5	6	7	8	9

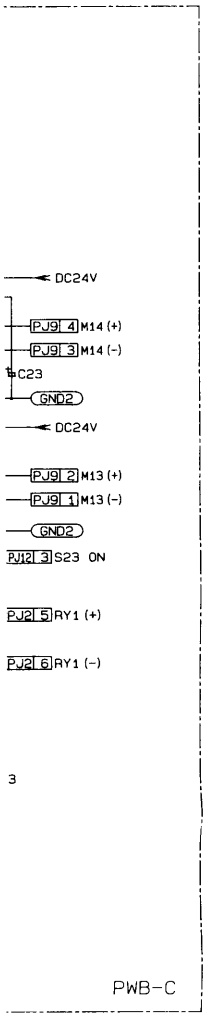

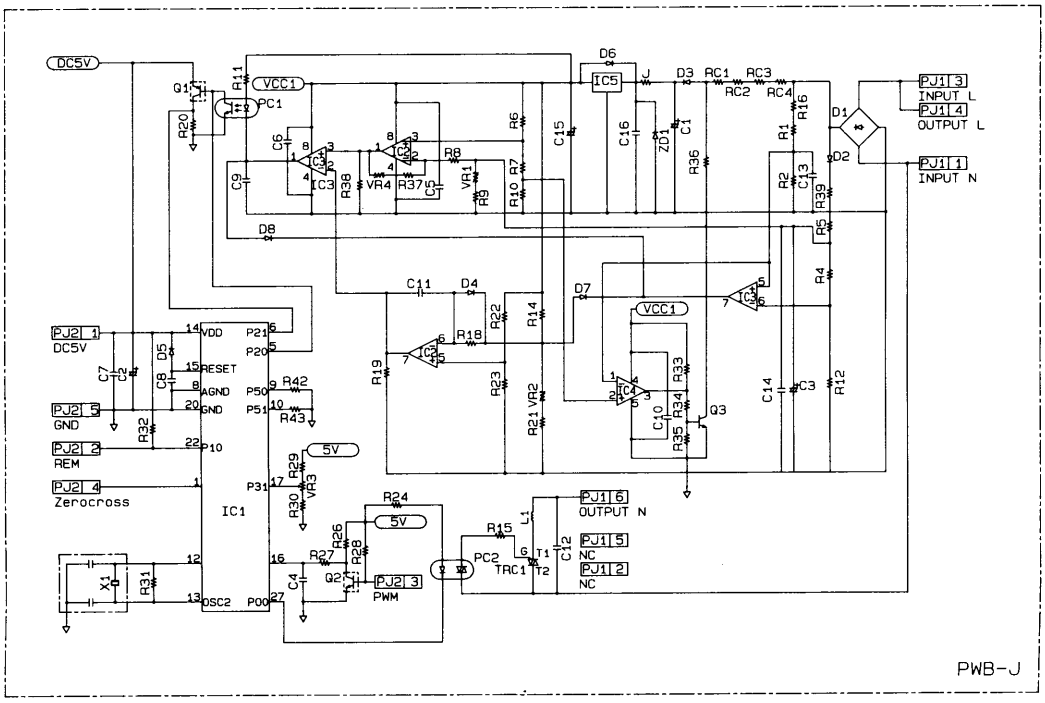

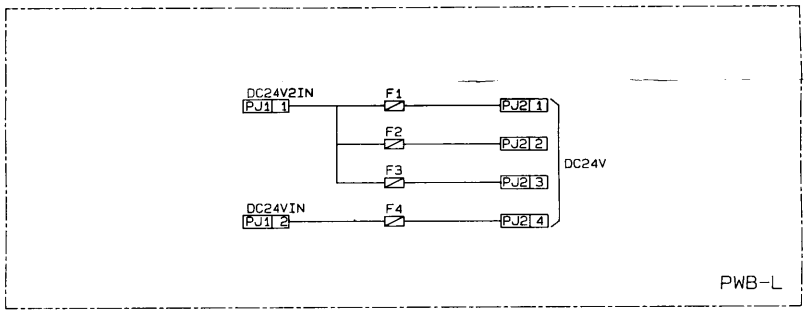

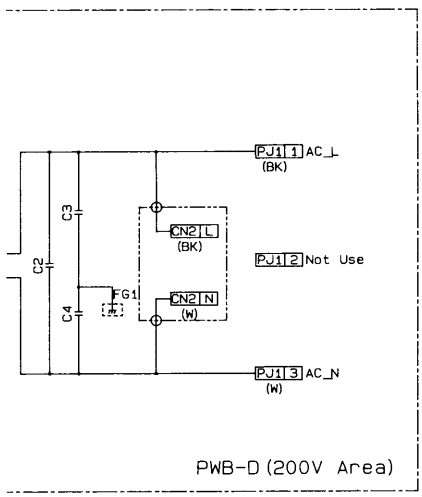

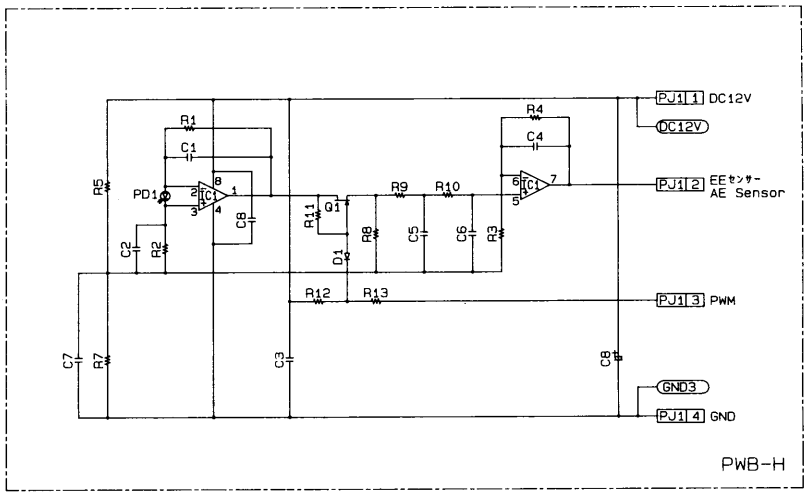

DWG.NO.	1156-B206-0A
TITLE	CIRCUIT DIAGRAM C, D, H, J, L
MODEL	EP5000/EP4000
VOLTAGE	AC100/115/120/127/ 200/220/240V
EFFECTIVE MACHINE NO.	XX0101 AND ONWARD
DATE ISSUED	Mar. 1997