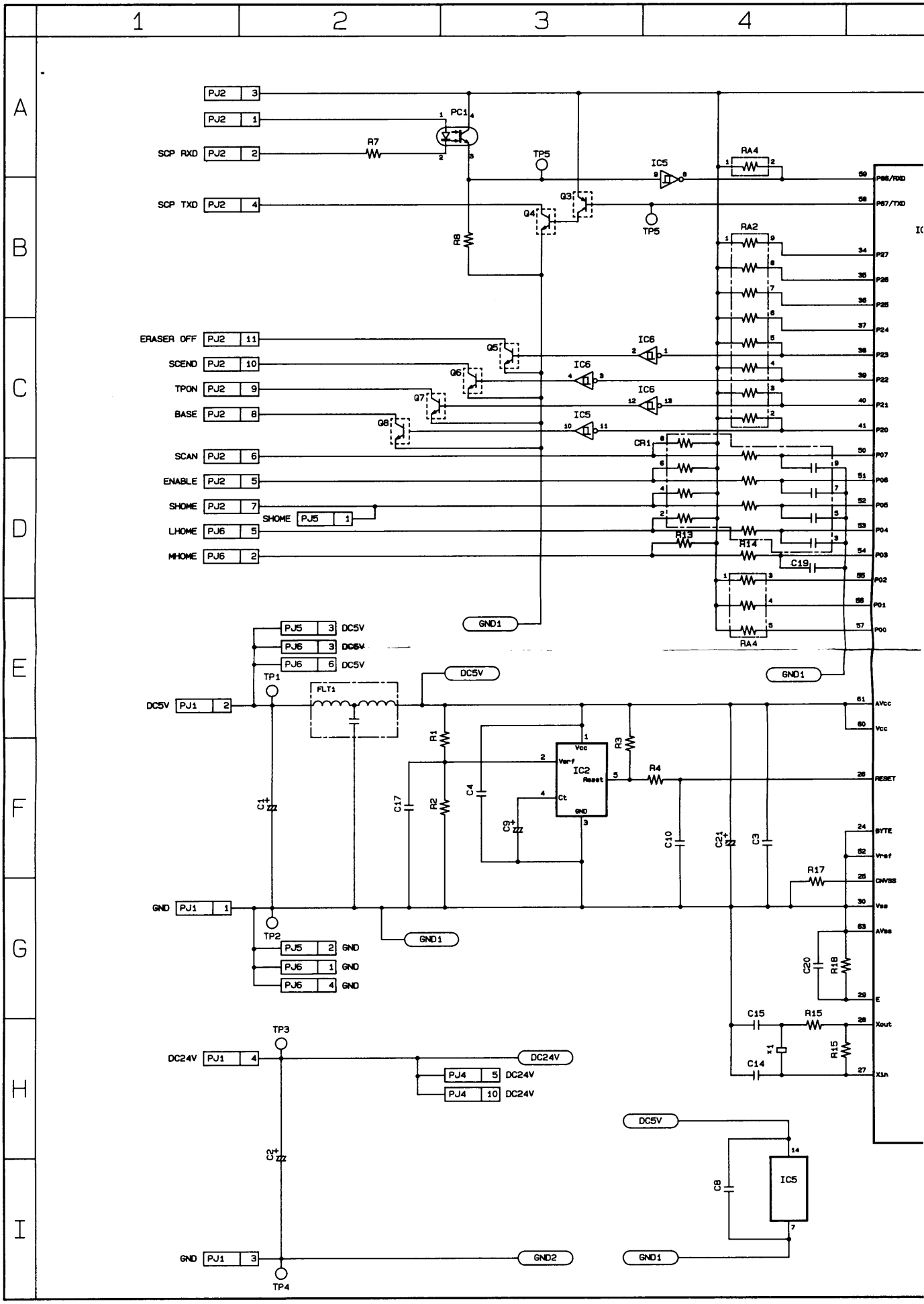
1
2
3
4
A
B
C
D
E
F
G
H
I
PJ2 3
PJ2 1
SCP RXD PJ2 2
SCP TXD PJ2 4
PC1
R7
R8
TP5
IC5
RA4
Q3
Q4
RA2
ERASER OFF PJ2 11
SCEND PJ2 10
TPON PJ2 9
BASE PJ2 8
Q5
Q6
Q7
Q8
IC6
SCAN PJ2 6
ENABLE PJ2 5
SHOME PJ2 7
SHOME PJ5 1
LHOME PJ6 5
MHOME PJ6 2
CR1
R13
R14
C19
GND1
PJ5 3 DC5V
PJ6 3 DC5V
PJ6 6 DC5V
TP1
FLT1
DC5V PJ1 2
DC5V
R1
R2
R3
R4
C1
C2
C3
C4
C9
C10
C17
C21
IC2
Vcc
Vref
Reset
Ct
GND
GND PJ1 1
TP2
PJ5 2 GND
PJ6 1 GND
PJ6 4 GND
GND1
R17
C20
R18
C15
R15
C14
X1
TP3
DC24V PJ1 4
DC24V
PJ4 5 DC24V
PJ4 10 DC24V
GND PJ1 3
GND2
TP4
C8
IC5
P96/RXD
P97/TXD
P27
P26
P25
P24
P23
P22
P21
P20
P07
P06
P05
P04
P03
P02
P01
P00
AVcc
Vcc
RESET
BYTE
Vref
CNVSS
Vss
AVss
E
Xout
Xin