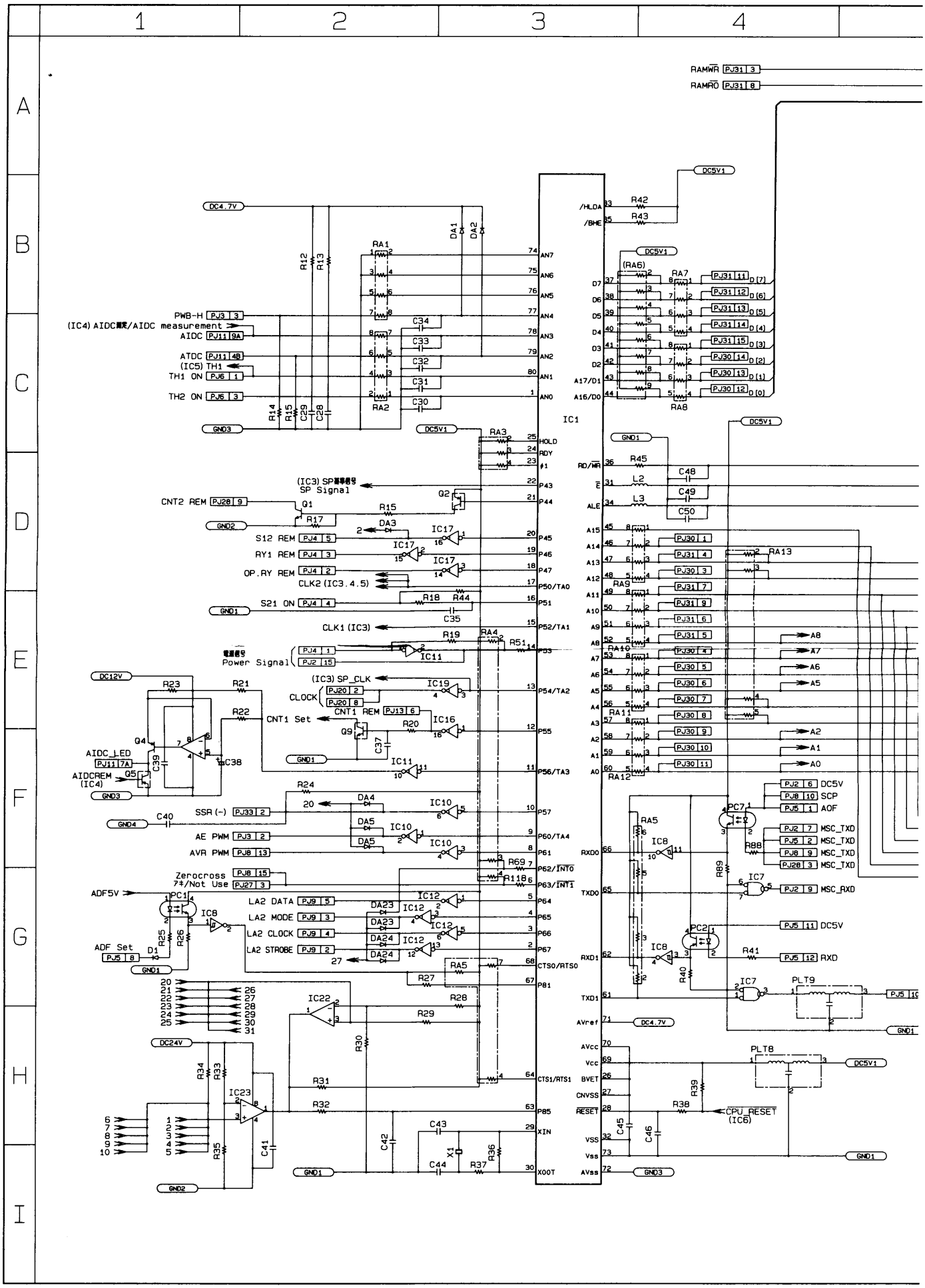
RAMWR PJ31 3
RAMRD PJ31 8
DC4.7V
DC5V1
GND1
GND2
GND3
DC12V
DC24V
IC1
PWB-H PJ3 3
(IC4) AIDC/AIDC measurement
AIDC PJ11 9A
ATDC PJ11 4B
(IC5) TH1
TH1 ON PJ6 1
TH2 ON PJ6 3
(IC3) SP Signal
CNT2 REM PJ28 9
S12 REM PJ4 5
RY1 REM PJ4 3
OP.RY REM PJ4 2
CLK2 (IC3.4.5)
S21 ON PJ4 4
CLK1 (IC3)
Power Signal
(IC3) SP_CLK
CLOCK
CNT1 REM PJ13 6
CNT1 Set
AIDC_LED PJ11 7A
AIDCREM (IC4)
SSR (-) PJ33 2
AE PWM PJ3 2
AVR PWM PJ8 13
Zerocross
ｱｲ/Not Use PJ27 3
ADF5V
ADF Set PJ5 8
LA2 DATA PJ9 5
LA2 MODE PJ9 3
LA2 CLOCK PJ9 4
LA2 STROBE PJ9 2
/HLDA
/BHE
RD/WR
E
ALE
RXD0
TXD0
RXD1
TXD1
AVref
AVcc
Vcc
BVET
CNVSS
RESET
VSS
Vss
AVss
XIN
XOUT
CPU_RESET (IC6)
PJ2 6 DC5V
PJ8 10 SCP
PJ5 1 AOF
PJ2 7 MSC_TXD
PJ5 2 MSC_TXD
PJ8 9 MSC_TXD
PJ28 3 MSC_TXD
PJ2 9 MSC_RXD
PJ5 11 DC5V
PJ5 12 RXD
PJ5 10