7-1. AIDC Sensor

To provide image stabilization control, this copier has AIDC Sensor PWB-G fitted to the Cleaning Unit of the Imaging Unit. The sensor is used to detect the toner density and background level on the PC Drum.

Operation

1: The PWB-G LED projects approx. 950-nm infrared light onto the surface of the PC Drum.
2: The PWB-G phototransistor detects the amount of light reflected back.
3: The phototransistor outputs a voltage corresponding to the intensity of the light reflected back.

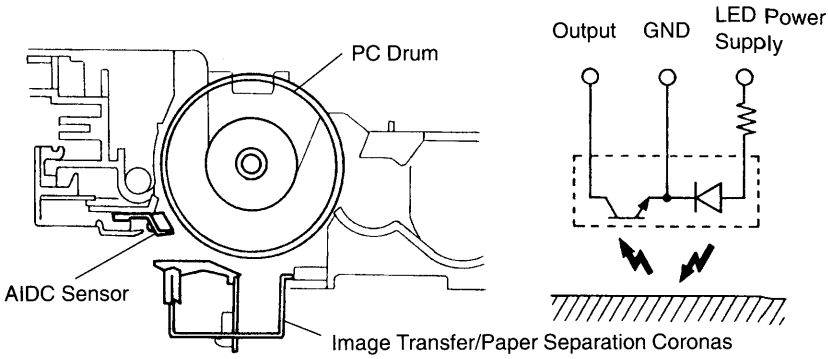

1149M005AA

Toner Density on PC Drum	Light reflected	Output Voltage
High	Small	High
Low	Large	Low