13-7. Sub Hopper Toner Empty Detection Control

- A toner-empty condition in the Sub Hopper is detected by the magnet fitted to the Sub Hopper Toner Empty Detecting Lever and Sub Hopper Toner Empty Switch S106.
- The Sub Hopper Toner Empty Detecting Lever rides on the eccentric cam fitted to the rear of the Sub Hopper Toner Agitating Lever. It is moved up and down as the eccentric cam is turned by the drive transmitted from Main Drive Motor M1.
- While the amount of toner in the Sub Hopper is higher than the predetermined level, the Sub Hopper Toner Empty Detecting Lever rests on the toner and does not make the up-and -down motion. S106 therefore remains deactuated.
- When the amount of toner in the Sub Hopper is lower than the predetermined level, the Sub Hopper Toner Empty Detecting Lever moves up and down by the eccentric cam. This result in S106 being actuated and deactuated. When the time S106 is actuated exceeds a predetermined value, the copier CPU determines that the Sub Hopper has run out of toner.

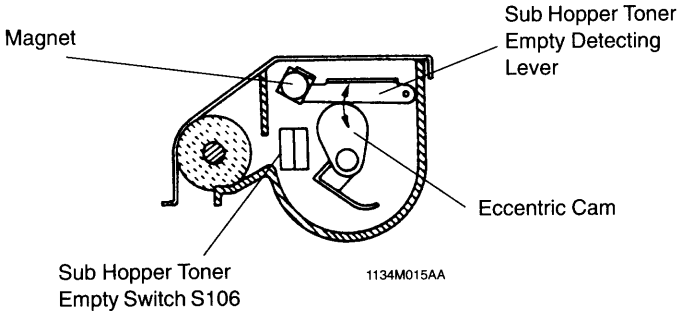

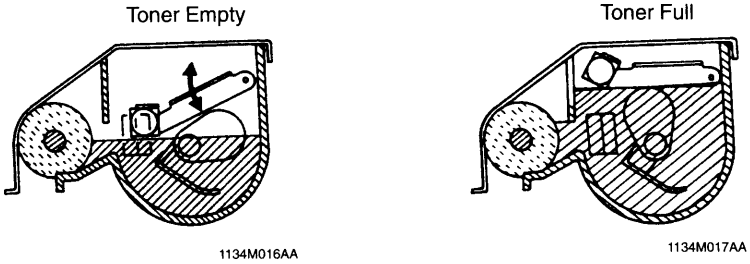

Controlled Part	Control Signal	ON	OFF	WIRING DIA-GRAM
Sub Hopper Toner Empty Switch S106	PJ11A-8B	L	H	2-L