# 19 MULTI BYPASS TABLE

## Construction

The Multi Bypass Table fitted to the Right Door of the copier, is integrated into the copier. It is constructed as follows.

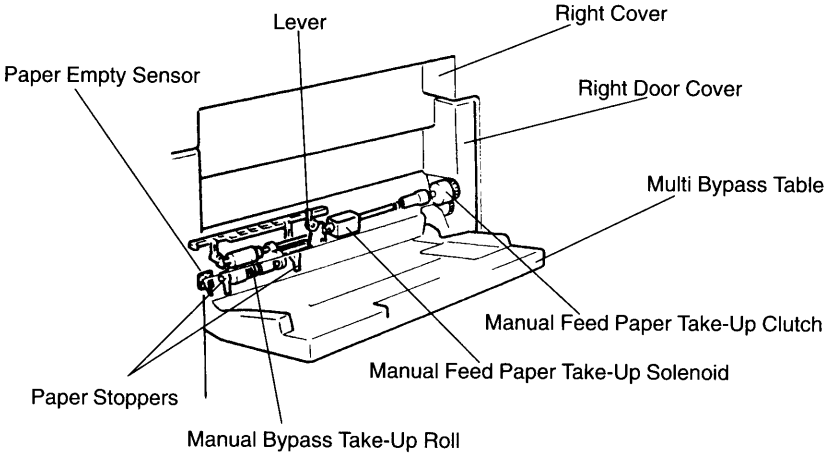


1136M045AA

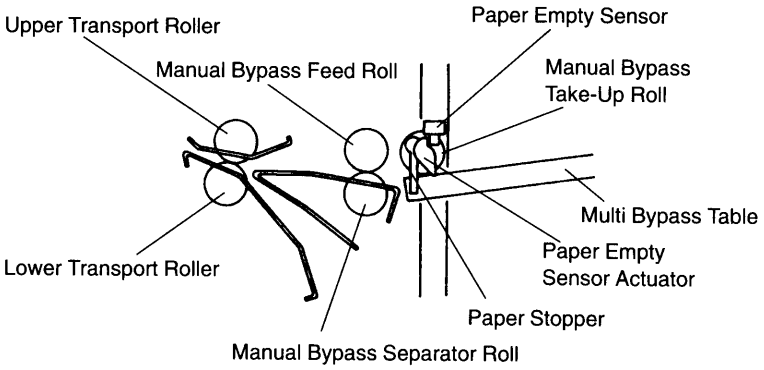


1136M088AA