19-3. Paper Empty Detection

The Multi Bypass Table is equipped with Manual Feed Paper Empty Sensor PC51 which detects a sheet of paper at the manual bypass port.

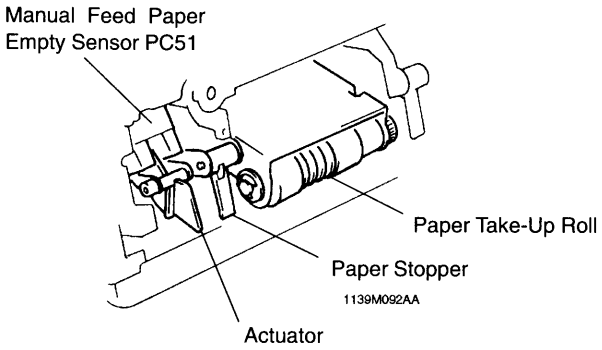

	Control Signal	Blocked	Unblocked	WIRING DIAGRAM
PC51	PWB-A PJ15A-14	H	L	32-O