1156SBM2101A

21-1. Synchronizing Roller Drive Mechanism

- The Upper Synchronizing Roller receives drive from Main Drive Motor M1 via a gear train and timming belt. The Upper Roller drives the Lower one.

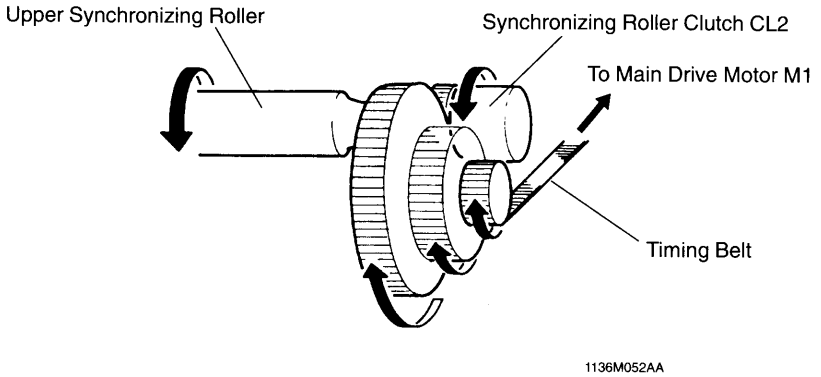

1156SBM2102A

21-2. Paper Dust Remover

The Paper Dust Remover is installed so that it makes contact with the Upper Synchronizing Roller. Since the Upper Synchronizing Roller is covered with a vinyl tubing, triboelectric charging occurs as the Roller turns in contact with the Paper Dust Remover. As paper is then fed between the Synchronizing Rollers, the charges on the tubing attract paper dust from the paper. The dust is then transferred onto the Paper Dust Remover.
The Paper Transport Rollers are also provided with a paper Dust Remover.

