2) Transport/Separator Misfeed

Relevant Electrical Parts	
• Transport Roller Sensor PC54 • Paper Leading Edge Detecting Sensor PC55 • Paper Transport Clutch CL1 • Synchronizing Roller Clutch CL2	• Separator Solenoid SL1 • Suction Fan Motor M4 • High Voltage Unit HV1 • Master Board PWB-A

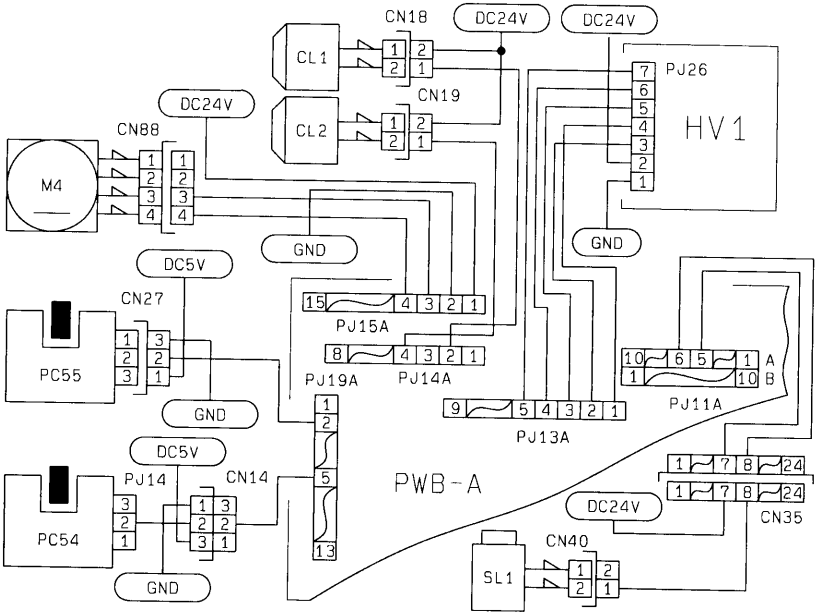

1156C02TAA