3) Multi Bypass Misfeed

Relevant Electrical Parts	
• Manual Feed Paper Empty Sensor PC51 • Manual Feed Paper Take-Up Solenoid SL51 • Manual Feed Paper Take-Up Clutch CL3	• Master Board PWB-A

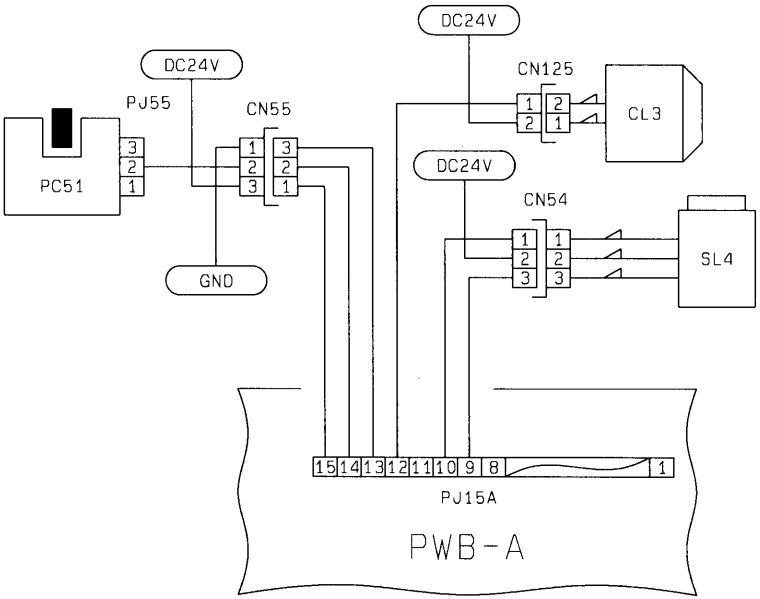

1156C03TAA