4) Fusing/Exit Misfeed

Relevant Electrical Parts	
• Paper Exit Switch S53	• Suction Fan Motor M4 • Master Board PWB-A

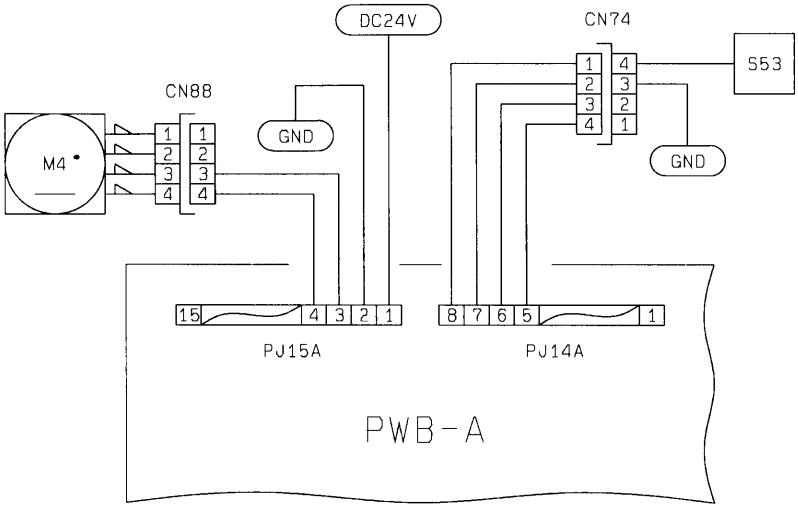

1156C04TAA