1156SBT030305A

5) PF-205 Paper Take-Up Misfeed

Relevant Electrical Parts	
• 3rd Drawer Paper Take-Up Sensor PC21 • 4th Drawer Paper Take-Up Sensor PC29 • Vertical Transport Sensor 3 PC17 • Vertical Transport Sensor 4 PC22	• 3rd Drawer Paper Take-Up Motor M22 • 4th Drawer Paper Take-Up Motor M23 • Vertical Transport Drive Motor M21 • PF-205 Master Board PWB-A • EP5000/EP4000 Master Board PWB-A

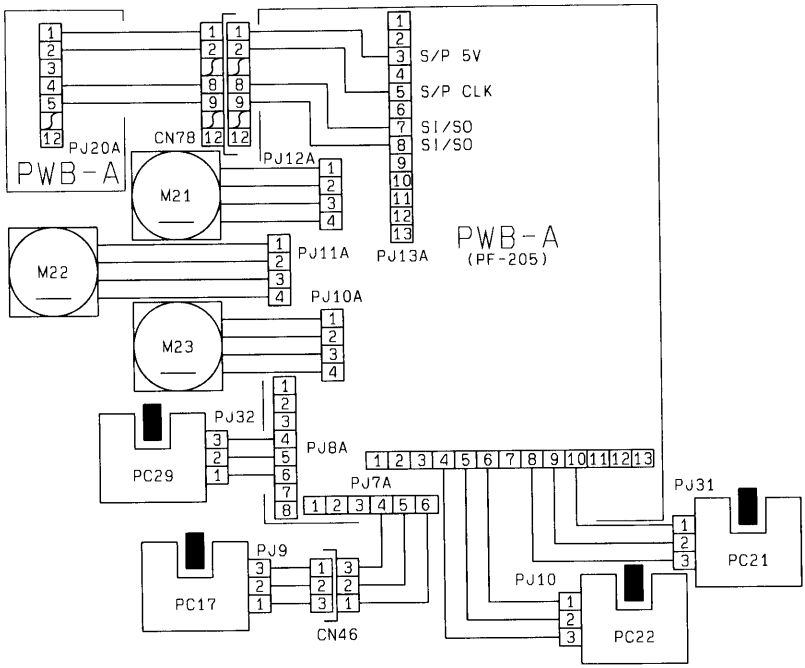

1156C24TAA