6) PF-105 Paper Take-Up Misfeed

Relevant Electrical Parts	
• 3rd Drawer Paper Take-Up Sensor PC21 • Vertical Transport Sensor 3 PC17 • Vertical Transport Sensor 4 PC22	• 3rd Drawer Paper Take-Up Motor M22 • Vertical Transport Drive Motor M21 • PF-105 Master Board PWB-A • EP5000/EP4000 Master Board PWB-A

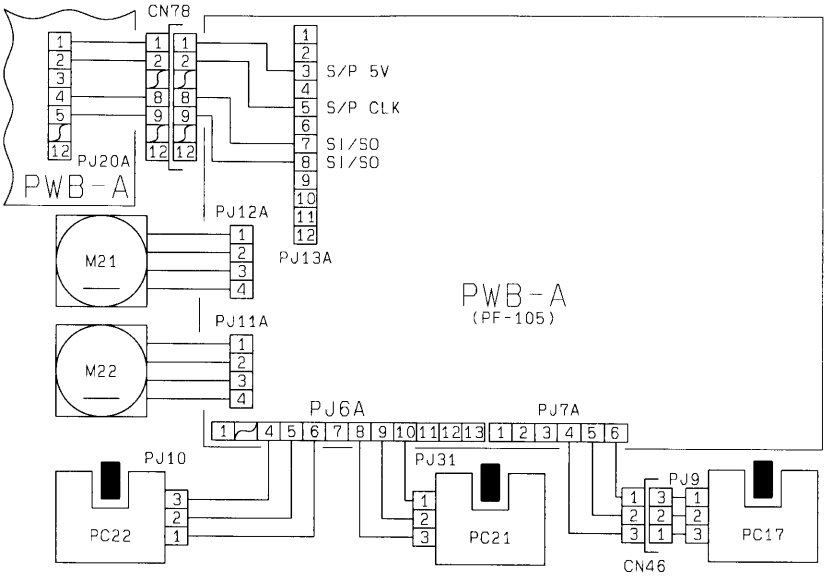

1156C26TAA