8) AD-9 Paper Take-Up Misfeed

Relevant Electrical Parts	
• Duplex Unit Paper Take-Up Sensor PC16	• Duplex Unit Pick-Up Solenoid SL33
• Vertical Transport Sensor 3 PC17	• Duplex Unit Master Board PWB-G
• Vertical Transport Drive Motor M21	• PF-205/105 Master Board PWB-A
• Duplex Unit Paper Take-Up Clutch CL31	• EP5000/EP4000 Master Board PWB-A

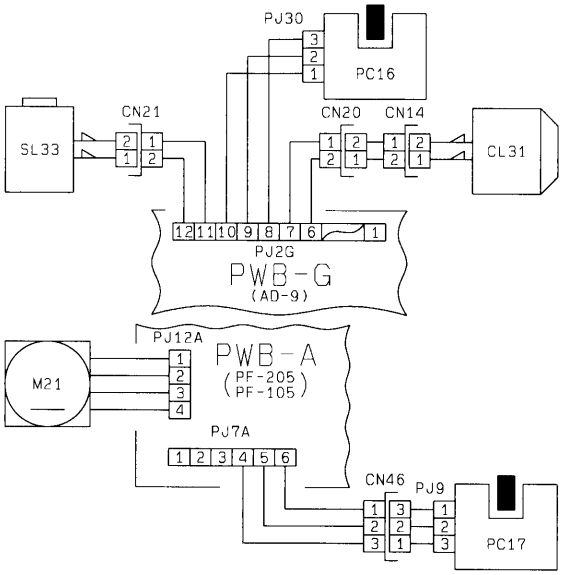

1156C31TAA