9) C0500: Warming-up Failure
C0510: Abnormally Low Fusing Temperature
C0520: Abnormally High Fusing Temperature

Relevant Electrical Parts	
• Fusing Heater Lamp H1 • Fusing Thermoswitch TS1 • Fusing Thermistor TH1 • Fusing Thermistor TH2	• Fusing Heater Lamp SSR SSR1 • Master Board PWB-A

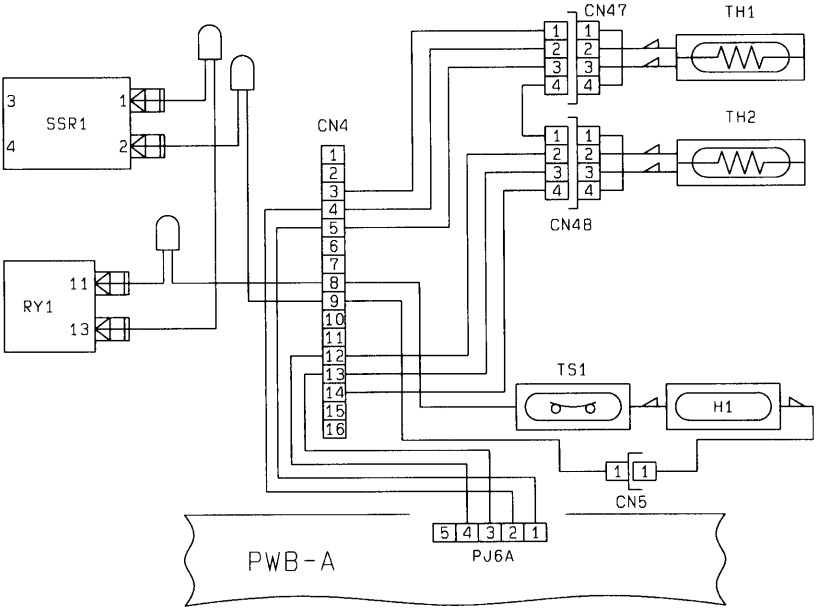

1156C12TAA