11) 0610: Lens Motor M6 Malfunction

0620: Mirror Motor M7 Malfunction

Relevant Electrical Parts	
• Mirror Reference Position Sensor PC86 • Lens Reference Position Sensor PC90 • Lens Motor M6 • Mirror Motor M7	• SCP Board PWB-F • Master Board PWB-A

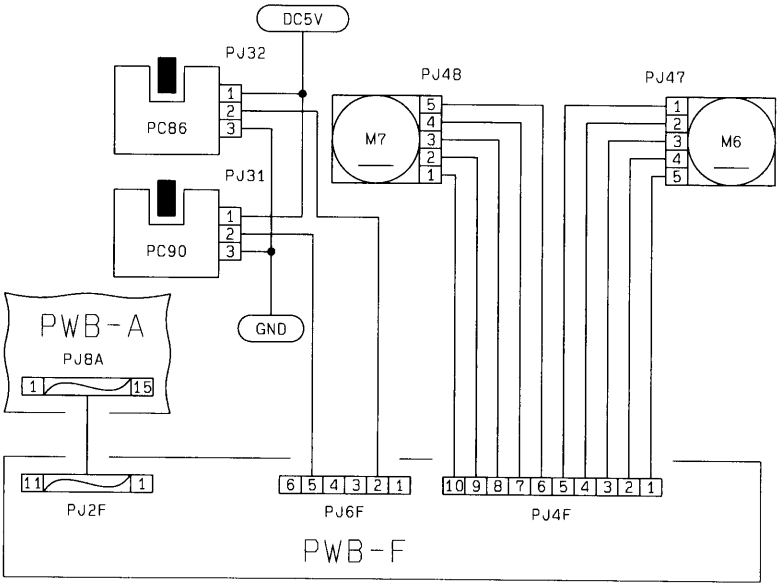

1156C14TAA