15) C0921: 1st Drawer Upward Motion Failure (Inch Areas)
C0922: 1st Drawer Downward Motion Failure
C0923: 1st Drawer Upward Motion Failure
C0926: 1st Drawer Ejection Failure

Relevant Electrical Parts	
• 1st Drawer Lift-Up Sensor PC65 • 1st Drawer Lower Limit Position Sensor PC69	• 1st Drawer Flexible Printed Circuit Board PWB-M1 • Master Board PWB-A

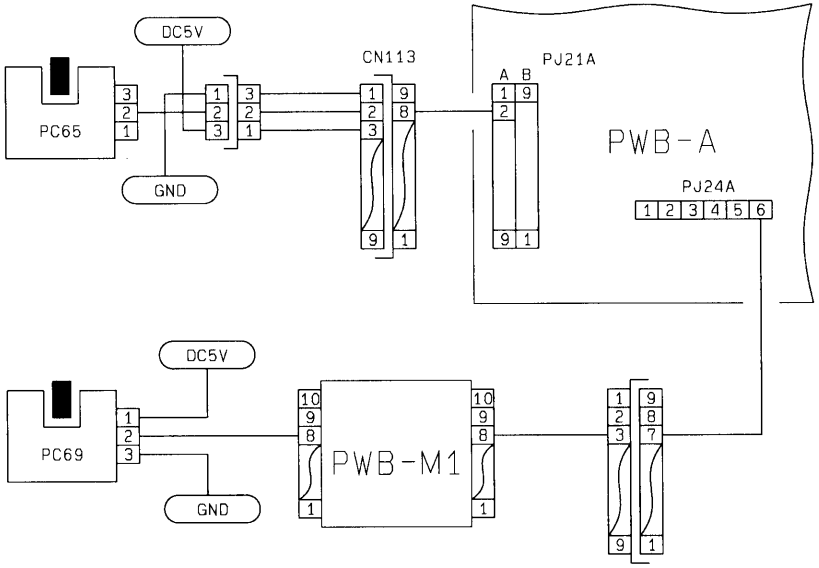

1156C36TAA