1156SBT040223A

23) C0E20: Image Erase Lamp LA3's Failure to Turn ON

Relevant Electrical Parts	
• Image Erase Lamp LA3	• Master Board PWB-A

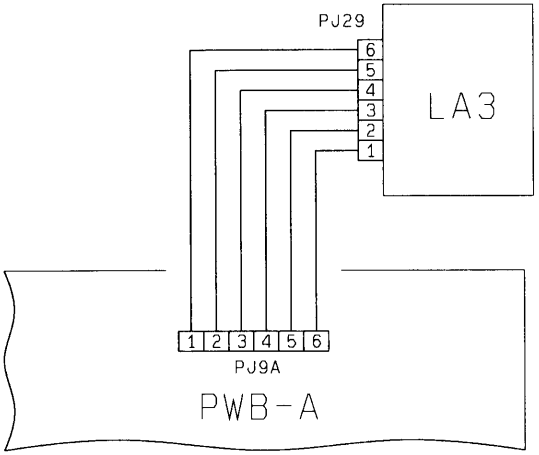

1156C23TAA

Step	Check Item	Result	Action
1	Perform the "Controller Board Check." Is malfunction code "C0314 to C0317" displayed?	YES	Change PWB-A.
2	Is the voltage across PWB-A PJ9A-1 and GND DC5V?	YES	Change LA3.
		NO	Check the 5V line.