4-3. Power Malfunctions

1156SBT040301A

1) Main Relay Does Not Turn ON.

Relevant Electrical Parts	
• Power Switch S1 • Main Relay RY1 • Power Supply Unit PU1	• Master Board PWB-A • Power Supply Board PWB-C • Noise Filter Board PWB-D

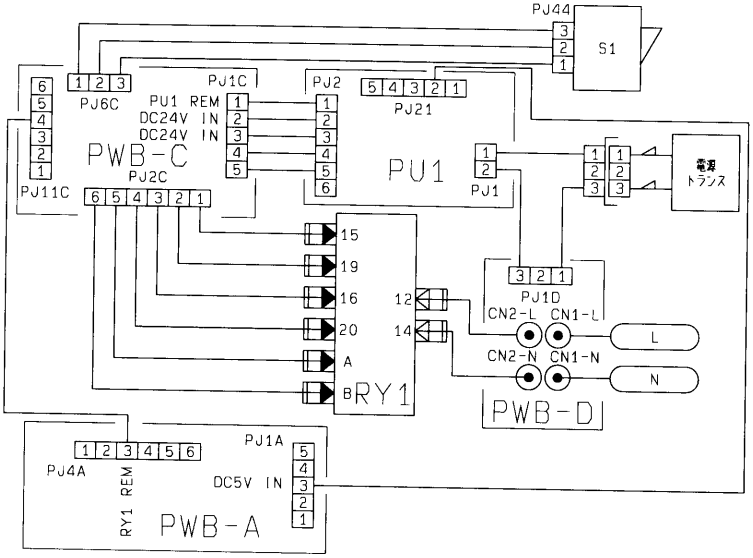

1156C20TAA