2) Main Relay Turns ON But the Control Panel Gives No Display.

Relevant Electrical Parts	
• Power Supply Unit PU1 • Control Panel UN1	• MSC Board PWB-B • Power Supply Board PWB-C

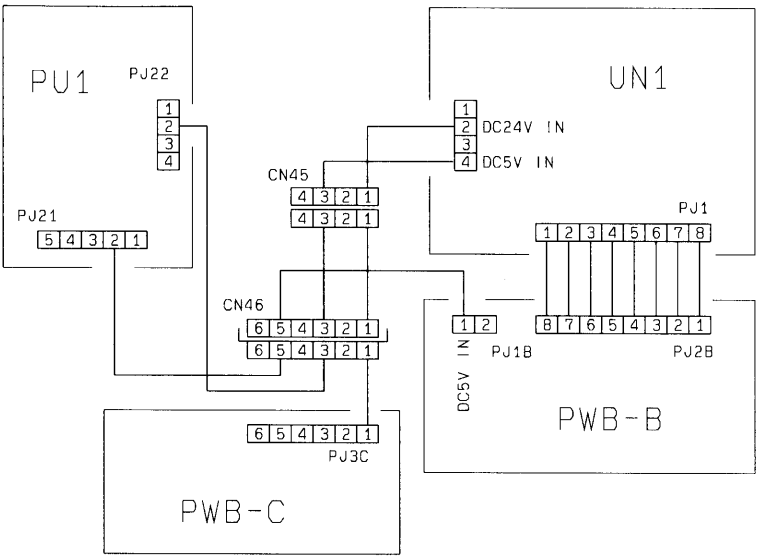

1156C21TAA

Step	Check Item	Result	Action
1	Is the voltage across PJ22-2 on PU1 and GND DC5V?	YES	Check the wiring between PU1 and UN1.
		NO	Change PU1.
2	Is the voltage across PJ21-2 on PU1 and GND DC5V?	YES	Check the wiring between PU1 and PWB-B.
		NO	Change PU1.
3	Is the voltage across PJ3C-1 on PWB-C and GND DC24V?	YES	Check the wiring between PWB-C and UN1.
		NO	Change PWB-C.
4	Is the connection between PWB-B and UN1 normal?	YES	Change PWB-B or UN1.
		NO	Correct the wiring or change the harness.