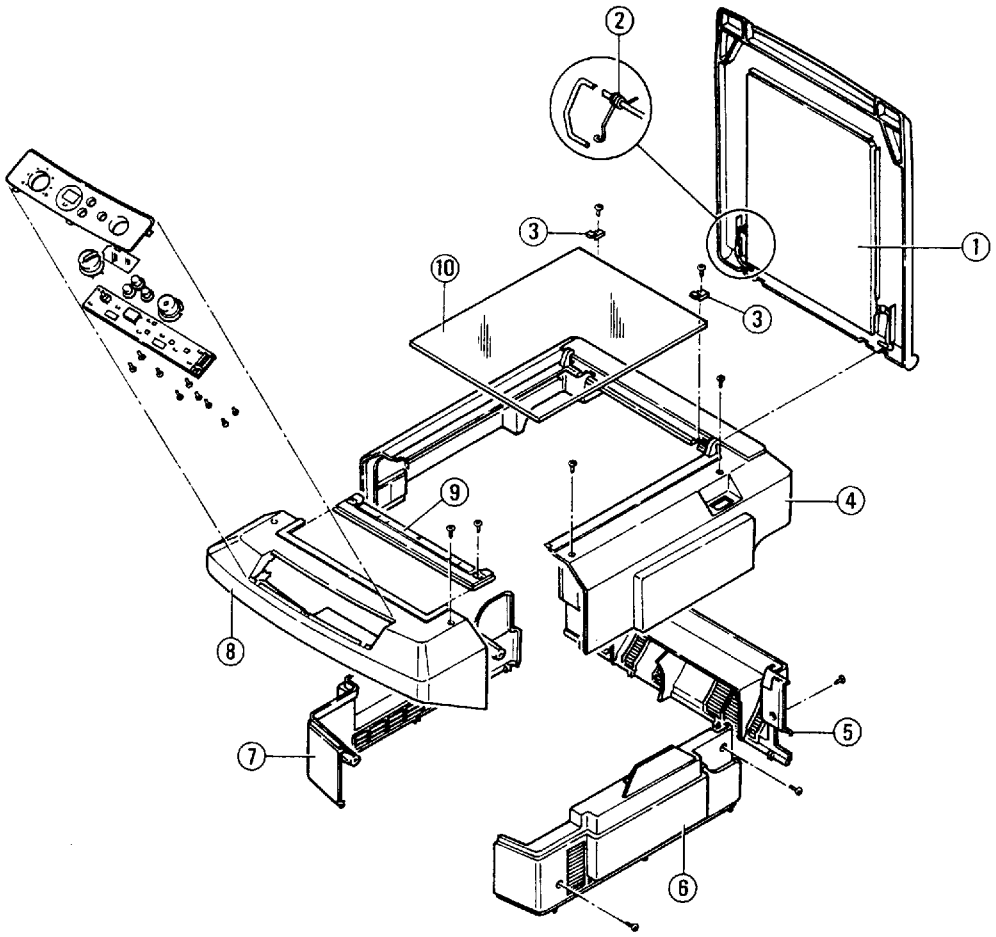

PARTS MANUAL **FIG. 1** **Housing / Verkleidungsteile** **EP-70**

INDEX	PART NO.	PART NAME	QTY	AREA	REMARKS	INDEX	PART NO.	PART NAME	QTY	AREA	REMARKS
01AA	4811-1332-01	SCANNER MAT ASSY	1								
02AA	4811-1328-01	SPRING	1								
03AA	4811-1363-03	GLASS PLATE HOLDER	2								
04AA	4811-1022-02	TOP COVER	1								
05AA	4811-1019-02	COVER REAR	1								
06AA	4811-1021-03	COVER RIGHT	1								
07AA	4811-1020-03	COVER LEFT	1								
08AA	4811-1023-02	FRONT COVER MINOLTA EP-70	1								
09AA	4811-1318-02	WIDTH SCALE	1								
10AA	4811-1317-02	SCANNER GLASS	1								