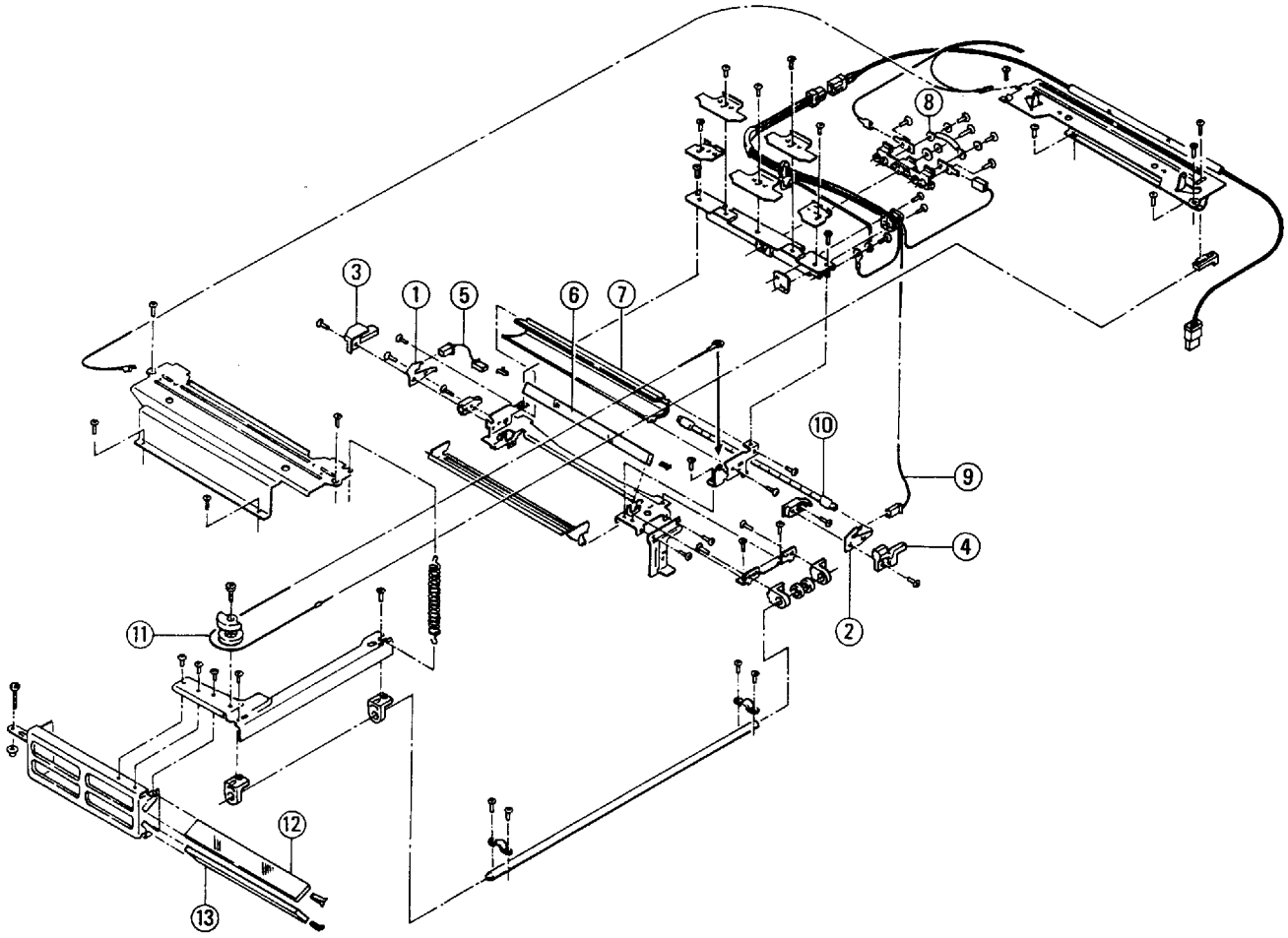

4

PARTS MANUAL **FIG. 2** **Upper Half (Scanner) / Oberteil Kopierer** **EP-70**

INDEX	PART NO	PART NAME	QTY	AREA	REMARKS	INDEX	PART NO	PART NAME	QTY	AREA	REMARKS
01AA	1067-1355-01	TERMINAL	1								
02AA	4811-1330-02	TERMINAL	1								
03AA	4811-1378-01	PROTECTION COVER LEFT	1								
04AA	4811-1339-01	PROTECTION COVER RIGHT	1								
05AA	1088-6810-01	HARNESS	1								
06AA	4811-1371-01	1 ST MIRROR	1								
07AA	1067-1507-02	REFLECTOR	1								
08AA	1088-0118-02	TEMPERATURE FUSE ASSY	1								
09AA	4811-6809-04	FLAT CABLE EXPOSURE LAMP	1								
10AA	4811-6504-01	EXPOSURE LAMP	1								
11AA	4811-2532-01	WIRE ROPE	1								
12AA	4811-1372-01	2 ND MIRROR	1								
13AA	4811-1373-01	3 RD MIRROR	1								