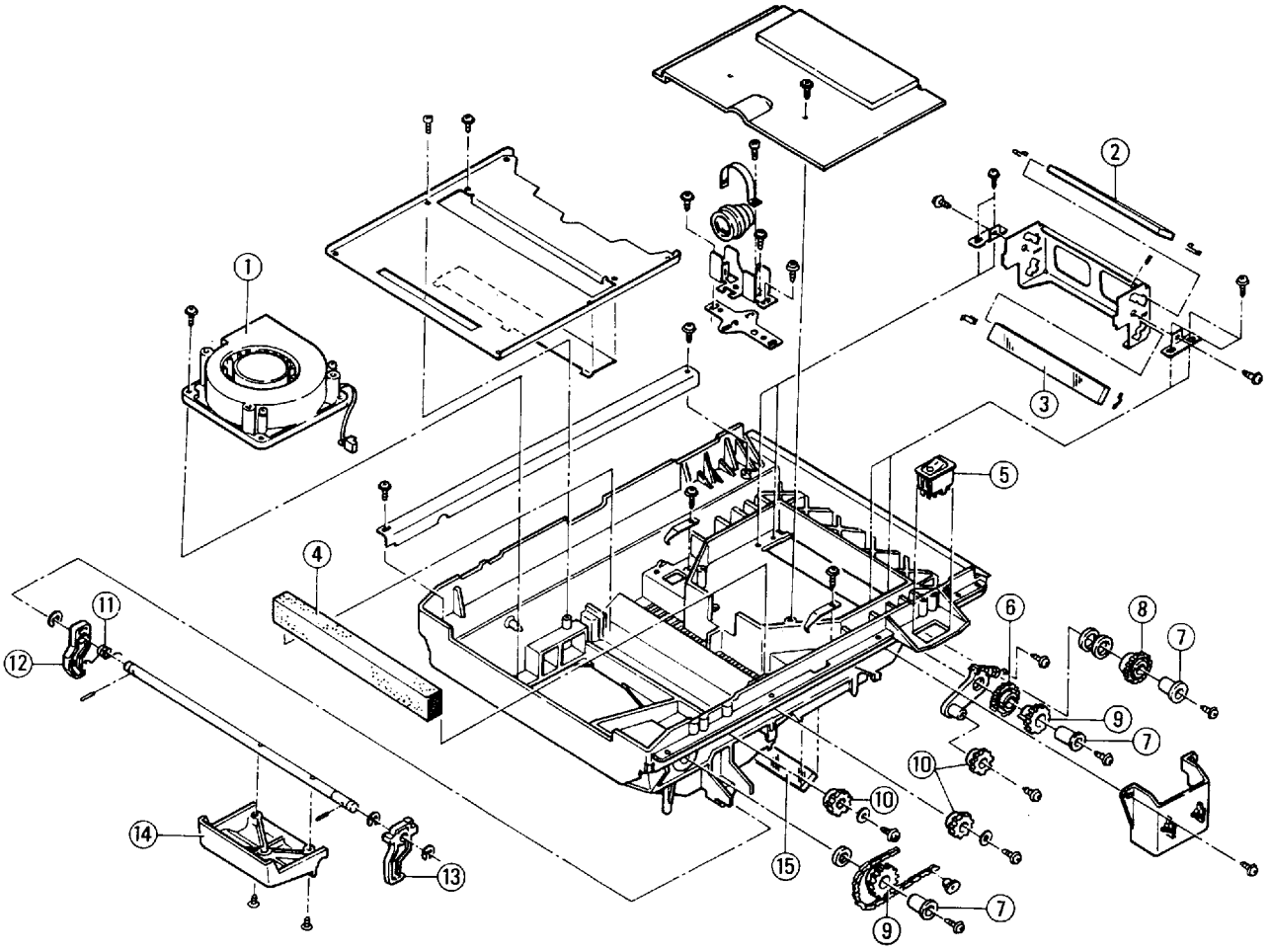

6

PARTS MANUAL **FIG. 3** **Optical Section Upr. / Optischer Bereich oben** **EP-70**

INDEX	PART NO	PART NAME	QTY	AREA	REMARKS	INDEX	PART NO	PART NAME	QTY	AREA	REMARKS
01AA	4811-6109-03	DC-FAN	1								
02AA	4811-1374-01	4 TH MIRROR	1								
03AA	4811-1375-01	5 TH MIRROR	1								
04AA	1088-2018-01	OZONE FILTER	1								
05AA	4811-9301-01	MAIN SWITCH UNLIGHTED	1								
06AA	4811-2523-01	GEAR T=46	1								
07AA	4811-2508-01	BUSHING	3								
08AA	4811-2569-03	IDLE GEAR T=39	1								
09AA	4811-2522-02	SPROCKET T=22	2								
10AA	4811-2536-01	SPROCKET T=15	3								
11AA	4811-2070-01	TORSION SPRING	1								
12AA	1067-2013-01	PAWL	1								
13AA	1067-2014-01	PAWL	1								
14AA	4811-2067-01	UNLOCKING HANDLE	1								
15AA	4811-1376-02	6 TH MIRROR	1								