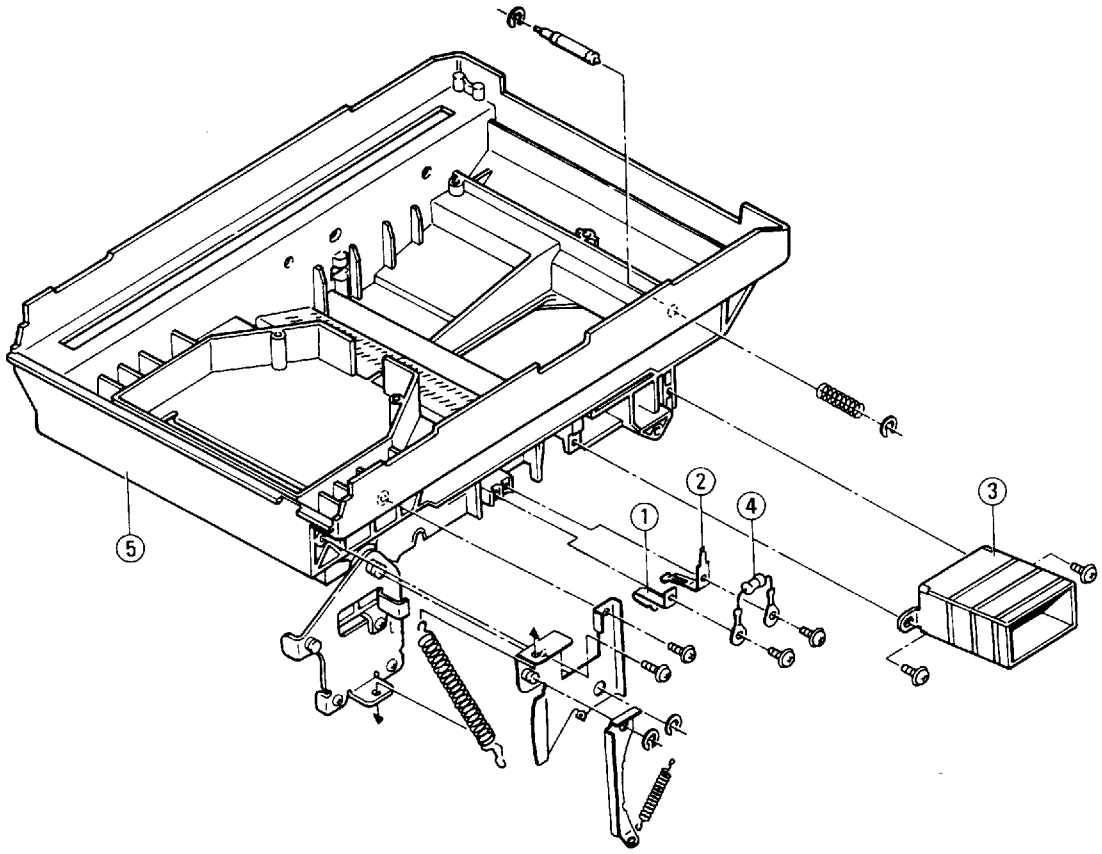

PARTS MANUAL **FIG. 4** **Optical Section Lwr. / Optischer Bereich unten** **EP-70**

INDEX	PART NO.	PART NAME	QTY	AREA	REMARKS	INDEX	PART NO.	PART NAME	QTY	AREA	REMARKS
01AA	4811-1340-01	GROUND CONTACT	1								
02AA	4811-1338-01	GROUND CONTACT	1								
03AA	4811-1355-02	EXHAUST CHANNEL	1								
04AA	4811-0321-01	CORONA RESISTOR	1								
05AA	4811-1301-03	OPTIC FRAME	1								