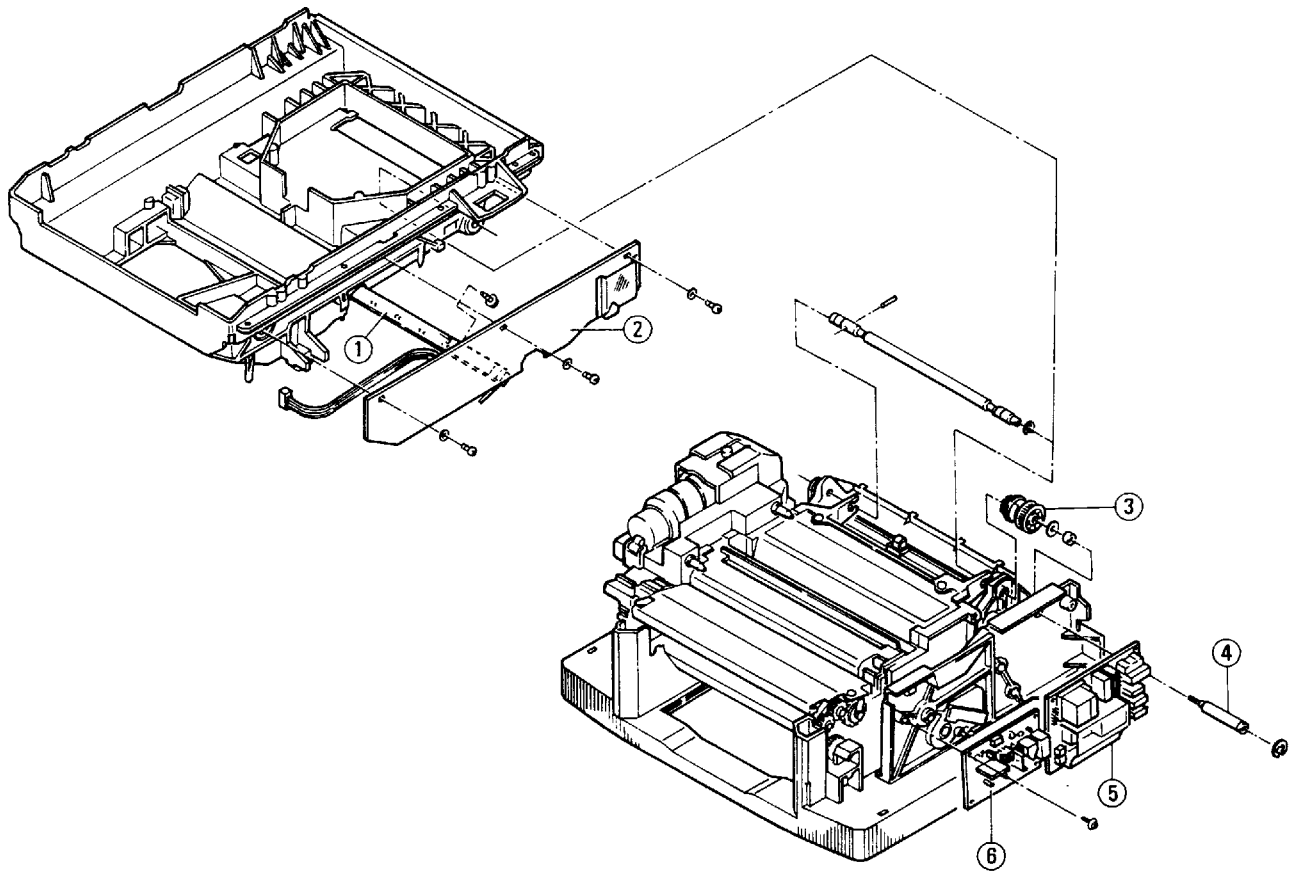

PARTS MANUAL **FIG. 5** **Lower Half I / Unterteil Kopierer I** **EP-70**

INDEX	PART NO	PART NAME	QTY	AREA	REMARKS	INDEX	PART NO	PART NAME	QTY	AREA	REMARKS
01AA	4811-8501-02	ERASER LAMP	1								
02AA	4811-0320-01	PWB-A LOGIC ASSY	1								
03AA	4811-0704-01	TORQUE LIMITER ASSY	1								
04AA	4811-2562-02	BEARING BOLT	1								
05AA	4811-0103-04	PWB-D	1								
06AA	4811-0107-03	HV 1	1								