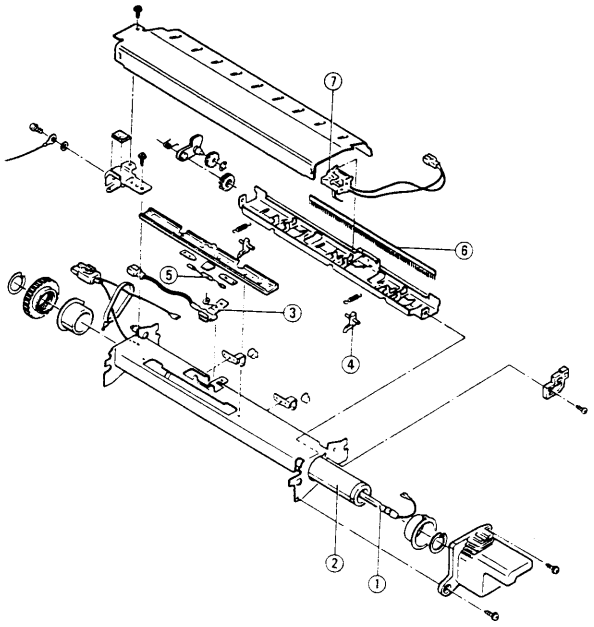

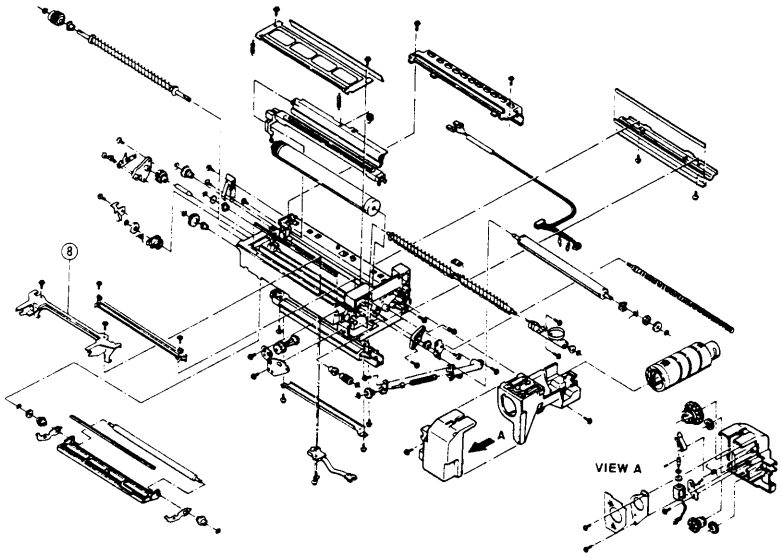

PARTS MANUAL **FIG. 7** **Fusing-, Imaging Unit / Fixier-, Entwickler-Einheit** **EP-70**

INDEX	PART NO	PART NAME	QTY	AREA	REMARKS	INDEX	PART NO	PART NAME	QTY	AREA	REMARKS
01AA	4811-6502-01	FUSING LAMP 230 V	1								
02AA	4811-5730-02	FUSING ROLLER	1								
03AA	9372-2010-15	THERMISTOR	1								
04AA	4811-5710-01	SEPARATOR	1								
05AA	1067-0391-02	TEMPERATURE FUSE	1								
06AA	1093-5784-01	NEUTRALIZING BRUSH	1								
07AA	9334-2010-12	REED SWITCH	1								
08AA	4811-5019-02	SUSPENSION BRACKET	1								