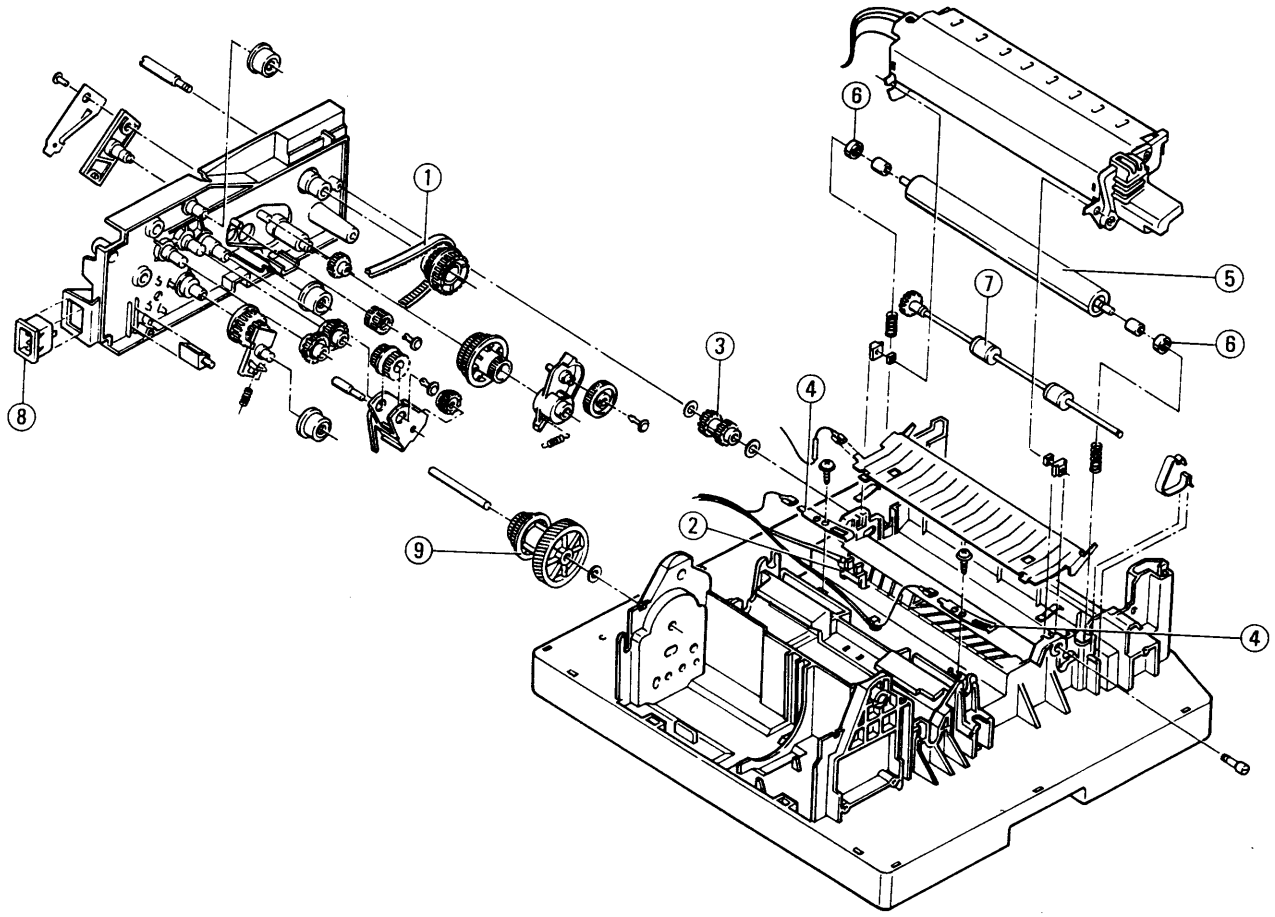

INDEX	PART NO	PART NAME	QTY	AREA	REMARKS
01AA	4811-2555-01	TIMING BELT T=286	1		
02AA	9335-1820-21	PHOTO INTERRUPTOR	1		
03AA	4811-2549-01	DOUBLE GEAR T=19/20	1		
04AA	4811-2031-01	GROUND CONTACT	2		
05AA	4811-5717-12	SILICONE ROLLER	1		
06AA	4811-5749-01	BALL BEARING	2		
07AA	1088-5723-01	PAPER EXIT ROLLER	1		
08AA	4811-9902-01	APPLIANCE INLET	1		
09AA	4811-0703-01	MAIN GEAR ASSY	1		

INDEX	PART NO	PART NAME	QTY	AREA	REMARKS