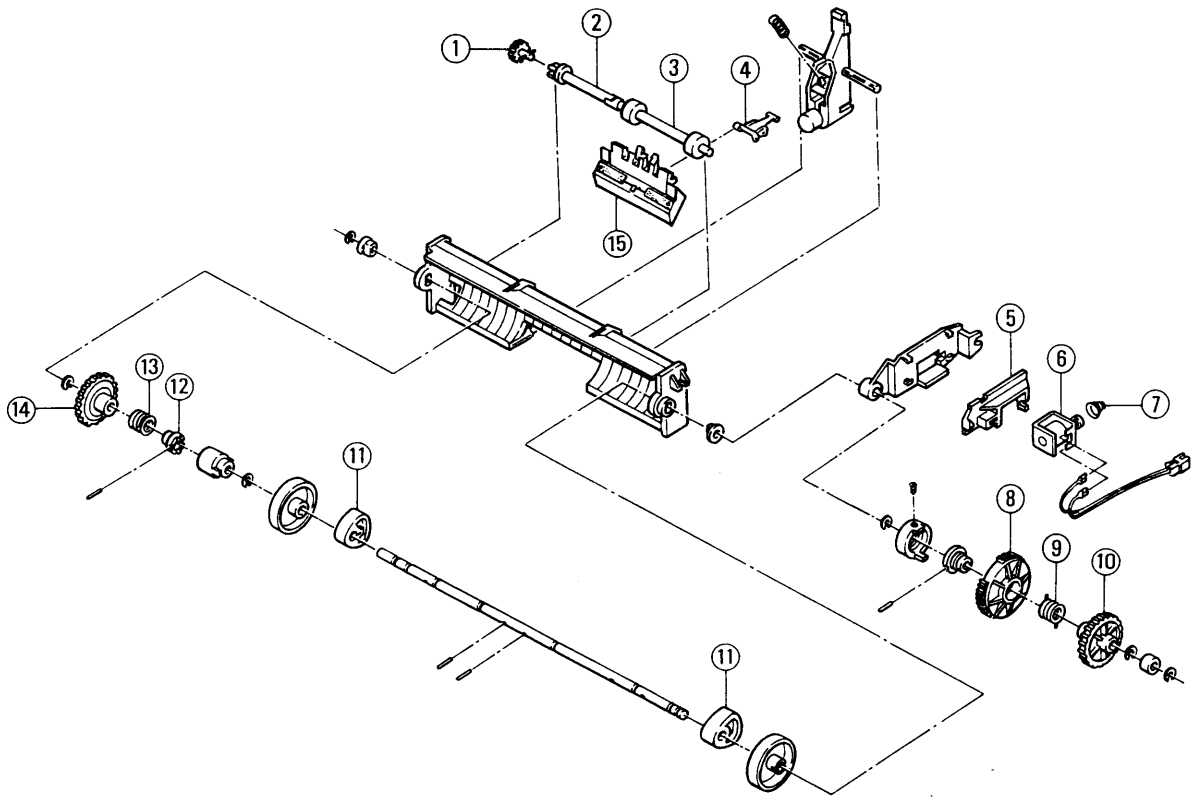

INDEX	PART NO	PART NAME	QTY	AREA	REMARKS	INDEX	PART NO	PART NAME	QTY	AREA	REMARKS
01AA	4811-3057-01	PINION T=13	1								
02AA	4811-3056-01	CONNECTION AXLE	1								
03AA	4811-3055-01	COUNTER PRESSURE AXLE	1								
04AA	311-2045-01	CLUTCH FORK	1								
05AA	4811-2583-01	STOPPER	1								
06AA	4811-6206-01	SOLENOID	1								
07AA	4811-2593-01	PRESSURE SPRING	1								
08AA	4811-2588-01	CLUTCH RING	1								
09AA	4811-2595-01	CLUTCH SPRING	1								
10AA	4811-2573-04	CLUTCH GEAR T=36	1								
11AA	4811-3018-02	FEEDER SEGMENT ASSY	2								
12AA	4811-3041-01	HUB	1								
13AA	1054-1453-01	TORSION SPRING	1								
14AA	4811-3037-02	GEAR T=40	1								
15AA	4811-0705-01	PRESSURE BRACKET ASSY	1								