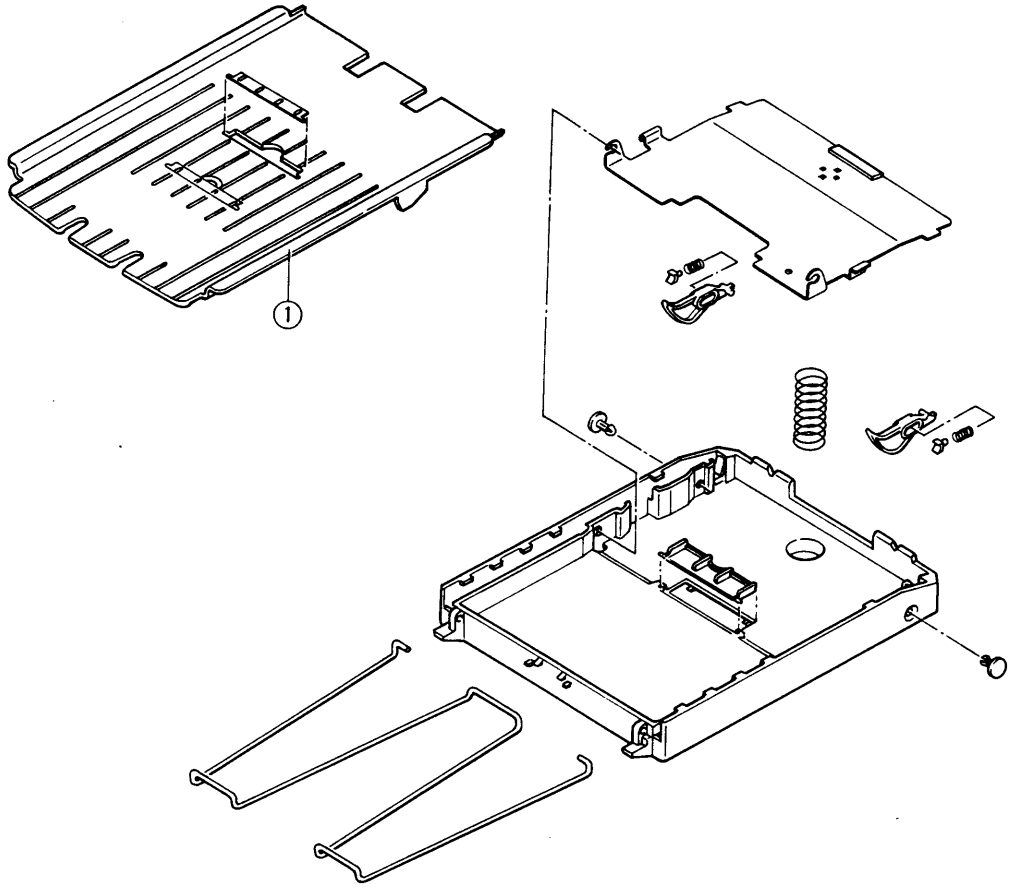

INDEX	PART NO.	PART NAME	QTY	AREA	REMARKS	INDEX	PART NO.	PART NAME	QTY	AREA	REMARKS
01AA	4811-0706-01	CASSETTE COVER ASSY	1								