7 PARTS IDENTIFICATION

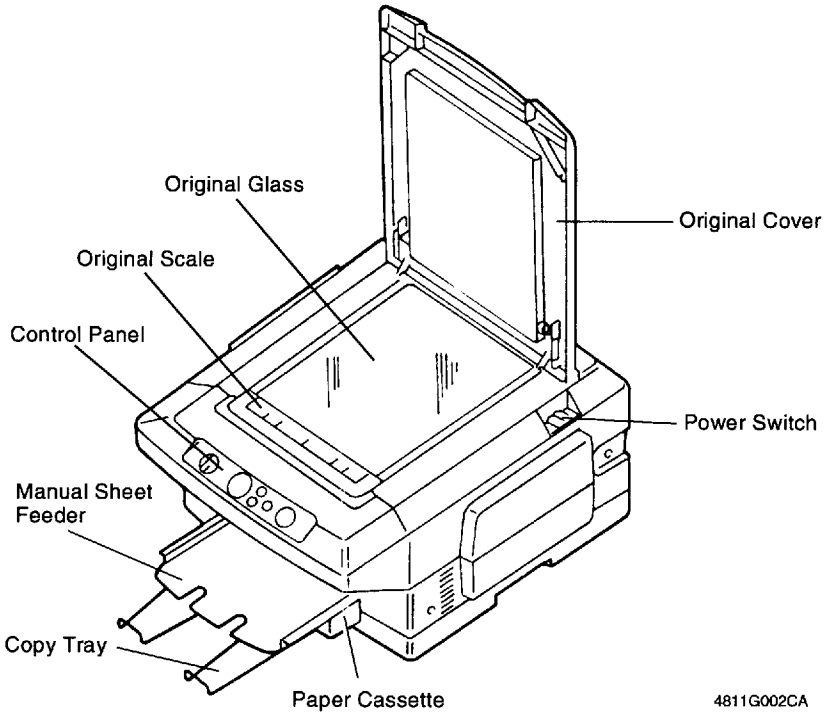

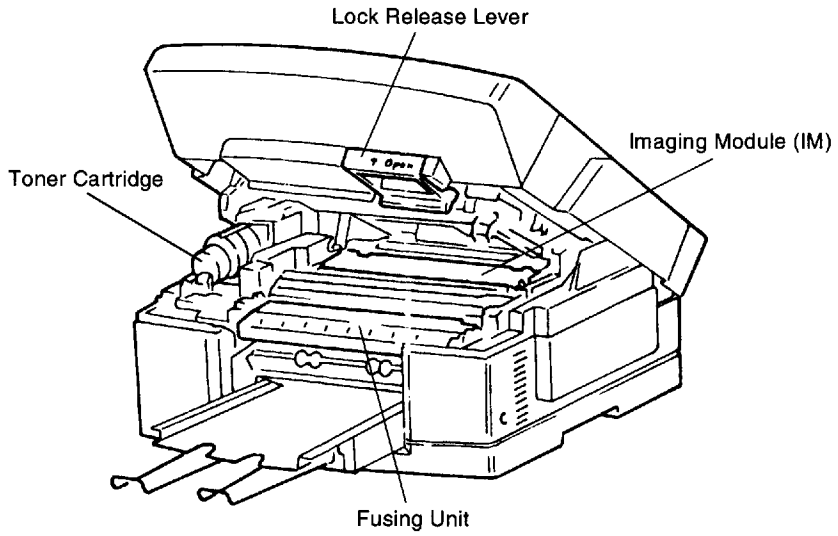

8 CONTROL PANEL

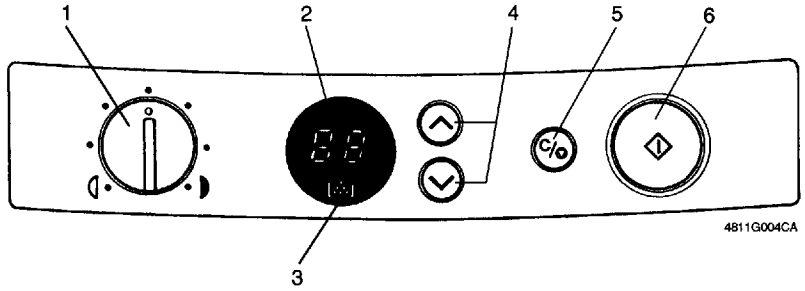

1. Exposure Control Knob
- Turn to set the exposure level.

2.Multi-Functional Display
- Shows the following information:
  - Warming-up state ... Blinking "1"
  - Number of Copies set to be made ... "1" to "49"
  - Paper Empty ... "P"
  - Paper Jam..."PJ"
  - Copier opened ... "U5"
  - Trouble Code ... "C or E" and trouble Code number
  - Function Mode
    ... "F" and function mode number
  - Adjustment Mode
    ... "A" and adjustment mode number
  - End of drum life
    ... Displays the PC Drum life... "du" / "Su"
  - Copy Counter
    ... Displays the number of copies made

For more information, see the Function/Adjustment Mode Section.

3. Add Toner Indicator
- Lights up when toner in the Toner Cartridge runs out, prompting the user to replace the Toner Cartridge with a new one.