1 CROSS-SECTIONAL VIEW

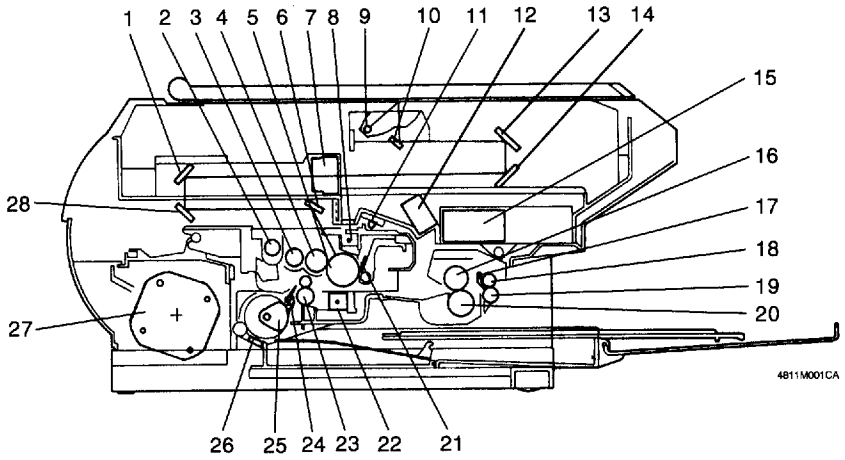

1. 4th Mirror
2. 2nd Developer Mixing Screw
3. 1st Developer Mixing Screw
4. Sleeve/Magnet Roller
5. PC Drum
6. 6th Mirror
7. Lens
8. PC Drum Charge Corona
9. Exposure Lamp
10. 1st Mirror
11. Erase Lamp
12. Ozone Filter
13. 2nd Mirror
14. 3rd Mirror
15. Scanner Cooling Fan Motor
16. Upper Fusing Roller
17. Paper Exit Switch
18. Paper Exit Rolls
19. Paper Exit Roller
20. Lower Fusing Roller
21. Cleaning Blade
22. Image Transfer Corona
23. Synchronizing Roller
24. Paper Leading Edge Sensor
25. Paper Feed Roller
26. Paper Separator Pad
27. Main Drive Motor
28. 5th Mirror

2 COPY PROCESS

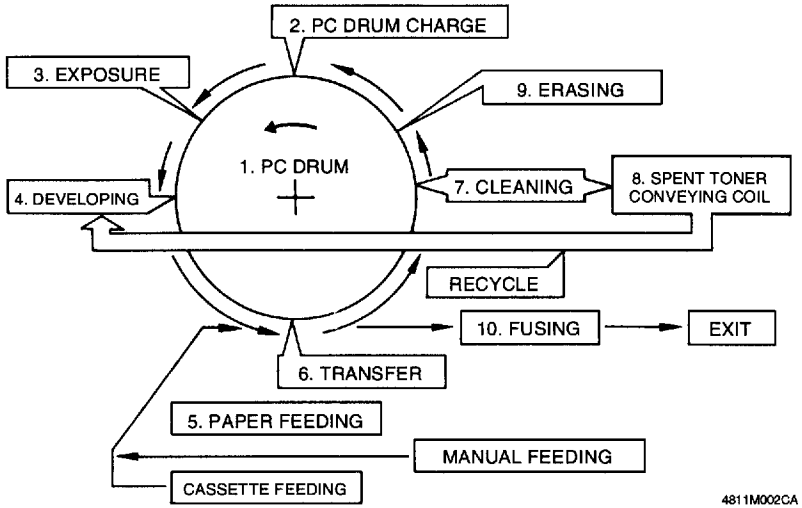

1. PC Drum

- The PC Drum is an aluminum cylinder coated with a photosensitive semiconductor. It is used as the medium on which a visible developed image of the original is formed.

2. PC Drum Charge

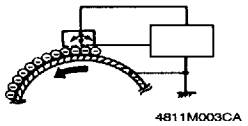

- The PC Drum Charge Corona Unit is equipped with a single wire and a Scorotron Grid. The negative corona emission from the wire is used to charge the surface of the PC Drum. The Scorotron Grid functions to control the potential of that charge and to ensure that the charge level is maintained evenly across the entire surface of the PC Drum.

3. Exposure

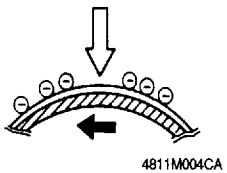

- Light from the Exposure Lamp striking the white and halftone areas of the original is reflected onto the PC Drum. The level of the negative charges on the surface of the PC Drum which are struck by light is reduced in accordance with the intensity of that light. Charges remaining on the surface of the PC Drum form the electrostatic latent image.