2. Developing Unit Drive

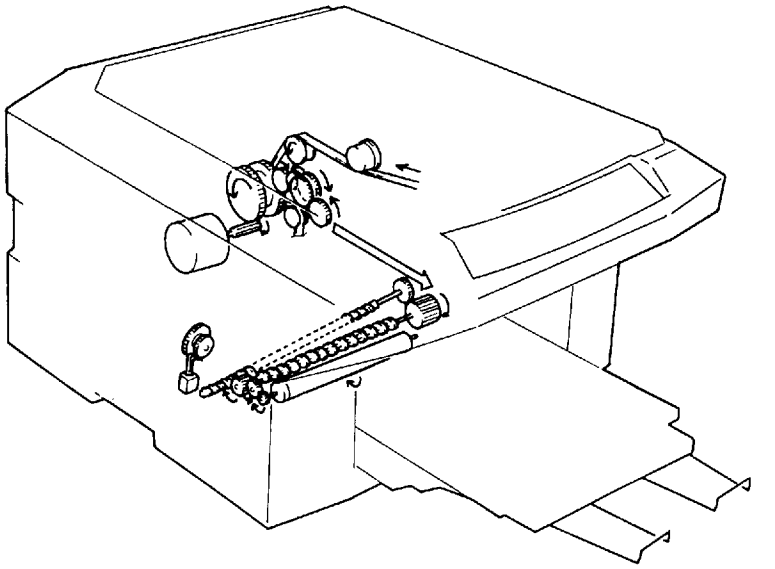

4811M008CA

3. Synchronizing Roller Drive

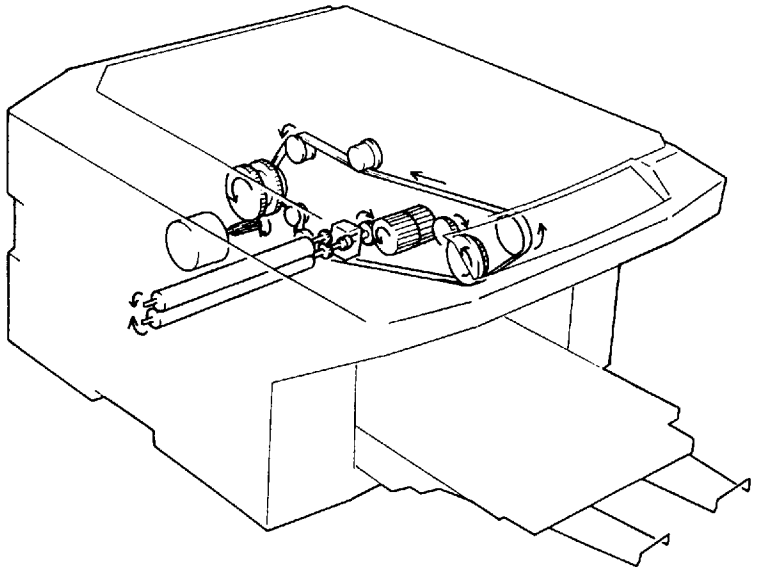

4811M009CA

4. PC Drum Drive

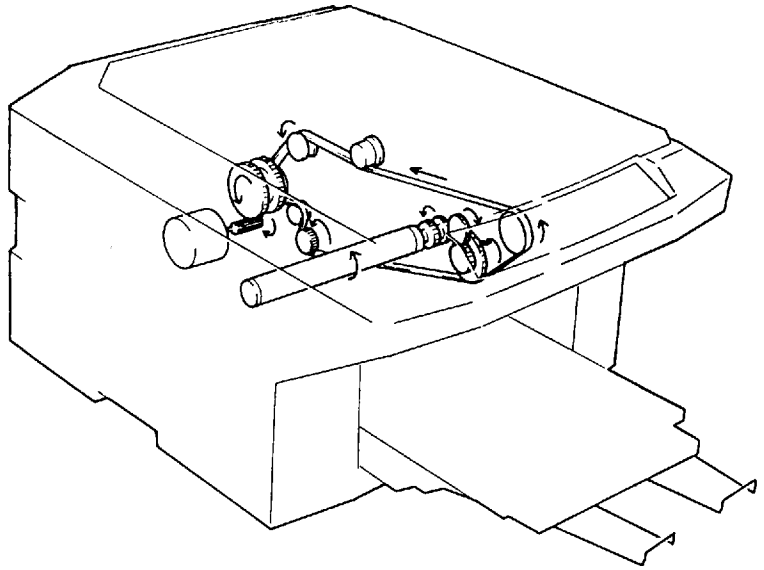

4811M010CA

5. Fusing Unit Drive

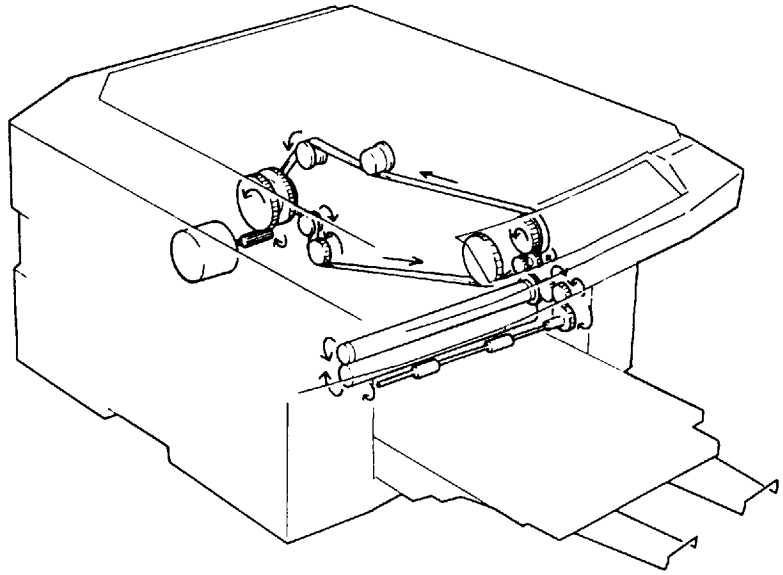

4811M011CA