6. Paper Feed Drive

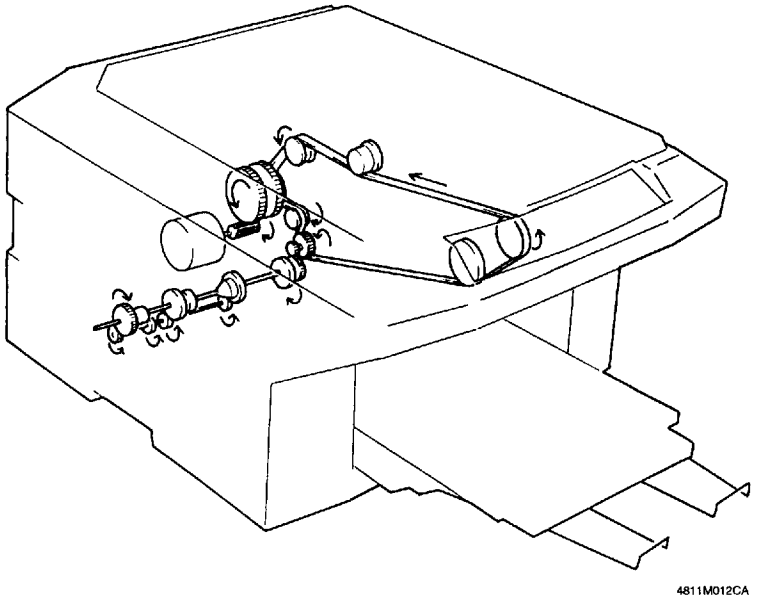

4 SWITCHES AND SENSORS

Symbol	Name	Function	Signal
S1	Power Switch	Turns ON and OFF all supply of power to the copier	
S1A on PWB-A	Open Detecting Switch	Detects that the Upper Half of the Unit is open.	
PC11 (B1) on PWB-A	Scanner Home Position Sensor	Detects the home position of the Scanner and the timing of feed start.	
PC12 (B2) on PWB-A	Scanner Synchronizing Position Sensor	Detects the scan position of the Scanner and timing at which the Synchronizing Rollers are started.	
PC2	Paper Leading Edge Sensor	Detects the leading and trailing edges of a sheet of paper and serves also as a jam sensor.	L : No Paper Present H : Paper Present
S53	Paper Exit Switch	Detects the leading and trailing edges of a sheet of paper and serves also as a jam sensor.	L : No Paper Present H : Paper Present

