5 IMAGING MODULE (IM)

- This copier is equipped with what we call an Imaging Module, or IM, which integrates a Toner Replenishing mechanism, Developing mechanism, PC Drum, PC Drum Charge Corona, Image Transfer Corona, Cleaning Unit, and Toner Recycling mechanism into one assembly. The life of the IM is 25,000 copies.

5-1. PC DRUM

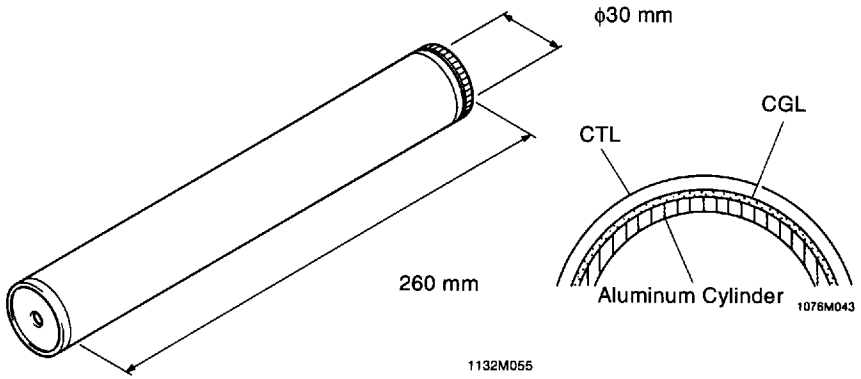

5-1-1. PC Drum

- The OPC, or Organic Photoconductor Drum used in this copier is small in diameter (30 mm), ensuring good paper separation. It consists of two distinct organic photoconductive layers on an aluminum alloy base: the outer layer is called the Carrier Transport Layer (CTL) and the inner the Carrier Generating Layer (CGL).
- During the period of initial use, this Organic Photoconductor has a glossy, wine-red surface. Since, however, the degree of hardness of this surface is rather low, faint lines corresponding to the edges of the paper will appear around the surface of the Drum after several tens of copies have been made. These lines will, however, in no way affect image quality.
- This photoconductor exhibits greatest light fatigue after being exposed to strong short and long wavelength light over an extended period of time. It is therefore necessary to protect the Drum with a Drum Cloth immediately after the IM has been removed from the copier.

5-1-2. PC Drum Drive

- The PC Drum is driven from the Main Motor via the gears, belts and pulleys. For details, see Section 3. DRIVE SYSTEM.

5-1-3. Grounding of the PC Drum

- The PC Drum is grounded through its Ground Spring, Drum Holding Shaft, Ground Plate and Harness to the Ground Plate of the Copier.

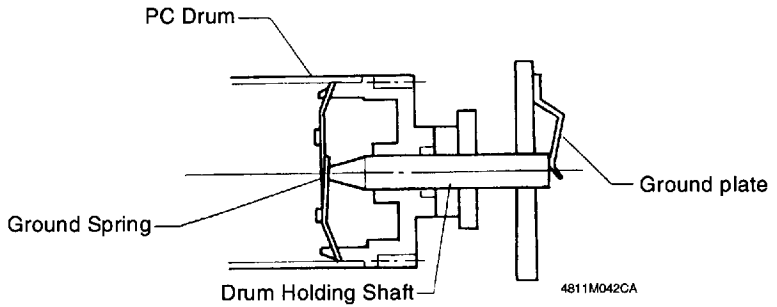

5-2. PC DRUM CHARGING

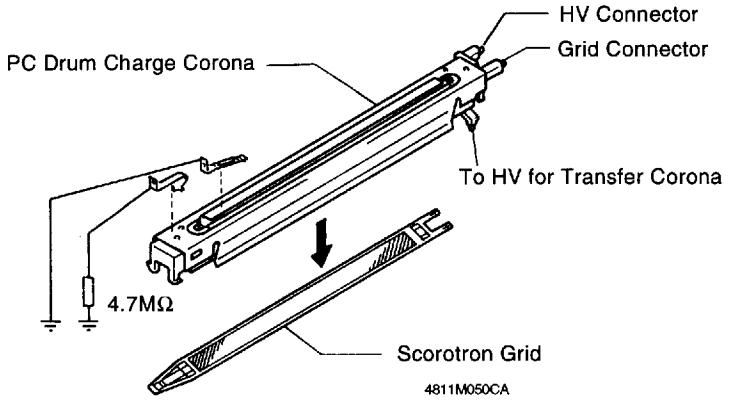

5-2-1. PC Drum Charge Corona

- The PC Drum Charge Corona in this copier is equipped with a Scorotron Grid which ensures that an even charge is deposited across the entire surface of the PC Drum.