5-3. DEVELOPMENT

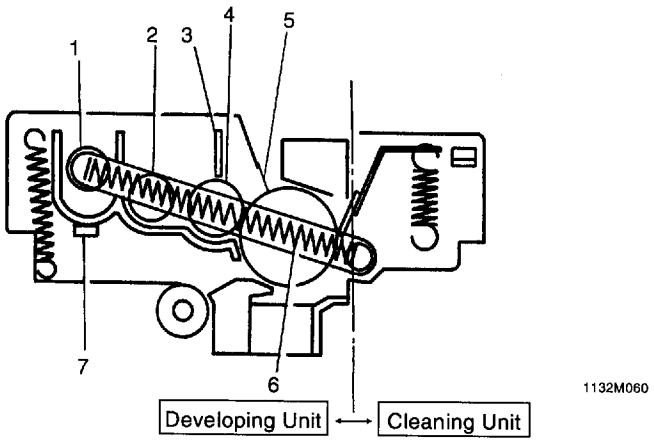

5-3-1. Developing Unit: Components and Their Functions

1. **2nd Developer Mixing Screw**
   This Screw rotates to transport toner and starter onto the 1st Developer Mixing Screw.
2. **1st Developer Mixing Screw**
   This screw rotates to supply toner and starter transported from the 2nd Developer Mixing Screw onto the Sleeve/Magnet Roller.
3. **Doctor Blade**
   This Blade regulates the height of the developer brush on the surface of the Sleeve Roller.
4. **Sleeve/Magnet Roller**
   The outer Sleeve Roller rotates, while the inner Magnet Roller remains stationary. As the Sleeve Roller rotates, it conveys the developer to the point of development where the toner is attracted onto the electrostatic latent image.
5. **Toner Scattering Prevention Mylar**
   This Mylar strip is in light contact with the surface of the PC Drum, thus effectively stopping any airborne toner and carrier from floating up into the copier.
6. **Toner Recycling Coil**
   This Coil rotates to carry the toner which has been scraped off the surface of the PC Drum by the Cleaning Blade to the 2nd Developer Mixing Screw.
7. **ATDC Sensor**
   This Sensor detects the toner-to-carrier ratio of the developer.

5-3-2. Developer/Toner Flow

- As the Developing Unit is energized, developer and toner flow through the Developer Chamber as follows.

↓

The starter and toner are fed through the Toner Supply Port from the Starter Cartridge and Toner Cartridge, respectively.

↓

The replenished toner merges with the developer and they are mixed and agitated as they are fed from the left to right end. The ATDC Sensor located under the 2nd Developer Mixing Screw near the left end of the Unit detects the ratio of toner and carrier composing the developer. The Partition between the 2nd and 1st Developer Mixing Screws prevents the developer being conveyed by the 2nd Developer Mixing Screw from entering the 1st Developer Mixing Screw before it has been conveyed all the way to the right end of the Unit.

↓

As the 1st Developer Mixing Screw rotates, the developer is, while being agitated, conveyed from the right end to the left. During that time, developer which is adhering to the Sleeve/Magnet Roller is carried to the point of development by the rotating Sleeve Roller.

↓

After development, residual toner on the surface of the PC Drum is scraped off by the Cleaning Blade and conveyed by the Spent Toner Conveying Coil onto the Toner Recycling Coil.

↓

At the left of the Unit, the toner is conveyed by the Toner Recycling Coil again onto the 2nd Developer Mixing Screw.

