5-3-3. Sleeve/Magnet Roller

- The Magnet Roller is made up of five magnets asymmetrically packed as shown in the illustration on the next page.
- The Sleeve Roller, onto which developer is attracted by the magnetic fields of force set up by the poles of the Magnet Roller, rotates clockwise to convey the developer toward the point of development.
- The amount of developer being conveyed toward the point of development is strictly regulated by the height of the gap between the Doctor Blade and the surface of the Sleeve Roller. Developer which has passed through the gap is conveyed to the point of development. After development, the carrier and remaining toner are conveyed back into the Developer Chamber.

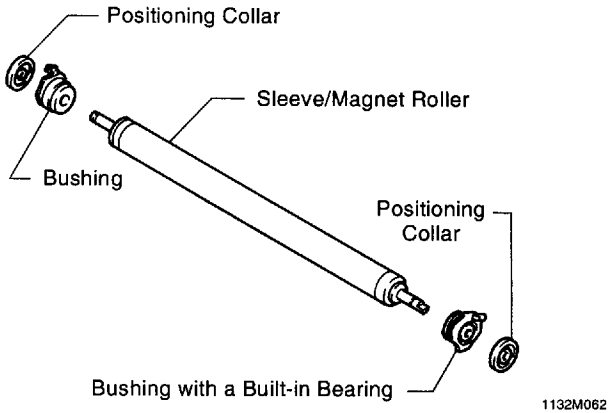

◆ **Developing Bias**

- A bias voltage of about -170V is applied to the Sleeve Roller to prevent toner from being attracted onto the non-image areas on the surface of the PC Drum. Bias voltage is ON, if Power Switch is ON.

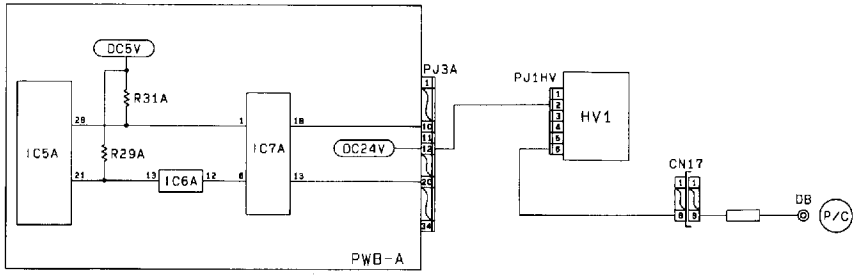

5-3-4. Function of Each Magnet

N3B : This pole causes the developer brush on the surface of the Sleeve Roller to stand up straight so that it's height will be regulated evenly by the Doctor Blade.

S2A, S2B : These two poles cause the developer bristles on the surface of the Sleeve Roller to stand up straight so that their height will be regulated evenly by the Doctor Blade.

N1 : This is the principal pole and its lines of magnetic flux at the point of development are perpendicular to the surface of the PC Drum. Therefore, when toner is attracted to the latent image, the carrier is firmly held onto the Sleeve Roller.

S1 : The height between the N1 and S1 poles is held low to ensure that the developer is easily recycled.

N2 : The developer is prevented from moving out toward the photoconductor by this pole and falls off the Sleeve Roller to be recycled toward the Screws.

N-N : As the developer approaches the N-N pole, it falls into the 1st Developer Mixing Screw for recycling.

N3A : The agitated developer is attracted onto the surface of the Sleeve Roller to form a developer brush.

