5-3-5. Toner Replenishing Mechanism

- Toner is supplied from the Toner Cartridge installed in the Toner Cartridge Holder.
- When the CPU determines that the toner to carrier ratio as detected for each copy by the ATDC Sensor has fallen below a predetermined level, Toner Replenishing Solenoid SL1 is energized.
- When Toner Replenishing Solenoid SL1 is energized, the Pawl of the Solenoid is disengaged from the Ratchet Wheel. This results in drive being transmitted to the Ratchet Wheel. This results in drive being transmitted to the Holder and the Toner Cartridge coupled to the Holder rotates one complete turn together with the Holder. As a result, toner is supplied through the Toner Supply Port and conveyed by the 2nd Developer Mixing Screw to the Developer Chamber.

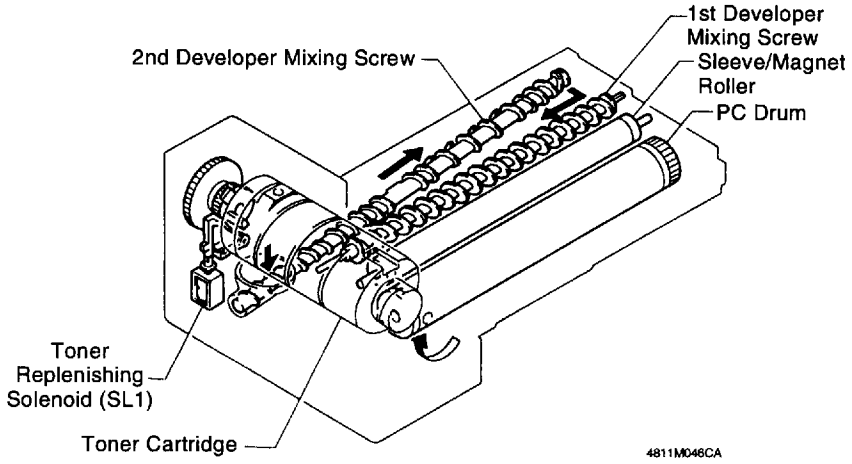

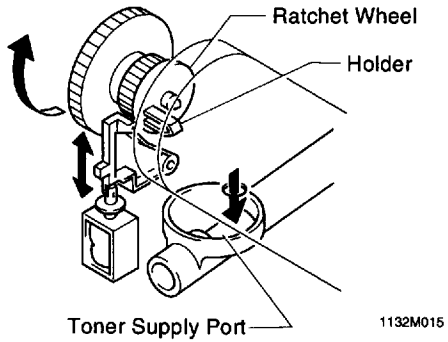

5-3-6. Toner Replenishing Control

- When the CPU determines that the toner to carrier ratio is below the predetermined level as a result of ATDC detection, the output of PJ3A-18 on PWB-A switches Low upon termination of the ATDC detection. This energizes the Toner Replenishing Solenoid (SL1) to replenish toner once.
- If the CPU determines that the toner to carrier ratio is below the predetermined level five or more consecutive times (copies), toner is replenished three times when the next copy is made.
- The amount of toner replenished in each toner replenishing sequence is 30mg or more.

