5-3-7. ATDC Detection

- The ratio of toner to carrier in the developer is detected by a magnetic flux sensor. The output of this sensor is used to control toner replenishment so that a stabilized toner to carrier ratio is maintained. This means that copies having a stabilized image density will be produced.
- The ATDC Sensor is located on the bottom side of the Developing Unit directly under the 2nd Developer Mixing Screw. The developer being conveyed by the 2nd Developer Mixing Screw passes over the top of the Sensor. As the toner in the developer is consumed during development, the amount of carrier increases. This change in the toner to carrier ratio results in a change in the magnetic flux. This in turn is converted to a corresponding voltage VC to be applied to the ATDC-Sensor and the value stored in the EEPROM.
- The reference voltage of the ATDC Sensor is set so that the toner to carrier ratio is maintained at 5.0%. By comparing the applied voltage with this reference value, the EEPROM determines the current toner to carrier ratio of the developer.

For more information, see the Function/Adjustment Mode Section.

O Carrier
• Toner

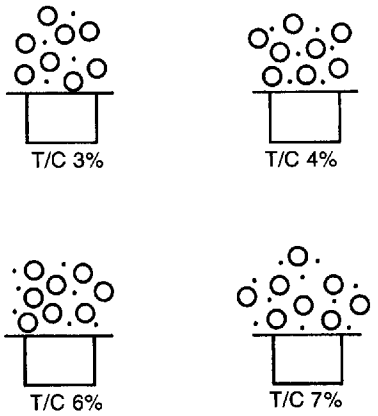

1132M063

5-3-8. ATDC Detection Control

- ATDC detection is started as soon as the Exposure Lamp (LA1) turns off after the scan is over, and is performed 16 times during 640 msec. at intervals of 20 msec.. If the ratio of toner to carrier is determined to be less than the set value eight or more times, the Toner Replenishing Solenoid (SL1) is energized to replenish toner.

Time Chart

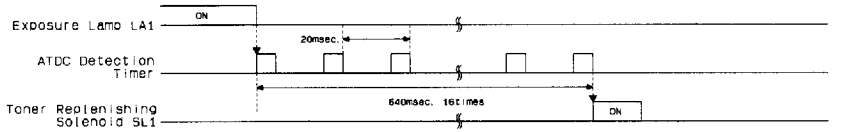

4811T11M

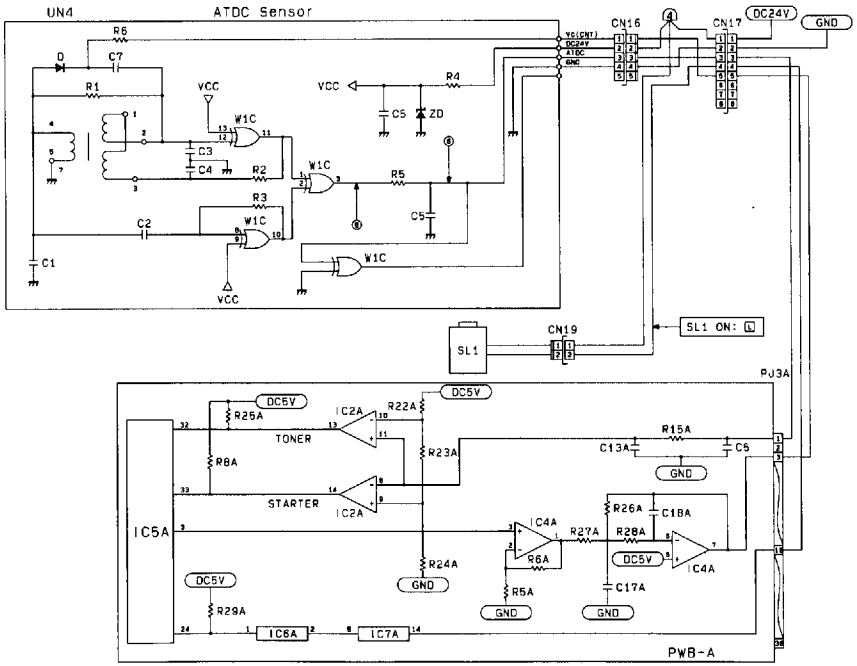

4811C09M