5-3-9. ATDC Automatic Adjustment

- Since this copier is shipped from the factory without the IM being charged with the starter, the reference voltage of the ATDC Sensor must be adjusted when setting up the machine at the user. After this copier is switched on by the user and has then warmed up, the Micro Controler enters the ATDC automatic adjustment mode to adjust the control voltage VC of the ATDC Sensor after pressing the Copy Key.
- When the IM has been changed, therefore, the EEPROM must also be changed.

Automatic Adjustment Operation and Control Sequence

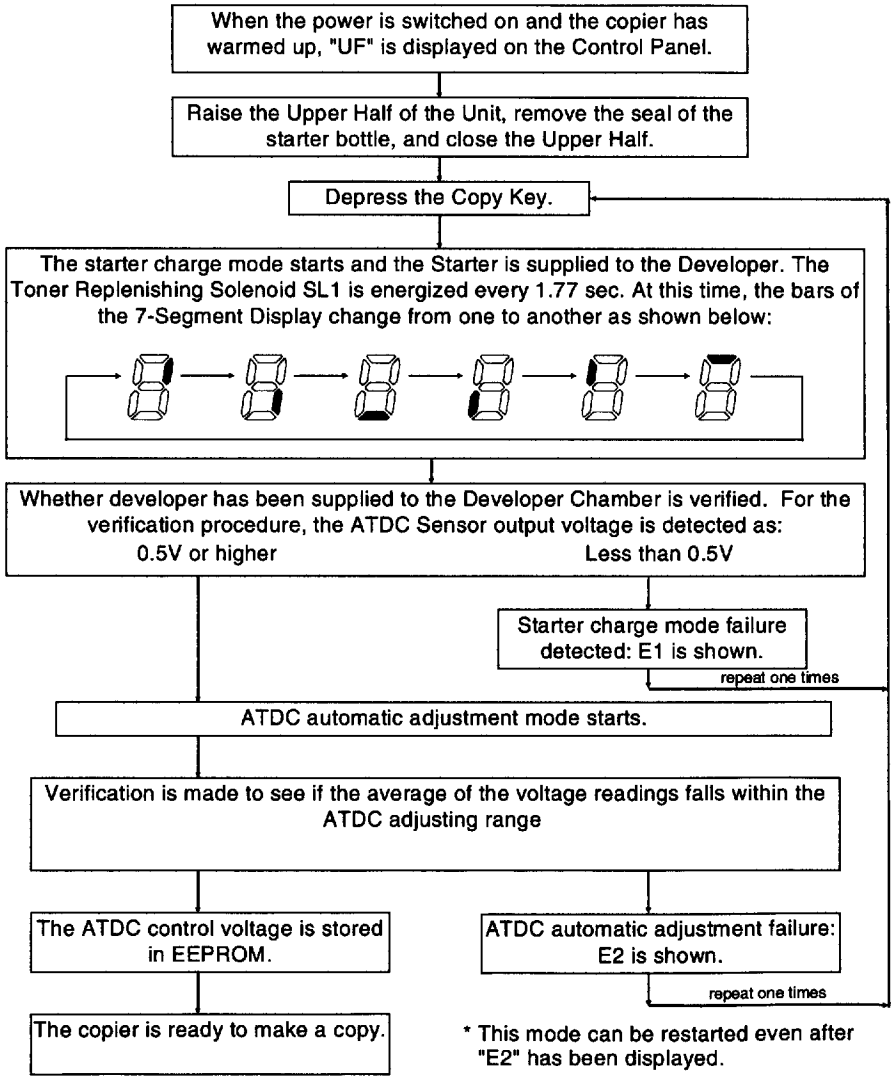

5-3-10. ATDC Automatic Adjustment Control

- In the ATDC automatic adjustment mode, the ATDC Sensor will be adjusted to the 8% starter. After calculation the 5% toner to carrier ratio value will be stored in the EEPROM. This alignment is running automatically and adjusts the complete system (ATDC- Sensor and Logic Board).

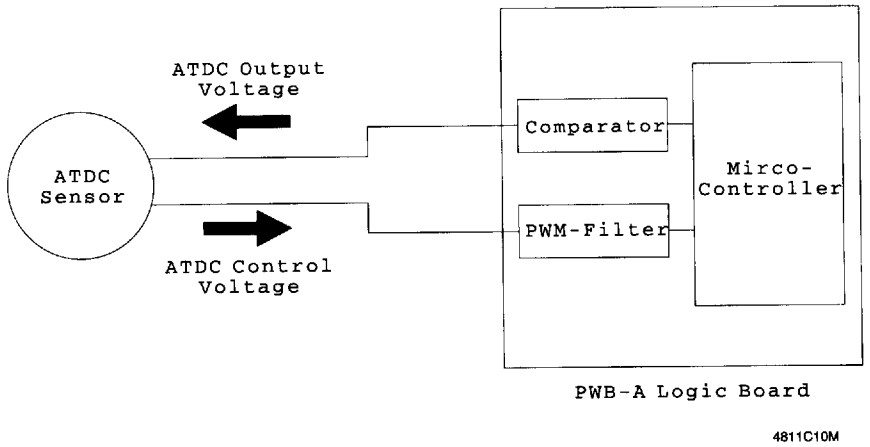

5-3-11. Toner Empty Detecting Mechanism

- Since the design feature of this copier dictates that the Developing Unit must be built compactly, the conventional toner empty detecting mechanism using a reed switch and lever cannot be employed. The ATDC Sensor is therefore used to detect the toner- empty condition.
- The ATDC Sensor detects the toner to carrier ratio of the developer each time a copy is made. There is an ATDC Counter used that counts 14 consecutive copies made with a toner to carrier ratio less than the level set in the Adjustment mode.