5-6. CLEANING UNIT

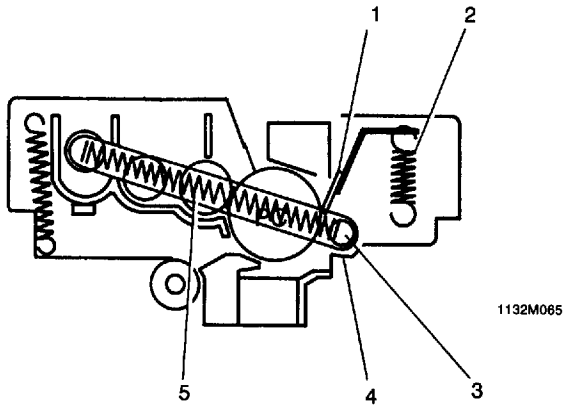

5-6-1. Construction of the Cleaning Unit

1. **Cleaning Blade**
   Scrapes any residual toner off the surface of the PC Drum.
2. **Cleaning Blade Tension Spring**
   Presses the Cleaning Blade tightly against the surface of the PC Drum.
3. **Spent Toner Conveying Coil**
   Rotates to convey the toner scraped off the surface of the PC Drum by the Cleaning Blade to the Toner Recycling Coil.
4. **Toner Anti-Spill Mylar**
   Prevents the toner scraped off the surface of the PC Drum by the Cleaning Blade from falling down onto the surface of the copy paper or the Paper Transport Guide Plate.
5. **Toner Recycling Coil**
   Recycles the toner scraped off the surface of the PC Drum to the Developing Unit.

5-6-2. Cleaning Blade Pressure Mechanism

- The Cleaning Blade is installed in the Cleaning Unit at an angle shown in the illustration and is pressed against the surface of the PC Drum in opposition to the direction of rotation of the PC Drum.

Where the Cleaning Blade is Pressed Tightly up Against the Surface of the PC Drum:

