5-6-3. Toner Recycling Mechanism

- This copier is not equipped with a Spent Toner Collecting Bottle. Rather, it employs a toner recycling mechanism which recycles the toner scraped off the surface of the PC Drum by the Cleaning Blade back to the Developer Chamber.

Residual toner is scraped off the surface of the PC Drum by the Cleaning Blade.

↓

The toner is conveyed by the Spent Toner Conveying Coil to the Toner Recycling Coil.

↓

The spent toner fed to the Toner Recycling Coil is again conveyed onto the 2nd Developer Mixing Screw.

↓

The spent toner in the Developer Chamber, being mixed with fresh toner replenished from the Toner Cartridge, is conveyed onto the 1st Developer Mixing Screw and then onto the surface of the PC Drum by the Sleeve/Magnet Roller.

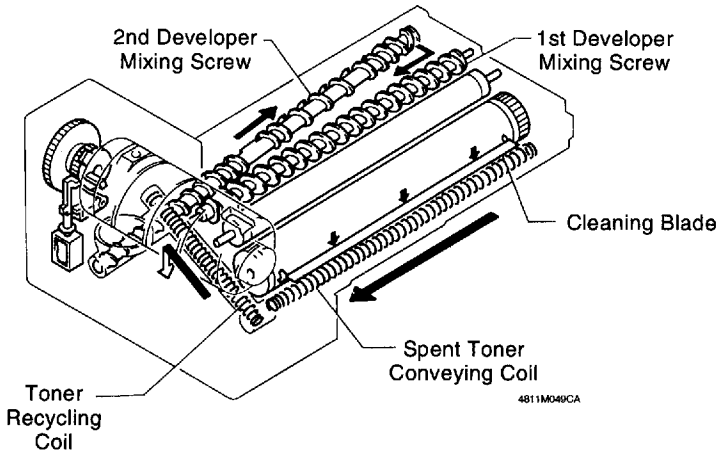

6 PAPER FEEDING SECTION

6-1. Components

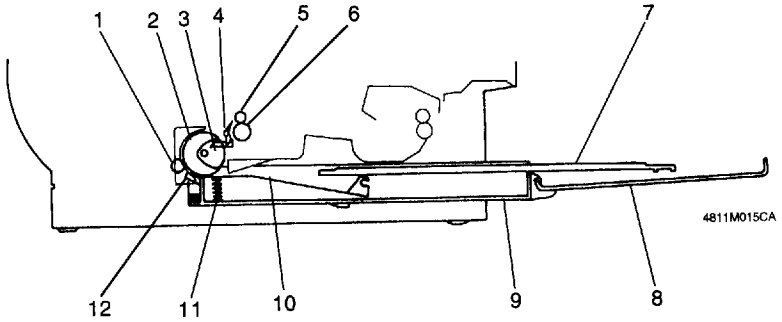

1. Paper Feed Rolls
2. Paper Feed Roller
3. Paper Take-Up Roller
4. Paper Leading Edge Sensor PC2
5. Upper Synchronizing Roller (at IM)
6. Lower Synchronizing Roller
7. Manual Sheet Feeder/Cassette Cover
8. Copy Tray
9. Paper Cassette
10. Paper Lift-Up Plate
11. Spring
12. Paper Separator Pad