6-2. Paper Cassette

- In this Cassette, approximately 100 pieces (80g/m^2) of A4L or A5C paper can be loaded. Note that when A5C paper is to be loaded, the A5C paper trailing edge stop plate must be raised.

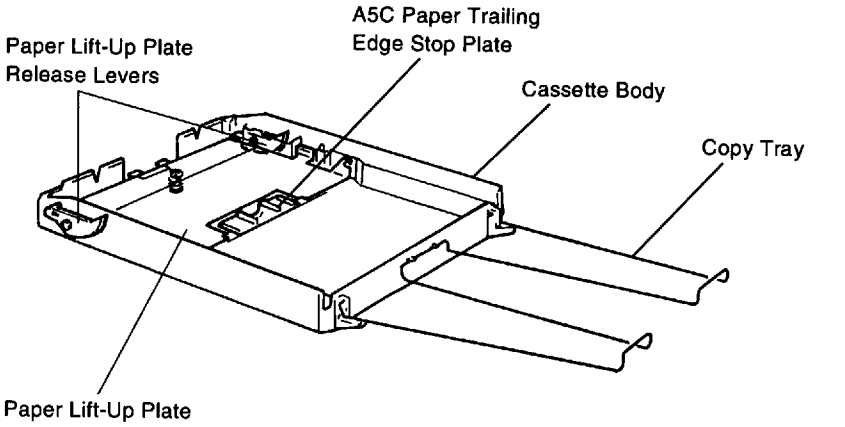

4811M016CA

6-3. Paper Life-Up Plate Release Mechanism

- When the Cassette is set into position in the copier, the projections of the copier frame push the Latches which hold the Paper Lift-Up Plate Release Levers, unlocking the Paper Lift-Up Plate Release Levers. The spring forces the Paper Lift-Up Plate up, pressing the paper stack up against the Paper Feed Rolls and making the top sheet of paper ready to be fed.
- When the Cassette is pulled out of the copier, the copier lower frame causes the Paper Lift-Up Plate Release Levers to be raised and then locked so that paper can be replenished.

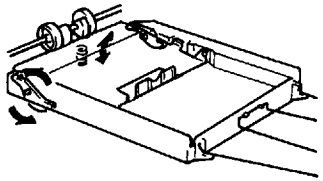

4811M017CA

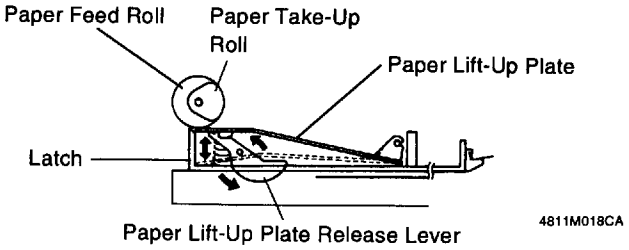

4811M018CA

6-4. Paper Take-Up/Feed Mechanism

- Paper is fed by the Paper Feed Rolls and Paper Take-Up Rolls which are driven from the Main Motor. The rotation of the Paper Feed Rolls and Paper Take-Up Rolls are started and stopped by the Paper Feed Clutch (CL1).
- When the Ratchet Wheel is secured by the Paper Feed Clutch (CL1), the Kicker Spring contained in the Ratchet Wheel prevents the drive from the Main Motor from being transmitted to the Paper Feed Rolls and Paper Take-Up Rolls to stop them.
- The Ratchet Wheel has the inner and outer ratchets which work differently from each other. For details, see the next page.

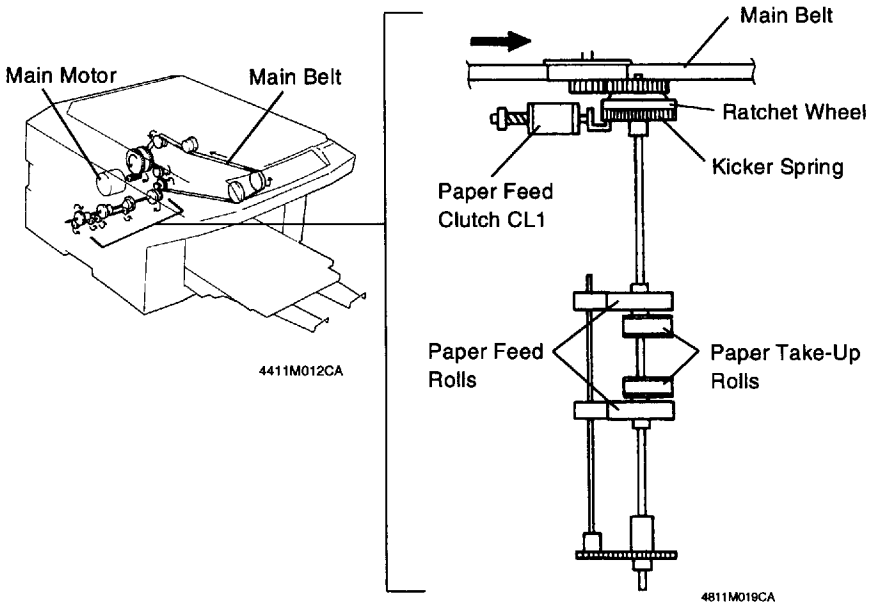

4411M012CA

4811M019CA