6-5. Paper Separation Mechanism

- To ensure that only the top sheet of paper is fed in from the Cassette, this Mechanism separates the top sheet of paper from the second one by means of the Paper Take-Up Rolls and Paper Separator Pads.
- The Paper Separator Pads are applied to the Paper Separator Base which is pressed up against the Paper Feed Rolls by the Spring. At the time of paper feeding, the Paper Take-Up Rolls rotate to produce frictional force to take up and feed only the top sheet. If several sheets of paper are going to be fed, the Paper Take-Up Rolls take up only the top one and the Paper Separator Pads prevent the other sheets from being fed.

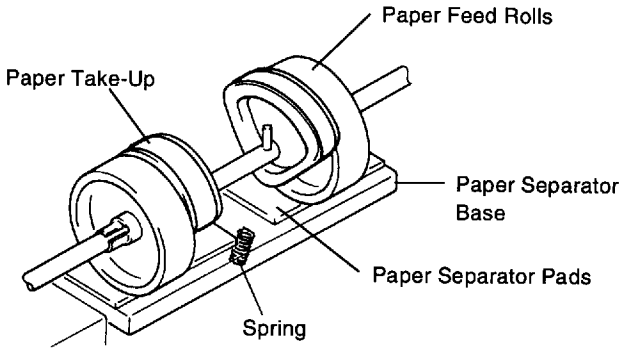

6-6. Paper Empty Detection

- This copier is not equipped with a paper empty sensor. The absence of paper is detected if no sheet of paper reaches the Paper Leading Edge Sensor PC2 from when the Paper Take-Up Rolls have started rotating until when the Scanner reaches the Scanner Synchronizing Position Sensor (PC12). "P" is displayed on the Control Panel to indicate paper empty detection.

6-7. Manual Feeding

- The Cassette has Manual Sheet Feeder grooves at the top on the left and right side, in which the Manual Sheet Feeder slides. For manual feeding, push the Manual Sheet Feeder into the grooves. The Paper Lift-Up Plate Release Levers are then pushed down to stop paper feeding from the Cassette, enabling sheets of paper to be fed manually.
- The manual paper feeding is under the same control as the cassette paper feeding.
- The Manual Sheet Feeder has the A5L and A6C Paper Trailing Edge Stop Plates. When either of these paper types is to be fed manually, raise the corresponding Stop Plate.

