7 OPTICAL SECTION

7-1. Components

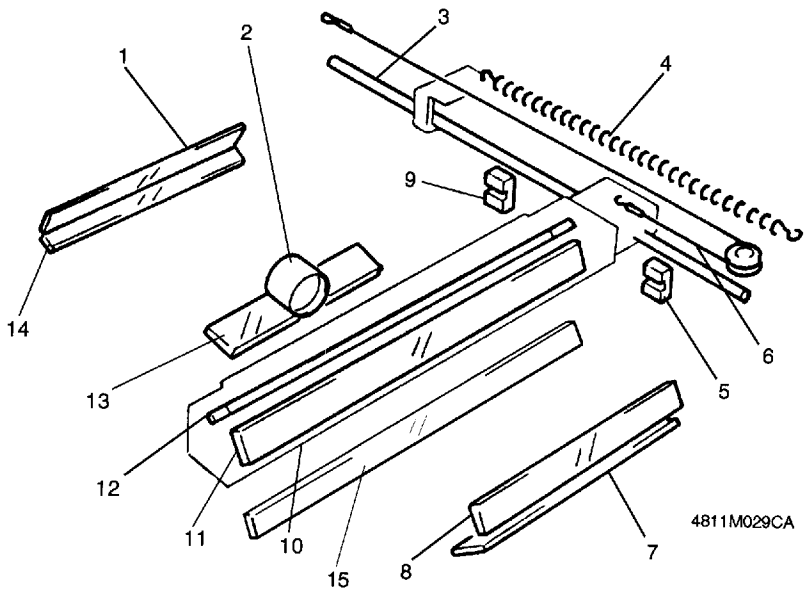

1. 4th Mirror
2. Lens
3. Carriage Shaft
4. Return Spring
5. Scanner Synchronizing Position Sensor (on PWB-A)
6. 2nd/3rd Mirrors Carriage Drive Cable
7. 3rd Mirror
8. 2nd Mirror
9. Scanner Home Position Sensor (on PWB-A)
10. Scanner
11. 1st Mirror
12. Exposure Lamp
13. Lens Holder
14. 5th Mirror
15. 6th Mirror

7-2. Scanner

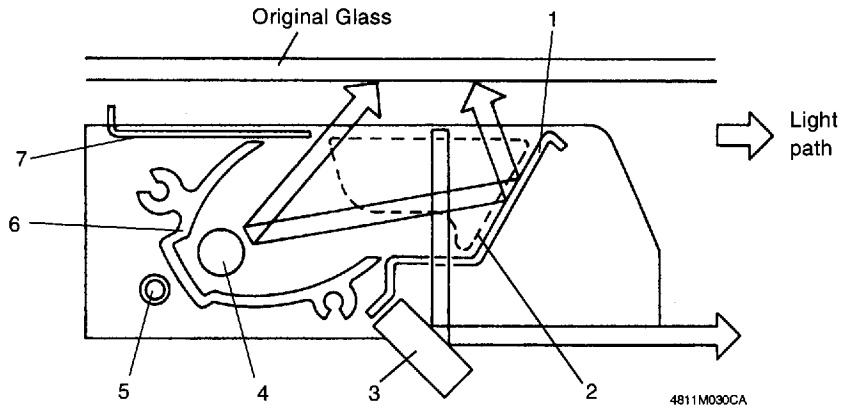

1. Auxiliary Reflector
   - To prevent the emergence of a shadow on a copy, the Auxiliary Reflector reflects the light of the Exposure Lamp onto the original which does not make complete contact with the Original Glass surface, such as a book.
2. Intensity Correction Mirror
   - The intensity of the light emitted by Exposure Lamp is slightly attenuated at the very ends, which is corrected by the Intensity Correction Mirrors fitted on the front and rear ends of the Scanner.
3. 1st Mirror
   - The 1st Mirror reflects the light from the original surface to the 2nd/3rd Mirrors.
4. Exposure Lamp
   - This copier uses a halogen frost lamp for the Exposure Lamp. The intensity of the light emitted by the Exposure Lamp varies symmetrically around the center of the Lamp, it is lower at the center and higher (about 15%) at the left and right side.
5. Exposure Lamp Thermal Fuse
   - Exposure Lamp Thermal Fuse becomes electrically open if the temperature in the area surrounding the Main Reflector exceeds 139°C thus cutting off the circuit to the Exposure Lamp.
6. Main Reflector
   - The Main Reflector ensures that light from the Exposure Lamp exposes all areas of the original
7. Aperture Plate
   - The Aperture Plate regulates the amount of the Exposure Lamp light striking the surface of the original, ensuring even light distribution.