7-3. Scanner Drive Mechanism

- The Scanner is held by the Carriage Shaft on one end and is driven by the Scanner Drive Plate and Optical Drive Chain.
- The drive from the Main Motor is transmitted to the Optical Drive Chain via the gears, pulleys and belts. Without any clutches and the like in these transmission paths, the Scanner is designed to move horizontally as the Main Motor rotates. If the scanner is accidentally blocked, the torque limiter will be actuated to avoid damages of the scanner.(For the transmission of drive from the Main Motor, see Section 3. DRIVE SYSTEM.)
- The Scanner Drive Plate is slotted to engage with the Drive Pin on the Optical Drive Chain. As the Chain rotates, the Scanner moves horizontally along the Carriage Shaft to carry out a scan motion (return motion).
- The Scanner Drive Plate has the Light Blocking Plate for the Scanner Home Position Sensor and Scanner Synchronizing Position Sensor which are used to detect the position of the Scanner.

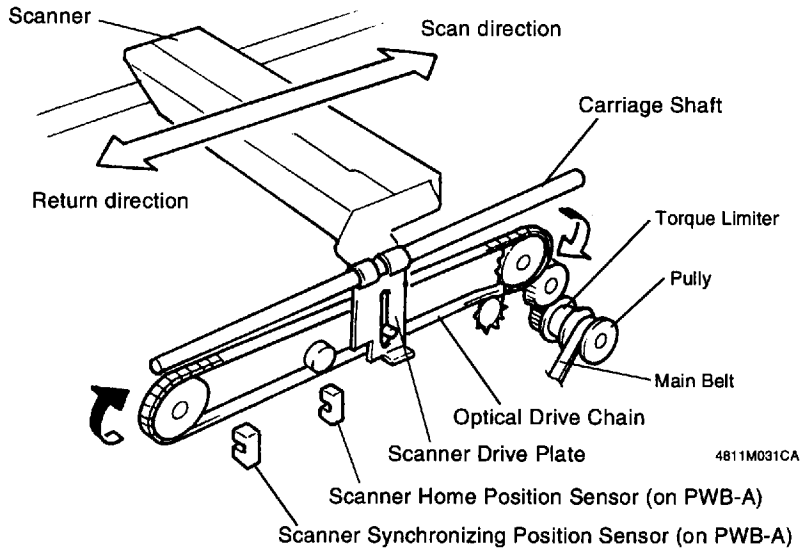

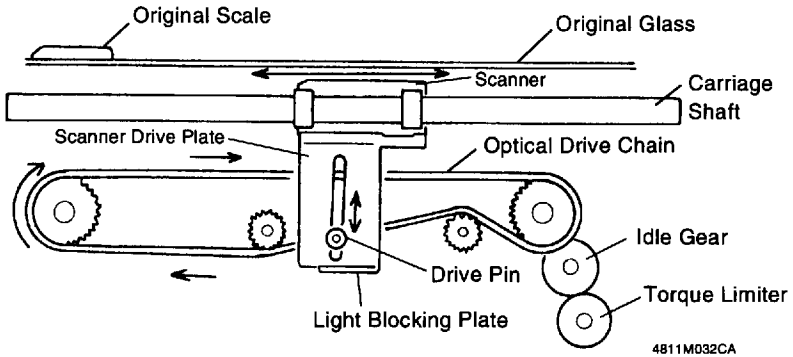

7-4. Sensors in the Optical Section

- The Optical Section has the Scanner Home Position Sensor and Scanner Synchronizing Position Sensor. These Optical Sensors are mounted on PWB-A and their lights are blocked by the Light Blocking Plate of the Scanner.
- Paper feeding start, Synchronizing Roller rotation start and other timings depend largely on the position of the Scanner which is designed to move horizontally as the Main Motor rotates, as described in the preceding section. Hence, the Optical Sensors are used to detect the position of the Scanner, thereby detecting reference signals for overall control of the copier.

● Scanner Home Position Sensor (PC11)

- Detects the home position of the Scanner.
- Also detects the reference signals for the following operations:
  - Paper Synchronizing Clutch energization (for sheets of paper from the second one on in a multi-copy process)
  - Main Motor ON
  - Grid voltage output OFF
  - Toner replenishing operation (for replenishing operation of three replenishing cycles and one copy cycle)

● Scanner Synchronizing Position Sensor (PC12)

- Detects the scan position to provide the reference timing for the scan motion.
- Also detects the reference signals for the following operations:
  - Exposure Lamp ON
  - High Voltage Unit energization
  - Grid voltage output ON
  - Paper Synchronizing Clutch de-energization (Synchronizing Roller rotation start)
  - Toner replenishing operation (for replenishing operation of three replenishing cycles and one copy cycle)

