7-5. 2nd/3rd Mirrors Carriage

- The 2nd and 3rd Mirrors are mounted at 90° to each other and therefore the angle of reflection of the light beam between the two Mirrors is 180°.
- The 2nd/3rd Mirrors Carriage moves during the scan motion at a speed half of the Scanner's, thereby keeping constant the conjugation distance between the Original Glass and the surface of PC Drum.
- The 2nd/3rd Mirrors Carriage is held by the Carriage Shaft on one end and is driven by the 2nd/3rd Mirrors Carriage Drive Cable and Return Spring.
- When the Scanner moves in the scan direction, the 2nd/3rd Mirrors Carriage Drive Cable is drawn by the Scanner and the 2nd/3rd Mirrors Carriage moves in the scan direction at a speed half of the Scanner's.
- When the Scanner moves in the return direction, the 2nd/3rd Mirrors Carriage Drive Cable slackens and the 2nd/3rd Mirrors Carriage moves in the return direction by the force of the Return Spring.

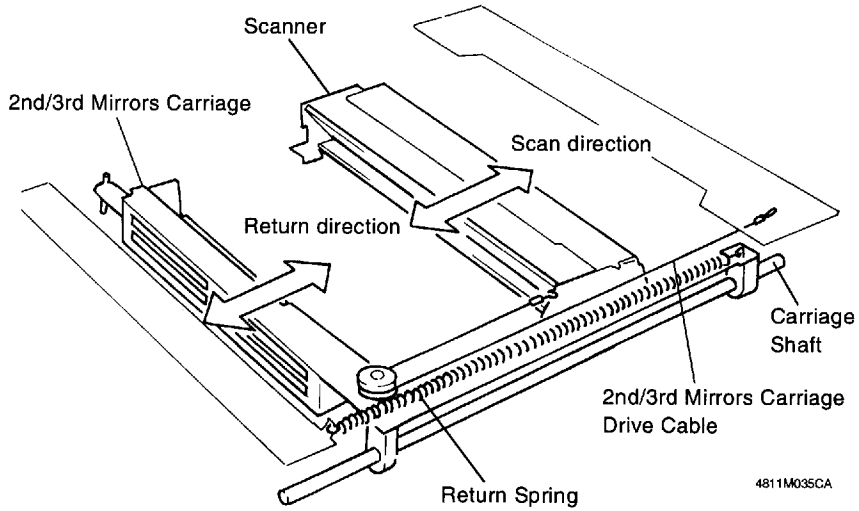

7-6. 4th/5th/6th Mirrors

- The 4th and 5th Mirrors are mounted at right angles to each other. After the reflected light has passed through the Lens, it strikes the 4th and 5th Mirrors and is reflected onto the 6th Mirror.
- The 6th Mirror reflects the light from the 5th Mirror onto the PC Drum at the reflection angle of 115 degrees.

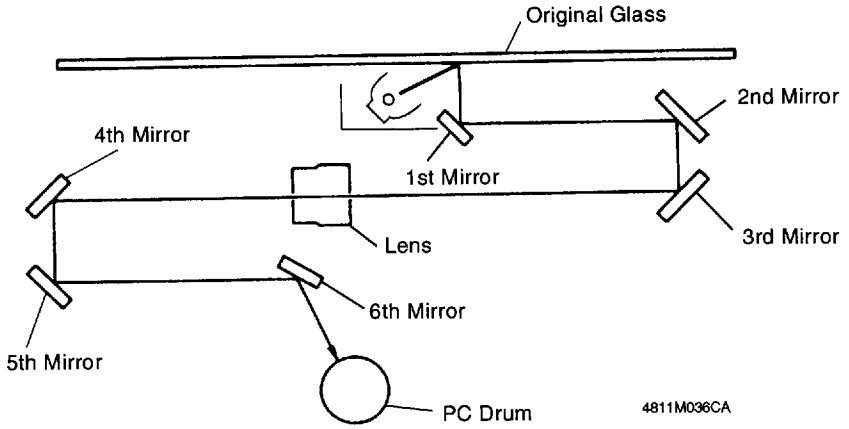

7-7. Exposure Lamp

- This copier uses a halogen frost lamp for the Exposure Lamp. The intensity of the light emitted by the Exposure Lamp varies symmetrically around the center of the Lamp.
- Provided at the back side of the Lamp Main Reflector is a Thermal Fuse that prevents the temperature surrounding the Lamp Main Reflector from going excessively high (141°C, 10A).

