PARTS CATALOG

FOR

Model LFO

[Europe/France/Asia]

2	July 18,1997	Second Edition
1	July 10,1997	First Edition

Model LFO (H523)
[Europe/France/Asia]

PARTS CATALOG

INTRODUCTION

This chapter instructs you the numbers and names of parts on this machine.

INDEX to PARTS CATALOG

1.EXTERIOR - 1 2
2.EXTERIOR - 2 4
3.CASSETTE 6
4.ADF UNIT 1 8
5.ADF UNIT 2 10
6.SCANNER - 1 12
7.SCANNER - 2 14
8.LASERUNIT 16
9.PAPER FEED SECTION 18
10.DEVELOPMENT UNIT 20
11.FUSING UNIT 22
12.PAPER EXIT SECTION 1 24
13.FRAME AND ELECTRICAL SECTION 1 26
14.FRAME AND ELECTRICAL SECTION 2 28
15.OPTION CASSETTE 30
PARTS INDEX 33

1.EXTERIOR -1

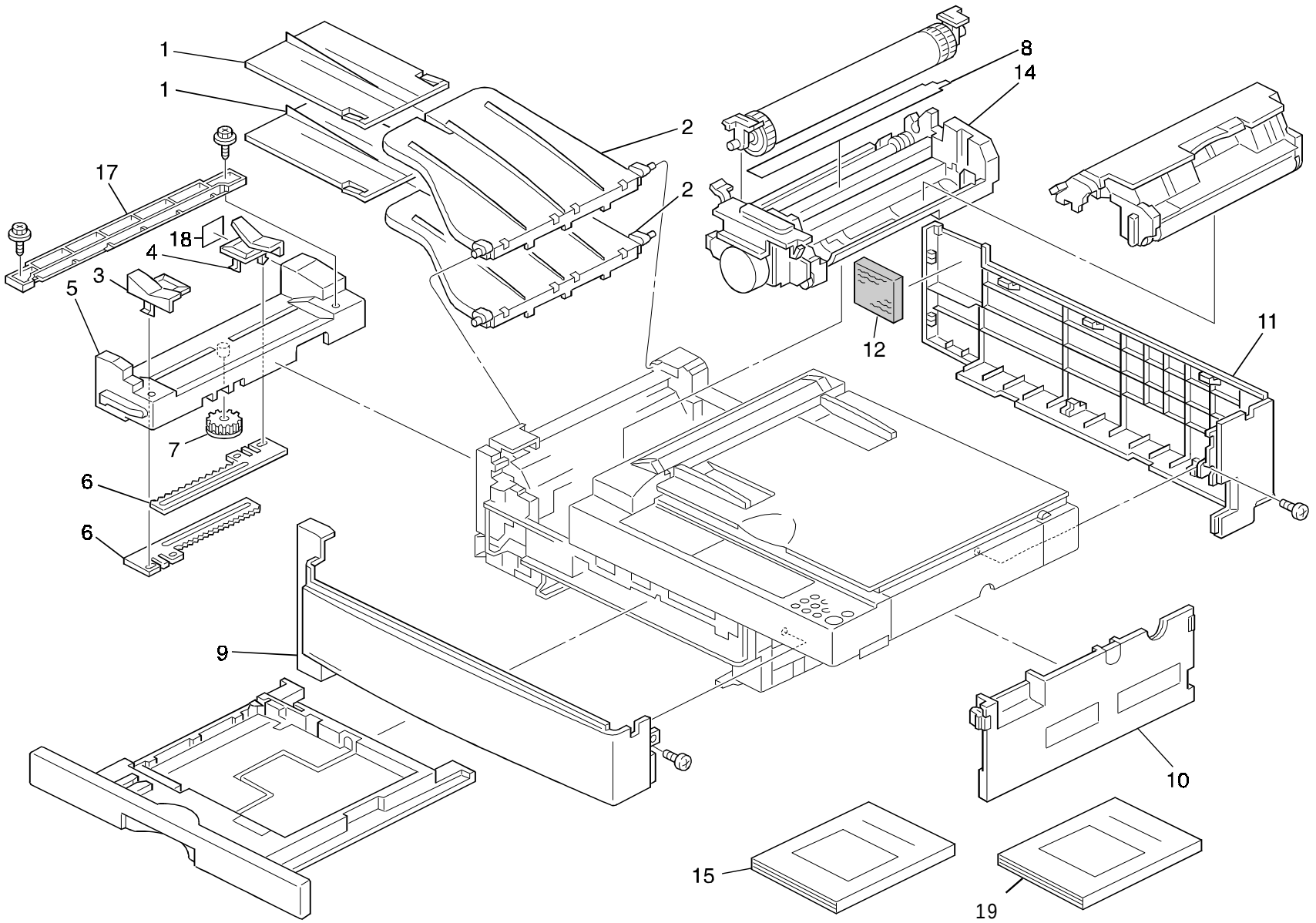

1.EXTERIOR - 1

Index No	Parts No.	Description	Q'ty Per Aseembly
1	H521 4033	Copy Tray Extension	2
2	H523 4751	Copy Tray	2
3	H523 3332	Manual Feed Guide - Front	1
4	H523 3333	Manual Feed Guide - Rear	1
5	H523 3331	Manual Feed Table	1
6	A053 2816	Side Fence Gear	2
7	AB01 3492	Gear - 16Z	1
8	H516 2528	Sheield - Rubber Roller - A4	1
9	H523 4023	Front Cover	1
10	H523 4025	Right Cover	1
11	H523 4024	Rear Cover	1
12	H523 3195	Ozone Filter	1
14	H523 9570	Develpment Unit - Ass'y - LFO	1
15	H523 8609	Operation Manual - Fax (Ricoh - Asia)	1
15	H523 8629	Operation Manual - Fax (NRG - Asia)	1
17	H523 3351	Manual Feed Table	1
18	H523 3348	Decal - Manual Feed (EU/France)	1
18	H523 3349	Decal - Manual Feed (Asia)	1
19	H523 8659	Operation Manual - PC (Ricoh/NRG - Asia)	1

Index	Parts No.	Description	Q'ty Per Aseembly

2.EXTERIOR - 2

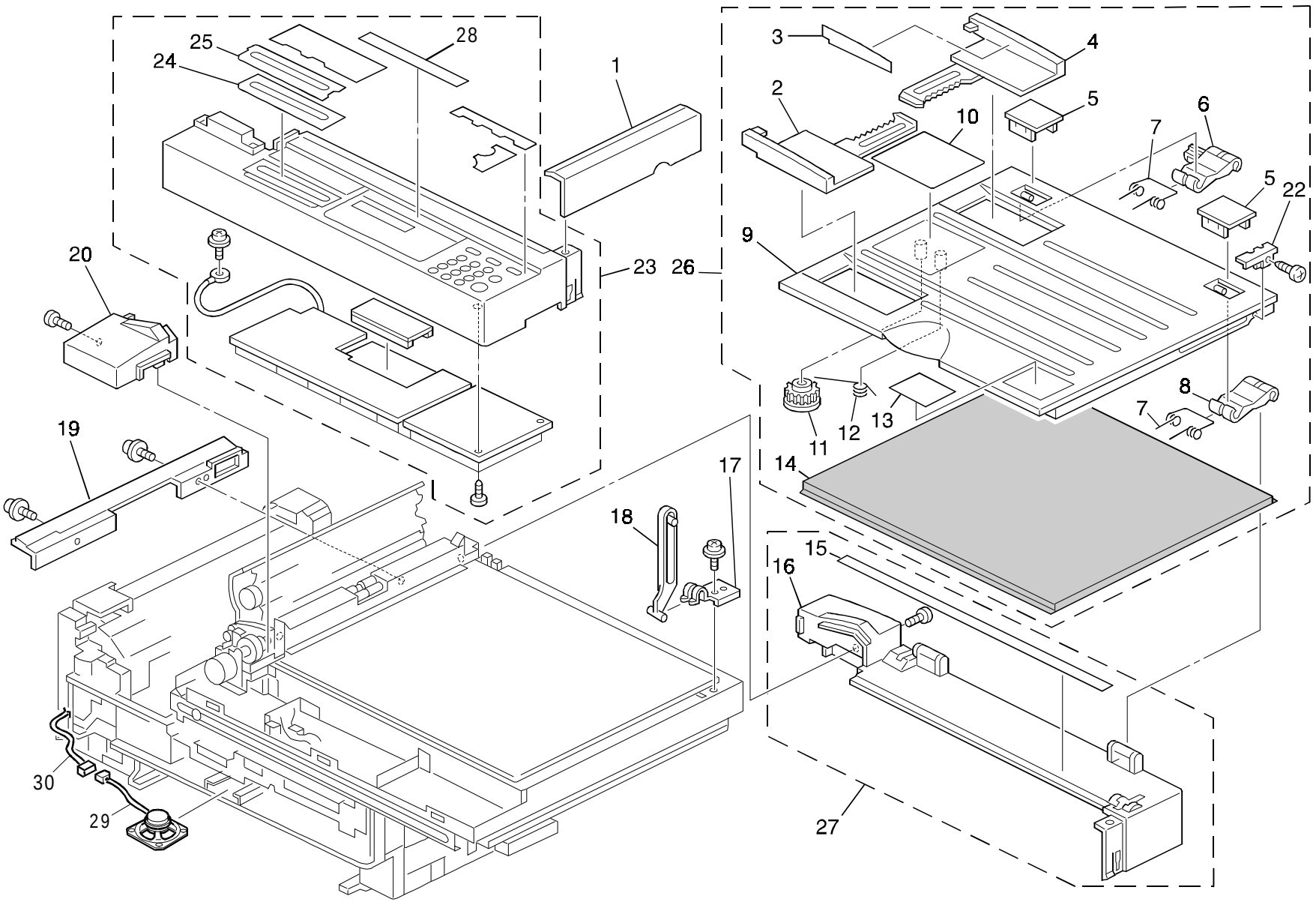

2.EXTERIOR - 2

Index No	Parts No.	Description	Q'ty Per Aseembly
1	H523 4021	Right Upper Cover	1
2	H523 4030	Front Original Guide	1
3	H523 4045	Decal - Original Guide	1
4	H523 4031	Rear Original Guide	1
5	H523 4040	Platen Hinge Cover	2
6	H523 4035	Hinge - Platen Cover	1
7	H523 4041	Spring - Platen Cover Hinge	2
8	H523 4027	Hinge - Platen Cover	1
9	H523 4026	Platen Cover	1
10	H523 4049	Decal - Platen Cover (EU/France)	1
10	H523 4050	Decal - Platen Cover (Asia)	1
11	H523 4032	Gear - Original Guide	1
12	H523 4033	Spring - Original Guide	1
13	H523 4048	Decal - Scanner Release	1
14	H523 4036	Platen Cover Sheet	1
15	H523 4043	Decal - Scale	1
16	H523 4020	Upper Rear Cover	1
17	H523 4042	Bracket - Platen Cover Stopper	1
18	H523 4034	Stopper - Platen Cover	1
19	H523 1260	Fusing Cover	1
20	H523 4022	TX Motor Cover	1
22	H523 4038	Platen Cover Bracket	1
23	H523 4512	Operation Panel Ass'y (RIC-Asia)	1
23	H523 4543	Operation Panel Ass'y (NRG-Asia)	1
23	H523 4531	Operation Panel Ass'y (RIC/NRG/Infotec)	1
24	H523 4556	Quick Dial Sheet	1
25	H523 4557	Quick Dial Sheet Cover	1
26	H523 4064	Platen Cover Ass'y	1
26	H523 4065	Platen Cover Ass'y (Asia)	1
27	H523 4066	Upper Rear Cover Ass'y	1
28	H523 4213	Operation Panel Sheet - Gestetner (Asia)	1
28	H523 4214	Operation Panel Sheet - Nashua (Asia)	1
28	H523 4553	Operation Panel Sheet - Ricoh	1
29	H515 5049	Speaker (Asia)	1
30	H523 5311	Speaker Harness (Asia)	1

Index	Parts No.	Description	Q'ty Per Aseembly

3.CASSETTE

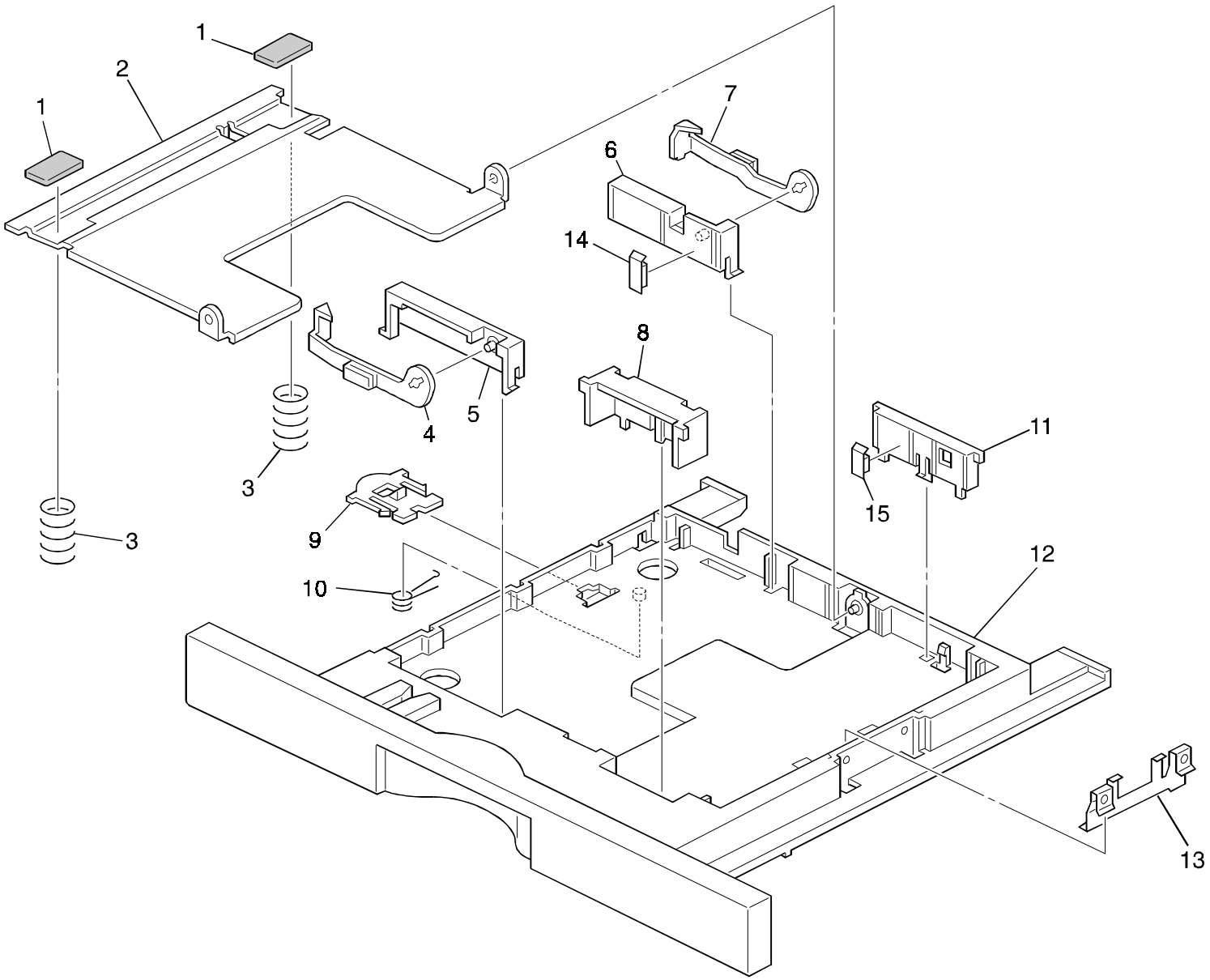

3.CASSETTE

Index No	Parts No.	Description	Q'ty Per Aseembly
1	H521 3419	Bottom Plate Pad	2
2	H523 3302	Bottom Plate	1
3	H523 3304	Spring - Bottom Plate	2
4	H523 3312	Front Corner Separator	1
5	H523 3338	Front - Side Fence	1
6	H523 3339	Rear - Side Fence	1
7	H523 3303	Corner Separator - Rear	1
8	H523 3341	Cassette End Fence	1
9	H516 3425	Lock - Bottom Plate	1
10	H516 3426	Spring - Lock - Bottom Plate	1
11	H523 3340	Right Side Fence	1
12	H523 3301	Paper Cassette	1
13	H523 3345	Spring Plate:End Fence	1
14	H523 3353	Sponge - Left Cassette	1
15	H523 3354	Sponge - Right Cassette	1

Index	Parts No.	Description	Q'ty Per Aseembly

4.ADF UNIT 1

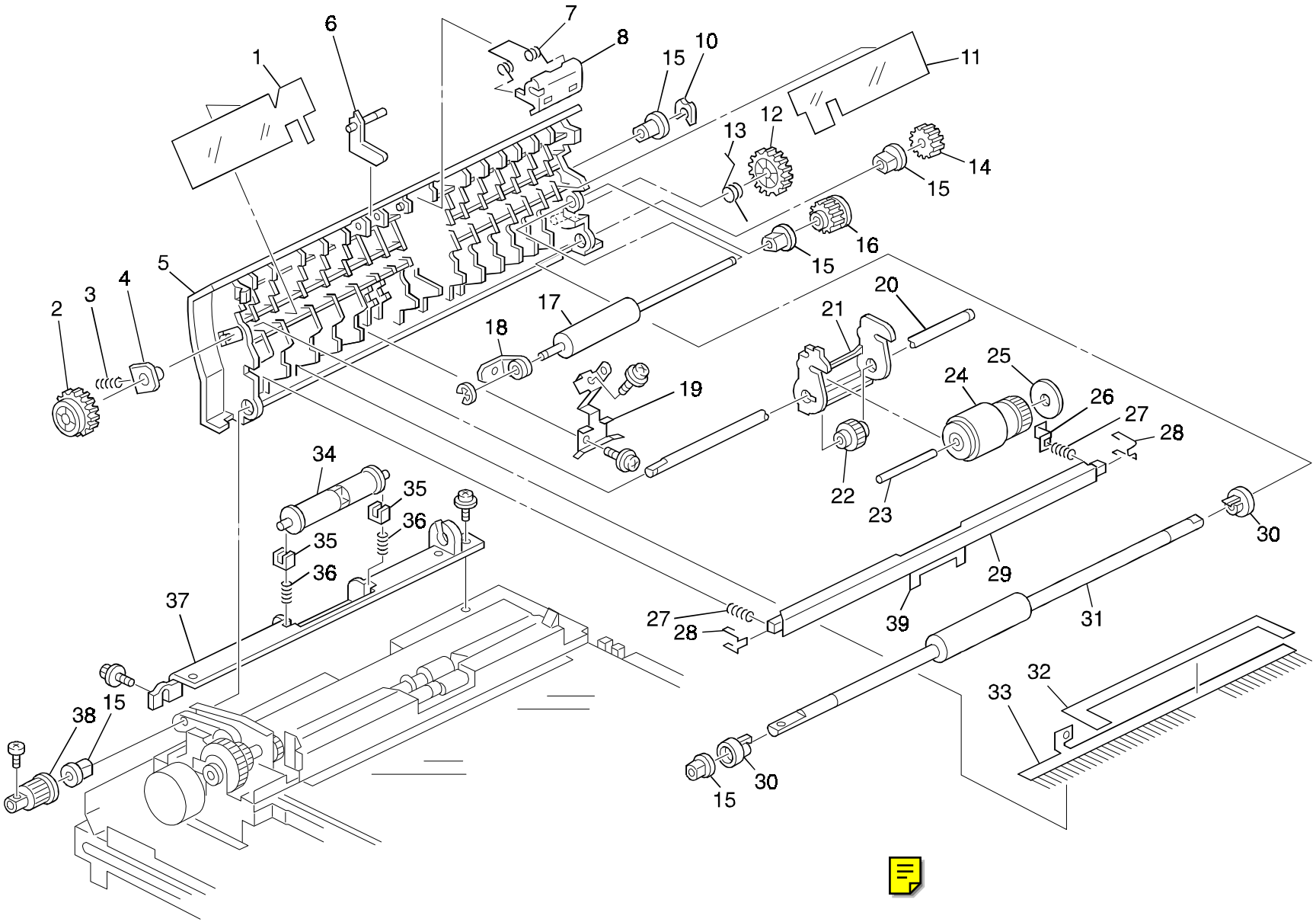
1
6
7
8
15
10
11
12
13
14
15
16
15
2
3
4
5
17
18
19
20
21
22
23
24
25
26
27
28
34
35
36
35
36
37
27
28
29
39
31
30
38
15
15
30
32
33

4.ADF UNIT 1

Index No	Parts No.	Description	Q'ty Per Aseembly
1	H523 1301	Front Cover Sheet	1
2	H523 1267	Front Drive Gear	1
3	H523 1299	Spring - Slide Bearing	1
4	H523 1285	Drive Bushing	1
5	H523 1256	Cover Guide	1
6	H523 1309	S1 Lever	1
7	H523 1293	Spring - Pressure Plate	1
8	H523 1261	Pressure Plate - Pickup	1
9	H523 1335	Rear Sheet - Pressure Plate	1
10	H515 3543	E-ring - Jre4	1
11	H523 1302	Rear Cover Sheet	1
12	H523 1271	Idler Gear - R2	1
13	H523 1300	Earth Spring	1
14	H523 1305	Gear - R2	1
15	H523 1306	Bushing - R2	5
16	H523 1270	Gear - R1	1
17	H523 1254	R1 Roller	1
18	H523 1283	Bushing - R1	1
19	H523 1334	Ground Plate - R1	1
20	H523 1276	Separathin Drive Shaft	1
21	H523 1259	Separation Roller Bracket	1
22	H523 1268	Middle Drive Gear	1
23	H523 1289	Reverse Shaft	1
24	H523 1252	Separation Roller	1
25	H523 1337	Reverse Roller Collar	1
26	H523 1325	Ground Plate - Pressure Plate	1
27	H523 1298	Spring - Pressure Plate	2
28	H523 1291	Hook - Pressure Plate	2
29	H523 1282	Sheet - Pressure Plate	1
30	H523 1318	Roller Collar - R2	2
31	H523 1255	R2 Roller	1
32	H523 1307	Front Sheet - discharge Brush	1
33	H523 1303	Discharge Brush	1
34	H523 1280	R2 Pressure Roller	1
35	H523 1284	Bushing - Pressure R2	2
36	H523 1297	Spring - Pressure R2	2
37	H523 1258	Exit Guide	1

Index	Parts No.	Description	Q'ty Per Aseembly
38	H523 1314	Pulley - R2	38

5.ADF UNIT 2

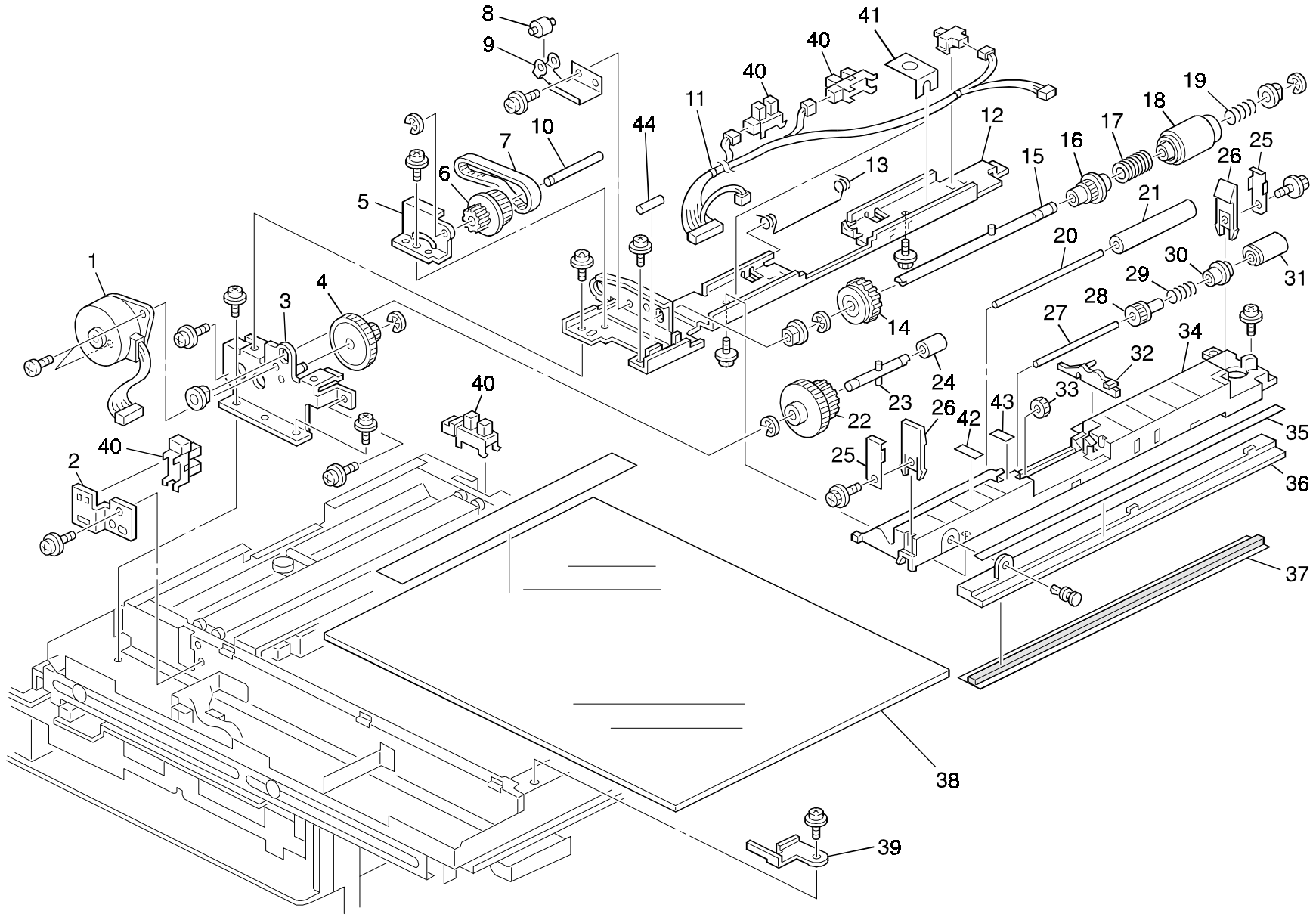
1
2
3
4
5
6
7
8
9
10
11
12
13
14
15
16
17
18
19
20
21
22
23
24
25
26
27
28
29
30
31
32
33
34
35
36
37
38
39
40
41
42
43
44

5.ADF UNIT 2

Index No	Parts No.	Description	Q'ty Per Aseembly
1	H523 5010	ADF Motor	1
2	H523 1096	Sensor Bracket	1
3	H523 1094	Motor Bracket	1
4	H523 1264	Gear - Slow Down	1
5	H523 1324	Pulley Bracket	1
6	H523 1321	Pulley - Slow Down	1
7	H523 1315	Timing Belt	1
8	H523 1328	Tightener Rollre	1
9	H523 1319	Spring Plate - Tightener	1
10	H523 1329	Pulley Shaft	1
11	H523 5321	Harness - SCN-SE	1
12	H523 1323	Sensor Bracket	1
13	H523 1292	Spring - Pressure R1	1
14	H523 1311	Feed Gear - Middle	1
15	H523 1275	Feed Roller Shaft	1
16	H523 1266	Feed Gear - Rear	1
17	H523 1322	Spring Clutch - Feed	1
18	H523 1251	Feed Roller	1
19	H523 1295	Feed Spring	1
20	H523 1290	Pressure Shaft - R1	1
21	H523 1350	Pressure Roller - R1	1
22	H523 1265	Front Feed Gear	1
23	H523 1326	Front Feed Shaft	1
24	H523 1327	Collar - Feed Shaft	1
25	H523 1333	Supporting Plate - Lock Holder	2
26	H523 1278	Lock Holder	2
27	H523 1288	Pickup Roller Shaft	1
28	H523 1273	Pickup Gear	1
29	H523 1294	Pickup Roller Spring	1
30	H523 1287	Pickup Roller Collar	1
31	H523 1250	Pickup Roller	1
32	H523 1281	S2 Lever	1
33	H523 1272	Idle Gear - Pickup	1
34	H523 1257	Lower Guide	1
35	H523 1332	Decal - Left Scale	1
36	H523 1263	Scale	1
37	H523 1274	Shading Sheet	1

Index	Parts No.	Description	Q'ty Per Aseembly
38	H523 1073	Exposure Glass	1
39	H523 1097	Exposure Glass Bracket	1
40	H523 5003	Photointerruptor	4
41	H523 1338	Harness Holder Sheet	2
42	H523 1345	ADF Mylar - 1	1
43	H523 1346	ADF Mylar - 2	1
44	H001 4221	Harness Clamper	1



6.SCANNER - 1

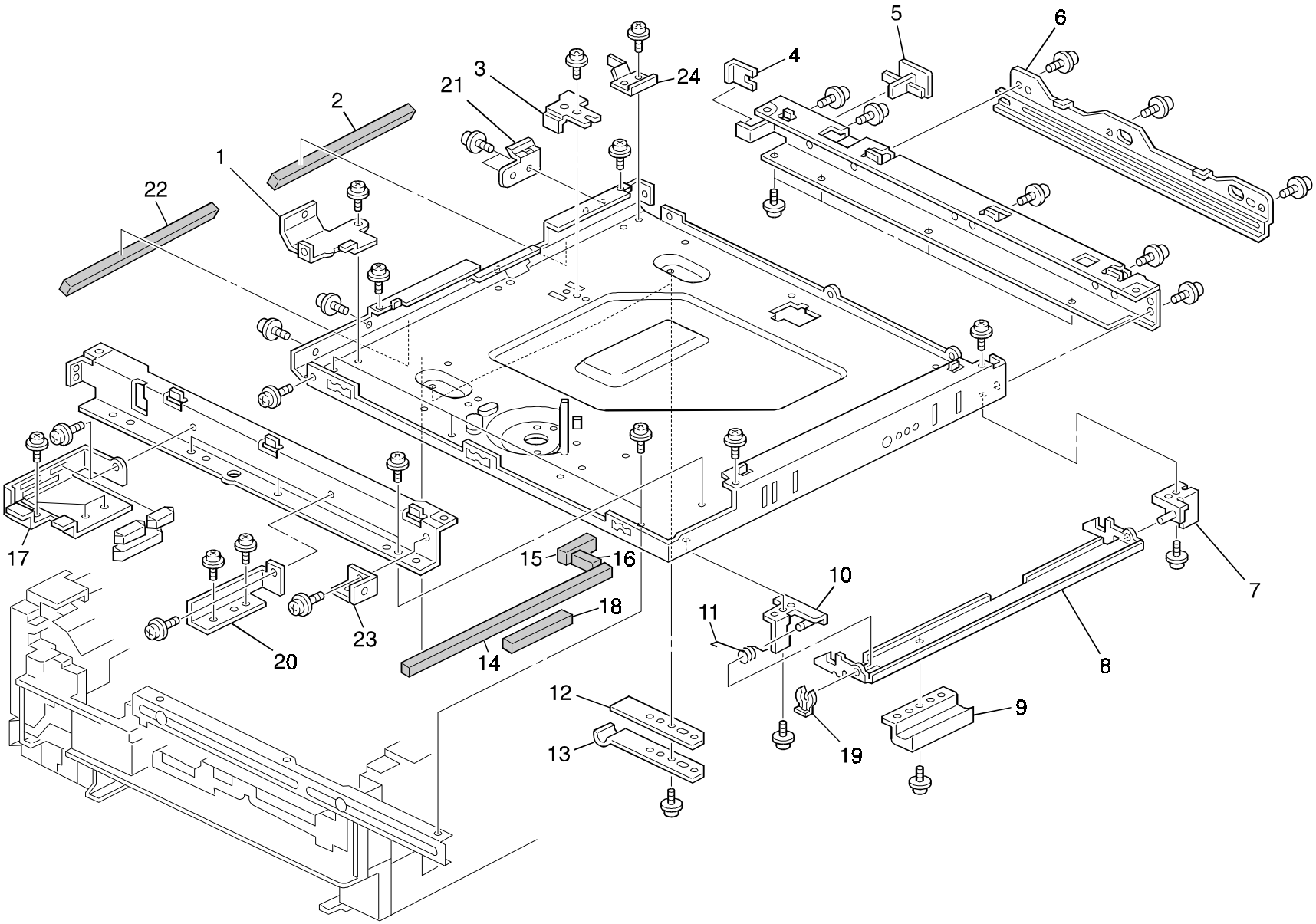

6.SCANNER - 1

Index No	Parts No.	Description	Q'ty Per Aseembly
1	H523 1062	Stay Bracket 3	1
2	H523 1089	Fusing Sponge 1	1
3	H523 1090	CMT Stopper	1
4	H523 1122	Bracket -On Off Detector	1
5	H523 1079	Carriage Stopper	1
6	H523 1101	Rear Rail	1
7	H523 1083	Rear Lock Bracket	1
8	H523 1103	Lock Lever	1
9	H523 1105	Lock Handle	1
10	H523 1080	Front Lock Bracket	1
11	H523 1104	Lock Spring	1
12	H523 1107	Pressure Spring Plate	2
13	H523 1106	CMT Spring Plate	2
14	H523 1113	CMT Sponge 1	1
15	H523 1116	CMT Sponge 4	1
16	H523 1115	CMT Sponge 3	1
17	H523 1060	Stay Bracket 1	1
18	H523 1114	CMT Sponge 2	1
19	5206 2686	Snap Ring	1
20	H523 1063	Stay Bracket 4	1
21	H523 4037	ADF Stopper	1
22	H523 1112	Fusing Sponge 2	1
23	H523 1121	Stay Bracket 5	1

Index	Parts No.	Description	Q'ty Per Aseembly

7.SCANNER - 2

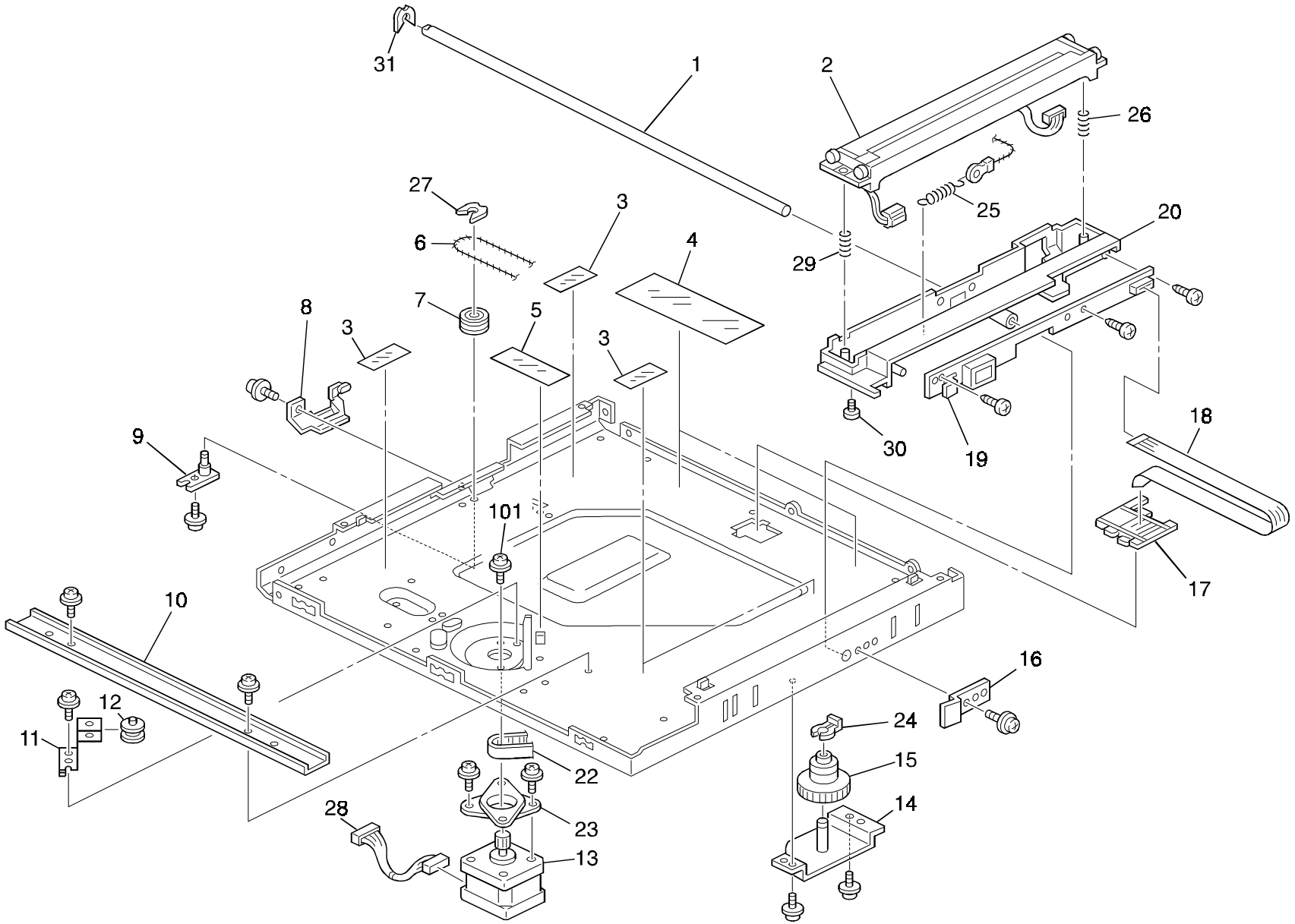

31
1
2
26
27
3
25
20
6
4
29
7
5
8
3
3
18
9
30
19
101
17
10
16
12
24
11
15
22
14
28
23
13

7.SCANNER - 2

Index No	Parts No.	Description	Q'ty Per Aseembly
1	H523 1075	Slider Shaft	1
2	H523 5000	Contact Image Sensor Ass'y	1
3	H523 1110	Base Sheet 1	4
4	H523 1088	Sheet - Flexible Board	2
5	H523 1111	Base Sheet 2	1
6	H523 1074	Scanner Wire	1
7	H523 1072	Driven Pulley	1
8	H523 1091	Shaft Cover	1
9	H523 1065	Driven Roller Bracket	1
10	H523 1059	Rail	1
11	H523 1077	Tightener	1
12	H523 1098	Tightener Roller	1
13	H523 5002	Scanner Motor	1
14	H523 1068	Drive Pulley Bracket	1
15	H523 1071	Drive Pulley	1
16	H521 1127	Scanner Shaft Stopper	1
17	H523 1078	Flexible Board Holder	1
18	H523 5320	Lamp Harness	1
19	H523 5001	Stabilizer	1
20	H523 1050	Carriage Ass'y	1
22	H523 1076	Timing Belt	1
23	A193 1844	Cushion:stepper Motor	1
24	5206 2686	Snap Ring	1
25	H523 1087	Wire Spring	1
26	H523 1099	Sensor Spring 2	1
27	H515 3543	E-Ring - Jre4	1
28	H515 3544	E-Ring - Jr-E6	1
29	H523 1086	Sensor Spring 1	1
30	H521 1054	Slider - Carriage	1

Index	Parts No.	Description	Q'ty Per Aseembly

8. LASERUNIT

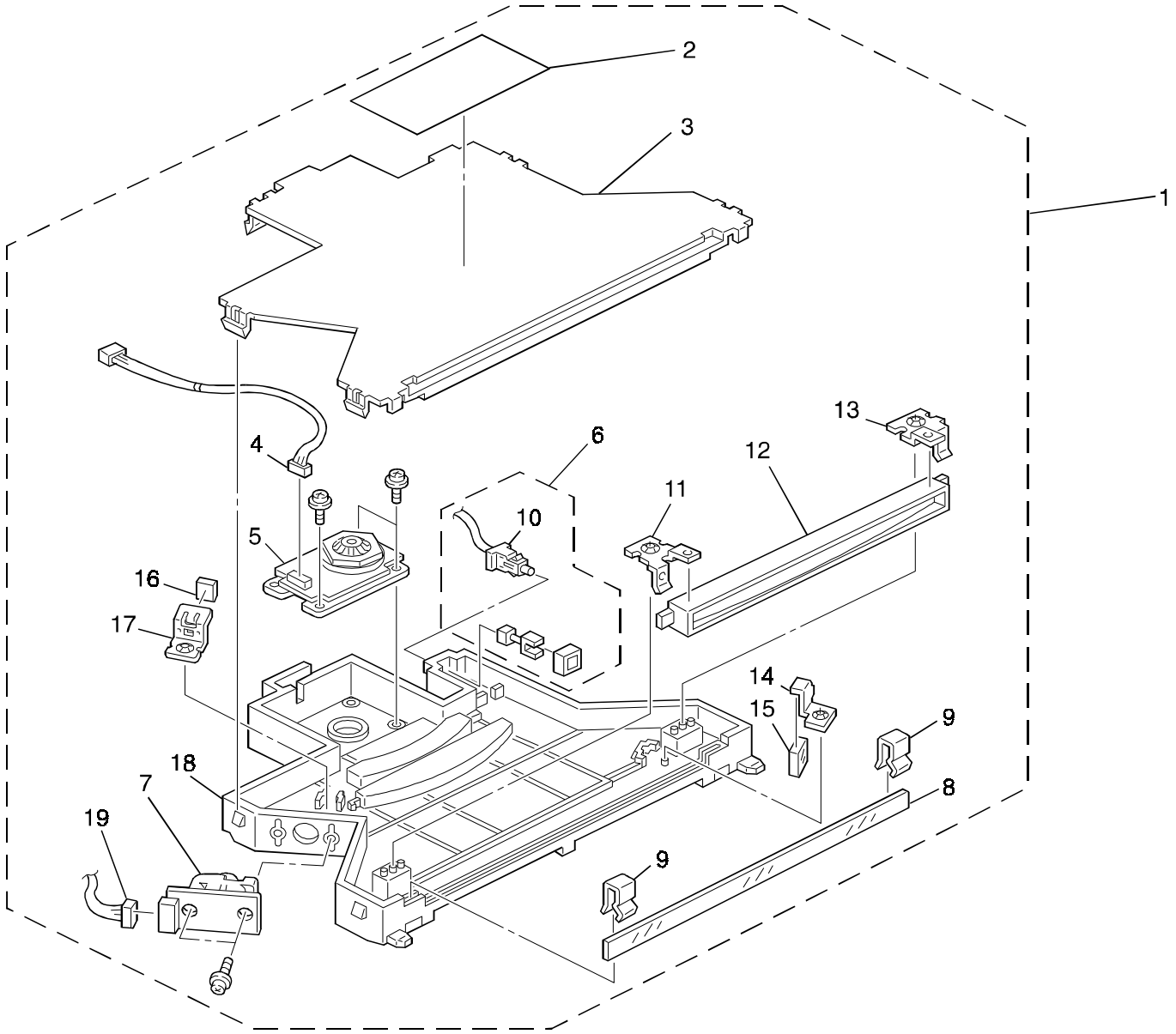

8.IASERUNIT

Index No	Parts No.	Description	Q'ty Per Aseembly
1	H510 4170	Laser Protter Unit	1
2	H521 4056	Decal LD	1
3	H515 2714	Cover - Laser Unit	1
4	H521 5321	Harness - Mirror Motor	1
5	H515 5040	Polygonal Mirror Motor-DC24V 0.35A	1
6	H523 2700	Sync Detector Ass'y	1
7	H515 2715	Laser Diode Unit	1
8	H515 2712	Laser Exposure Glass	1
9	H515 2723	Spring Plate - Exposure Glass	2
10	H515 5044	Optical Fiber - Laser Sync.	1
11	H515 2719	Spring Plate - BTL - Left	1
12	H516 2710	BTL Lens	1
13	H515 2720	Spring Plate - BTL - Right	1
14	H515 2735	Spring Plate - Mirror	1
15	H515 2711	Mirror - Synchronization	1
16	H515 2725	Cylindrical Lens - Laser	1
17	H515 2722	Spring Plate - Lens - Laser	1
18	H515 2713	Plotter Base	1
19	H523 5319	Harness - FCU-LDDR2	1

Index	Parts No.	Description	Q'ty Per Aseembly

9.PAPER FEED SECTION

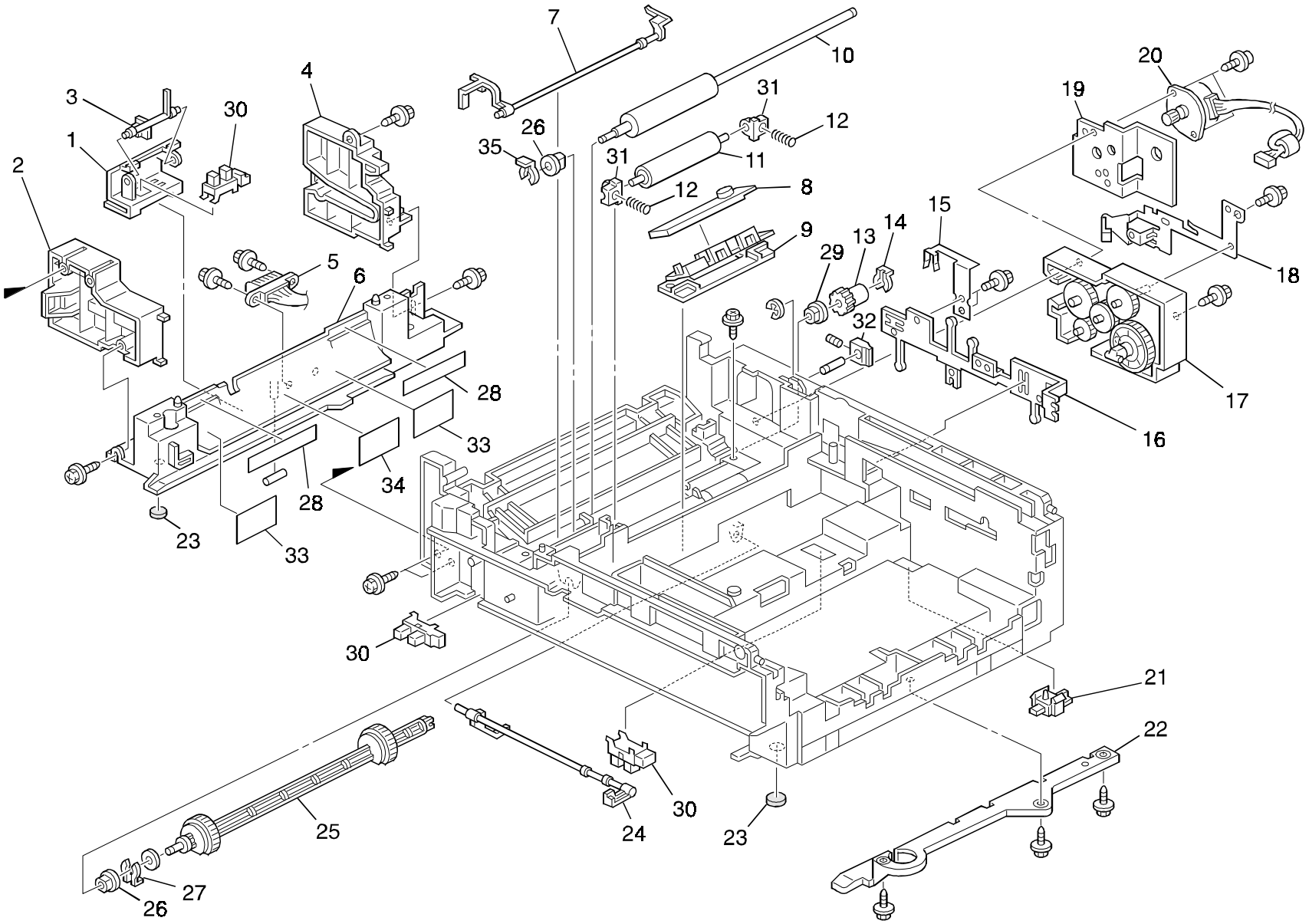

9.PAPER FEED SECTION

Index No	Parts No.	Description	Q'ty Per Aseembly
1	H523 3337	Bracket - Manual Feed Sensor	1
2	H523 3329	Front Rail - OP.Cassette	1
3	H523 3334	Manual Feed Sensor Actuator	1
4	H523 3330	Rear Rail - OP.Cassette	1
5	H523 5362	Harness - Optional Cassette	1
6	H523 3306	Cassette Left Rail	1
7	H523 3336	Registration Sensor Actuator	1
8	G800 1215	Tonner End Sensor	1
9	H516 3146	Bracket - Toner End Sensor	1
10	H523 3313	Registration Roller	1
11	H523 2111	Pressure Roller	1
12	H523 3315	Pressure Roller Spring	2
13	H523 3321	Gear - Registration Roller	1
14	5206 2686	Snap Ring	1
15	H523 3136	Ground Plate - Rear Rail	1
16	H523 3128	Ground Plate - Large	1
17	H523 3119	Gear Ass'y	1
18	H523 3327	Ground Plate - Drive Gear	1
19	H523 3347	Feed Motor Bracket	1
20	H523 5040	Paper Feed Motor	1
21	H515 5018	Cover Switch - Fusing Exit	1
22	H523 3164	Cassette Rail	1
23	H523 3145	Rubber Foot	2
24	H523 3335	Paper End Sensor Actuator	1
25	H523 3307	Paper Feed Roller Ass'y	1
26	H523 3352	Bushing - Paper Feed Roller	2
27	H521 3355	C Ring - Paper Feed Roller	1
28	H523 3344	Guide Plate Mylar	1
29	H523 3328	Bushing - Registration Roller	1
30	H523 5003	Photointerruptor	2
31	G800 3333	Bushing - M4	2
32	H523 3183	Rail Stopper - Rear Left	1
33	H523 3355	Rail Left Mylar	2
34	H523 3356	Registration Mylar	1
35	H006 3533	Snap Ring	1

Index	Parts No.	Description	Q'ty Per Aseembly

10.DEVELOPMENT UNIT

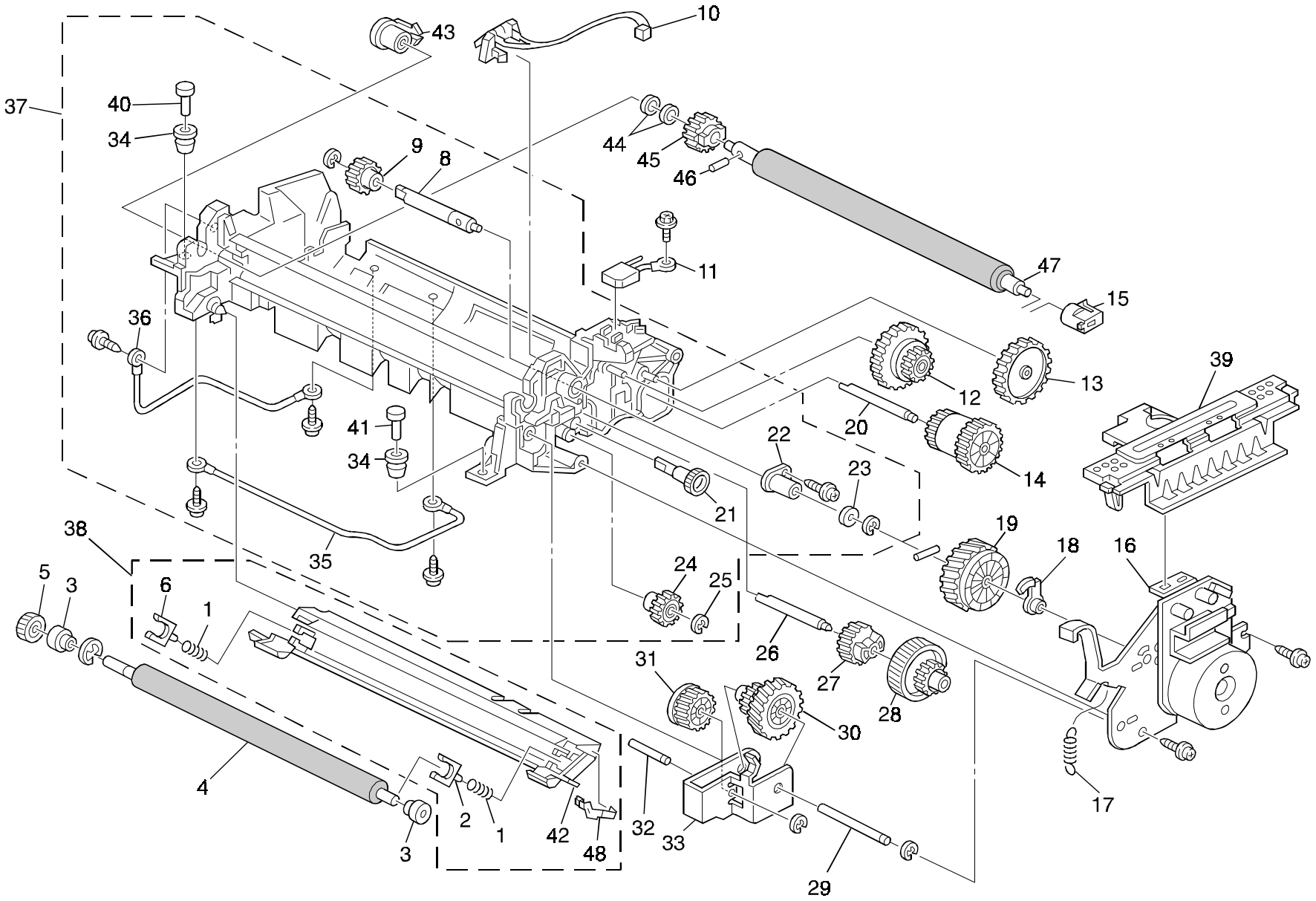

10.DEVELOPMENT UNIT

Index No	Parts No.	Description	Q'ty Per Aseembly
1	H523 2447	Spring - Transfer Roller	2
2	H515 2456	Holder - Transfer Roller - Right	1
3	H515 2461	Transfer Roller	1
4	H516 2404	Transfer Roller Ass'y	1
5	H515 2452	Gear - Transfer Roller	1
6	H515 2455	Holder - Transfer Roller - Left	1
8	H515 2463	Shaft - Idler 2	1
9	H523 2451	Drum Drive Gear	1
10	H515 2417	Terminal - Quenching Lamp	1
11	H515 5034	Diode	1
12	H515 2447	Idler Gear 3	1
13	H515 2448	Idler Gear 4	1
14	H515 2449	Idler Gear 5	1
15	H515 2415	Bearing - Dvlp. Roller - Right	1
16	H523 2428	Main Motor	1
17	H515 2495	Spring - Bracket - Fusing Drive	1
18	H515 2458	Bushing - Idler 2 - Small	1
19	H515 2445	Idler Gear 2 - Large	1
20	H515 2466	Shaft - Idler 5	1
21	H515 2413	Gear - Agitator	1
22	H523 2453	Bushing - Idler 2 Large	1
23	H041 2257	Washer - M5.2x0.4	1
24	H515 2442	Gear - MAG. Roller	1
25	H515 2542	Stopper - Bearing - M6	1
26	H515 2462	Shaft - Idler 1	1
27	H515 2443	Idler Gear 1 - Small	1
28	H515 2444	Idler Gear 1 - Large	1
29	H515 2467	Shaft - Idler 6	1
30	H515 2450	Idler Gear 6	1
31	H515 2493	Drive Gear - Fusing	1
32	H515 2494	Shaft - Drive Gear - Fusing	1
33	H523 2492	Fusing Drive Bracket	1
34	H515 2488	Stopper - Receptacle	2
35	H516 5046	Cable - Transfer Bias - A4	1
36	H516 5045	Cable - Charge Bias - A4	1
37	H523 2403	Development Unit	1
38	H523 2405	Transfer Guide Ass'y	1

Index	Parts No.	Description	Q'ty Per Aseembly
39	H523 3162	Inner Cover	1
40	H515 2487	Stopper - Pin	1
41	H515 2554	Stopper - Pin - L	1
42	H516 2498	Guide Plate - Transfer - A4	1
43	H512 32418	Front Ball Bearing - Development	1
44	H041 2257	Washer - M5.2x0.4	2
45	H515 2550	Gear - Rubber Roller -Z18	1
46	H516 2519	Rubber Roller - Development - A4	1

11.FUSING UNIT

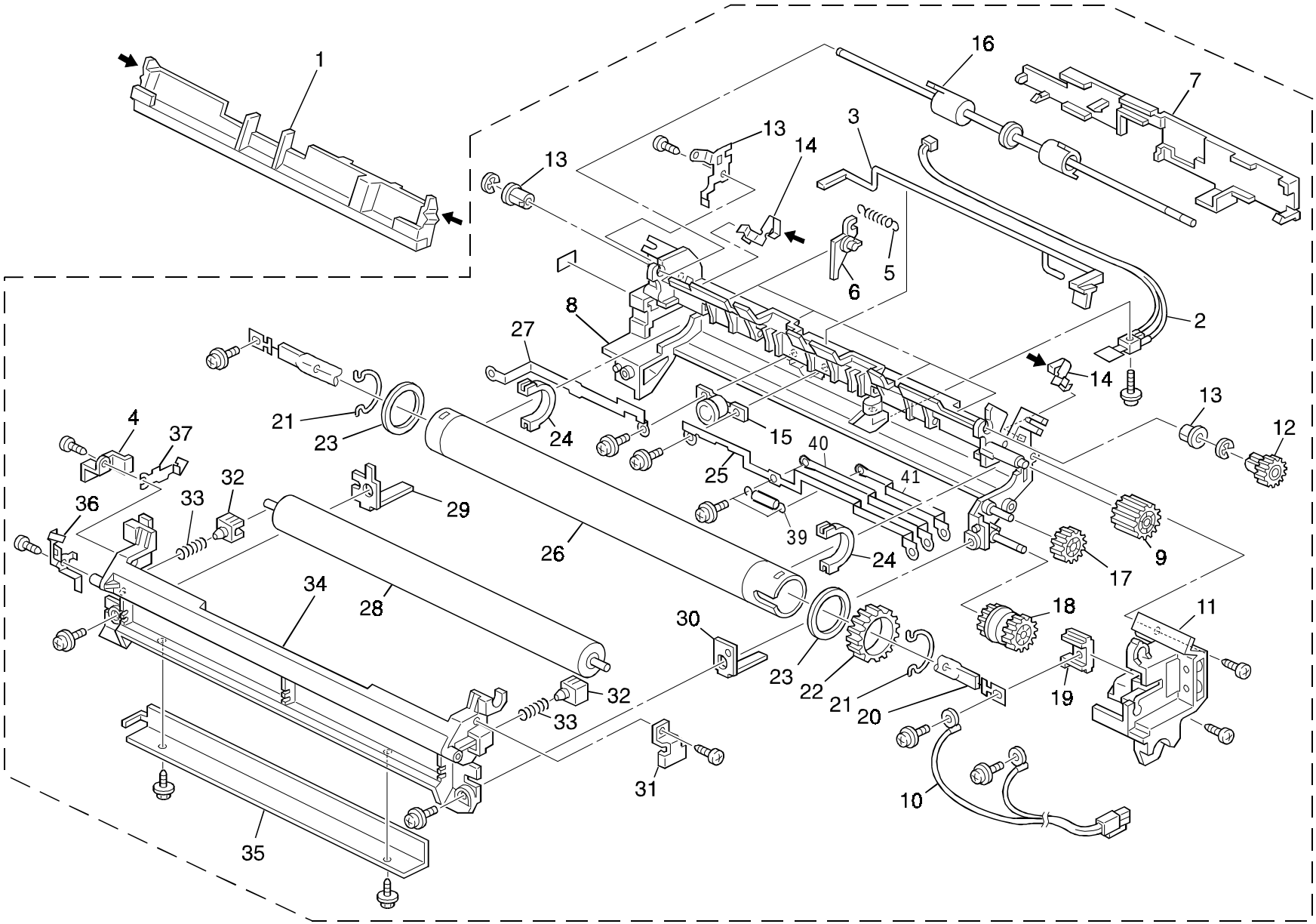

11.FUSING UNIT

Index No	Parts No.	Description	Q'ty Per Aseembly
1	H523 2150	Cleaning Felt Ass'y	1
2	H523 5020	Fusing Thermistor	1
3	H523 2149	Paper Exit Actuator	1
4	H515 2177	Bracket - Pressure Roller - Left	1
5	H515 2153	Spring - Hot Roller Stripper	4
6	H515 2181	Separation Hook - Fusing	4
7	H523 2159	Fusing Top Cover	1
8	H523 2112	Fusing Upper Cover	1
9	H515 2127	Idler Gear - Z18	1
10	H523 5022	Fusing Harness (Asia)	1
10	H523 5025	Fusing Harness (EU/France)	1
11	H523 2119	Fusing Driver Cover	1
12	H515 2128	Gear - Fusing Exit Roller	1
13	H523 2156	Ground Plate:Hot Roller	2
14	H515 2168	Lock Spring - Cleaning Pad	2
15	H515 5017	Thermostat - Fusing	1
16	H523 2117	Exit Roller	1
17	H515 2125	Idler Gear - Z17	1
18	H515 2124	Idler Gear - Z22-18	1
19	H515 2167	Holder - Fusing Lamp	1
20	H523 5024	Fusing Lamp - 230V	1
21	H515 2160	Stopper - Hot Roller	2
22	H523 2126	Fusing Gear	1
23	H515 2141	Spacer - Hot Roller	2
24	H515 2137	Bearing - Hot Roller	2
25	H515 2145	Terminal Plate - Thermostat - 1	1
26	H516 2110	Roller - Fusing - A4	1
27	H516 2146	Terminal Plate - Thermostat - 2	1
28	H523 2111	Fusing Pressure Roller	1
29	H523 2164	Rear Spring Plate - Guide	1
30	H523 2163	Front Spring Plate - Guide	1
31	H515 2176	Bracket - Pressure Roller - Right	1
32	H515 2169	Bearing - Pressure Roller	2
33	H523 2154	Spring - Pressure Roller	2
34	H523 2116	Lower Fusing Cover	1
35	H523 2173	Fusing Guide	1
36	H523 2171	Spring Plate - Pressure Roller	1

Index	Parts No.	Description	Q'ty Per Aseembly
37	H523 2124	Spring Plate - Coupling	1
38	H523 2139	Bushing - Fusing Exit Roler	1
39	H516 5018	Thermofuse	1
40	H516 2133	Terminal Plate - Thermofuse - Rear	1
41	H516 2134	Terminal Plate - Thermofuse - Front	1

12.PAPER EXIT SECTION 1

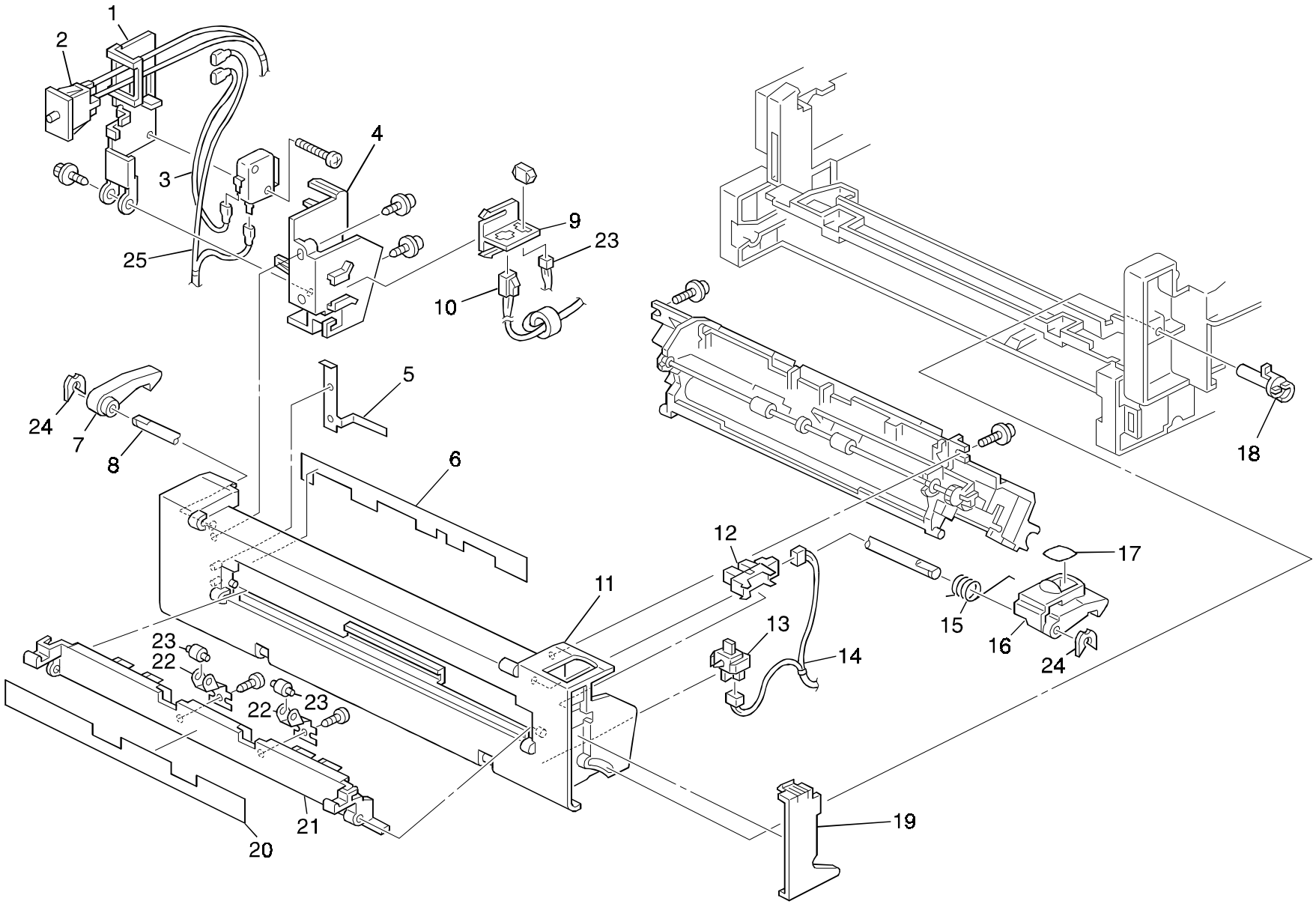

12.PAPER EXIT SECTION 1

Index No	Parts No.	Description	Q'ty Per Aseembly
1	H523 2158	Interlock Switch Bracket	1
2	H523 5336	Interlock Switch	1
3	H523 5329	Relay Harness	1
4	H523 2157	Inner Cover - Interlock Switch	1
5	H523 2123	Ground Plate - Exit	1
6	H523 2152	Discharge Brush - Exit	1
7	H523 2134	Lock Lever	1
8	H523 2135	Fusing Lock Shaft	1
9	H523 2160	Connector Holder	1
10	H523 5331	Fusing Harness	1
11	H523 2118	Left Cover	1
12	H523 5003	Photointerruptor	1
13	H515 5018	Cover Switch - Fusing Exit	1
14	H523 5373	Harness - FCU-Exit Sensor	1
15	H523 2136	Lock Lever Spring	1
16	H523 2133	Front Lock Lever	1
17	H523 2132	Lock Lever Sheet	1
18	H523 3146	Stopper:Fusing	1
19	H523 2165	Front Inner Cover	1
20	H523 2185	Decal - Warning (High Temperature)	1
21	H523 2120	Exit Cover	1
22	H523 2121	Spring Plate - Exit	2
23	H523 2125	Fusing Exit Roller	2
24	H523 2140	Retaining Ring:JR-E3	1
25	H523 5331	Harness:Heater:Connecting	1

Index	Parts No.	Description	Q'ty Per Aseembly

13.FRAME AND ELECTRICAL SECTION 1

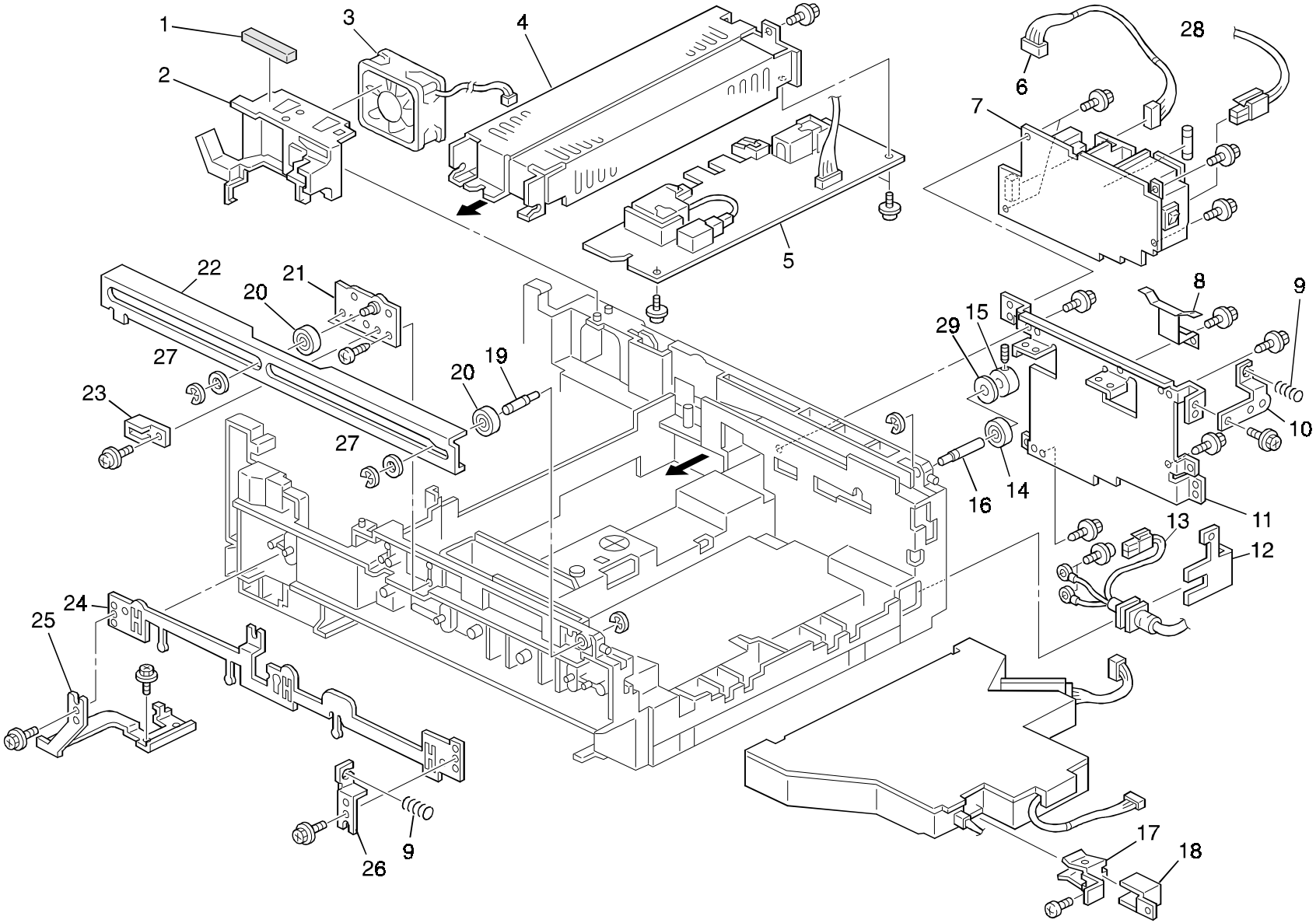

13.FRAME AND ELECTRICAL SECTION 1

Index No	Parts No.	Description	Q'ty Per Aseembly
1	H523 3166	Upper Duct Shield	1
2	H523 3143	Duct	1
3	H523 5035	Ozone Fan Motor	1
4	H523 3149	Power Pack Bracket	1
5	H523 5037	Power Pack	1
6	H523 5356	PSU Harness	1
7	H523 5441	PCB - PSU 230V	1
8	H523 3134	Right Ground Plate - Rear	1
9	H523 3141	Slide Spring	1
10	H523 3135	Ground Spring Plate - Rear	1
11	H523 3126	PSU Bracket	1
12	H523 3139	Power Cord Stay	1
13	H523 5338	Power Cord Harness	1
14	H523 3161	Rear Roller Rail	1
15	H523 3184	Rail Stopper - Rear Right	1
16	H523 3158	Rear Lock Shaft	1
17	H515 2724	Clip - Laser Unit	1
18	H515 2734	Bracket - Base	1
19	H523 3157	Front Lock Shaft	1
20	H523 3160	Front Roller Rail	2
21	H523 3153	Rail Bracket	1
22	H523 1102	Front Rail Ass'y	1
23	H523 3163	Rail Stopper	1
24	H523 3127	Ground Plate - Front	1
25	H523 3130	Ground Plate - Development	1
26	H523 3132	Ground Plate - Spring	1
27	H053 1174	Washer M6 - Scanner Unit	1
28	H523 5331	Relay Harness	1
29	H523 3185	Washer - 6.2	1

Index	Parts No.	Description	Q'ty Per Aseembly

14.FRAME AND ELECTRICAL SECTION 2

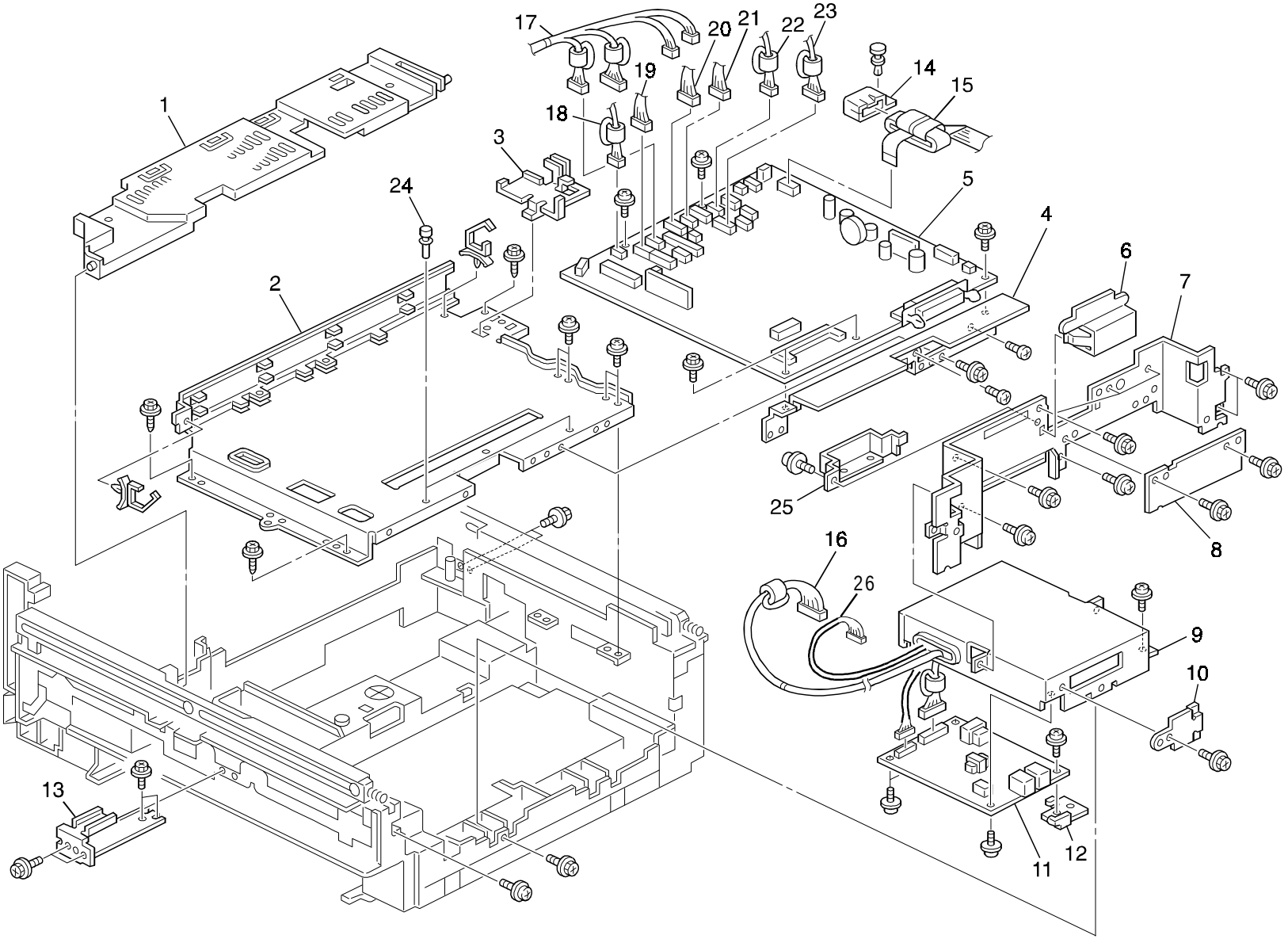

14.FRAME AND ELECTRICAL SECTION 2

Index No	Parts No.	Description	Q'ty Per Aseembly
1	H523 3165	Inner Cover - Harness	1
2	H523 3121	PCB Stay	1
3	H523 3125	Harness Clamp	1
4	H523 3122	PCB Bracket	1
5	H523 6140	PCB - FCU - LFO - EUR	1
6	H523 3152	Cover RS422	1
7	H523 3124	Panel - Inner Cover RS422	1
8	H523 3151	Cover RS232C	1
9	H523 3137	NCU Bracket	1
10	H523 3150	NCU Cover	1
11	5488 6053	PCB - NCU- EUR/Asia	1
11	5488 6073	PCB - NCU- France	1
12	H523 3142	NCU Bracket	1
13	H523 3131	Ground Plate - NCU Bracket	1
14	1105 0454	Cover - Ferrite Core	1
15	H523 5320	Harness - CIS	1
16	H523 5354	Harness - NCU1	1
17	H523 5364	Harness - Scanner	1
18	H523 5379	Harness - Thermistor	1
19	H523 5309	Harness - FCU-Prse2	1
20	H523 5318	Harness - LDDR	1
21	H523 5316	Harness - FCU-Prse1	1
22	H523 5375	Harness - FCU-PRMT	1
23	H523 5377	Harness - FCU-MAMT	1
24	A422 1108	Stopper	1
25	H523 3168	Cover:Behind:422	1
26	H523 5358	Harness - NCU2	1

Index	Parts No.	Description	Q'ty Per Aseembly

15.OPTION CASSETTE

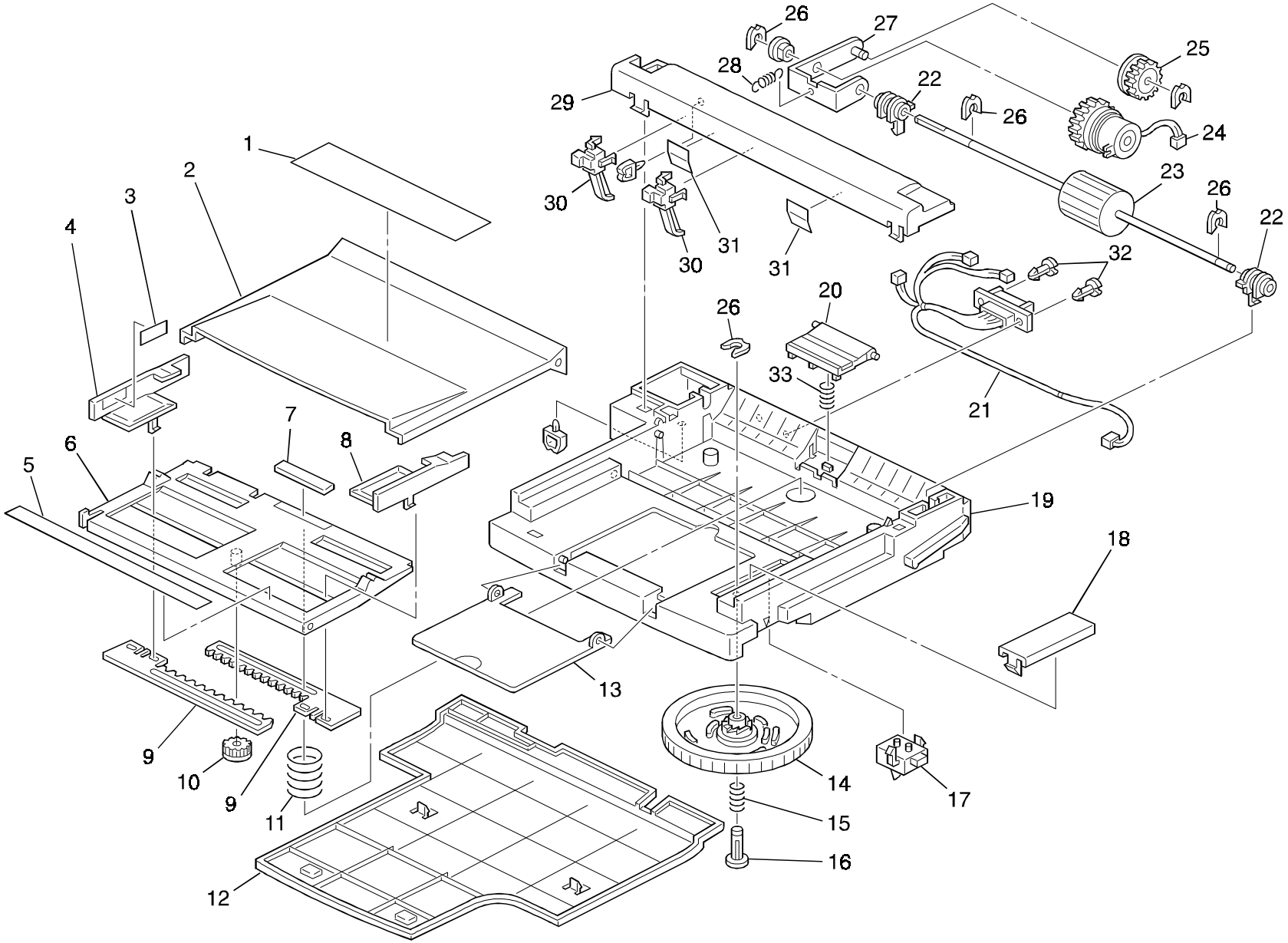

15.OPTION CASSETTE

Index No	Parts No.	Description	Q'ty Per Aseembly
1	H523 3451	Decal - Papaer Set	1
2	H523 3439	Cassette Cover	1
3	H522 3411	Decal:Side Fence:R	1
4	H523 3416	Paper Guide Rear	1
5	H523 3452	Decal - Paper Size	1
6	H523 3412	Base PlateE	1
7	H523 3444	Pad - Bottom Plate	1
8	H523 3415	Paper Guide - Front	1
9	A053 2816	Side Fence Gear	2
10	AB01 3492	Gear - 16Z	1
11	H523 3414	Cover - Bottom Cover	1
12	H523 3441	Bottom Cover	1
13	H523 3438	Paper Tray	1
14	H523 3432	Papaer Size Detector	1
15	H515 3535	Spring - Paper Size	1
16	H515 3538	Shaft - Paper Size	1
17	H515 5054	Paper Size Sensor	1
18	H523 3437	Sensor Cover	1
19	H523 3411	Cassette Base	1
20	H523 3418	Separation Pad Ass'y	1
21	H523 5326	Relay Harness Ass'y	1
22	H523 3423	Bushing - Paper Feed	2
23	H523 3422	Paper Feed Roller	1
24	H523 5050	Magnetic Clutch -	1
25	H523 3426	Transfer Gear	1
26	H515 3543	E-Ring- JRE4	3
27	H523 3427	Bracket - Drive Transfer	1
28	H523 3430	Drive Transfer Spring	1
29	H523 3440	Upper Cover	1
30	H523 5051	Paper End Sensor	2
31	H523 3443	Mylar - Paper Guide	2
32	H515 3542	Rivet	2
33	H523 3421	Spring - Separation	1

Index	Parts No.	Description	Q'ty Per Aseembly

PARTS INDEX

Parts No.	Description.	Page And Index No.
1105 0454	Cover - Ferrite Core	29 - 14
5206 2686	Snap Ring	15 - 24
5206 2686	Snap Ring	13 - 19
5206 2686	Snap Ring	19 - 14
5488 6053	PCB - NCU- EUR/Asia	29 - 11
5488 6073	PCB - NCU- France	29 - 11
A053 2816	Side Fence Gear	3 - 6
A053 2816	Side Fence Gear	31 - 9
A193 1844	Cushion:stepper Motor	15 - 23
A422 1108	Stopper	29 - 24
AB01 3492	Gear - 16Z	31 - 10
AB01 3492	Gear - 16Z	3 - 7
G800 1215	Tonner End Sensor	19 - 8
G800 3333	Bushing - M4	19 - 31
H001 4221	Harness Clamper	11 - 44
H006 3533	Snap Ring	19 - 35
H041 2257	Washer - M5.2x0.4	21 - 23
H041 2257	Washer - M5.2x0.4	21 - 44
H053 1174	Washer M6 - Scanner Unit	27 - 27
H510 4170	Laser Protter Unit	17 - 1
H512 32418	Front Ball Bearing - Development	21 - 43
H515 2124	Idler Gear - Z22-18	23 - 18
H515 2125	Idler Gear - Z17	23 - 17
H515 2127	Idler Gear - Z18	23 - 9
H515 2128	Gear - Fusing Exit Roller	23 - 12
H515 2137	Bearing - Hot Roller	23 - 24
H515 2141	Spacer - Hot Roller	23 - 23
H515 2145	Terminal Plate - Thermostat - 1	23 - 25
H515 2153	Spring - Hot Roller Stripper	23 - 5
H515 2160	Stopper - Hot Roller	23 - 21

Parts No.	Description.	Page And Index No.
H515 2167	Holder - Fusing Lamp	23 - 19
H515 2168	Lock Spring - Cleaning Pad	23 - 14
H515 2169	Bearing - Pressure Roller	23 - 32
H515 2176	Bracket - Pressure Roller - Right	23 - 31
H515 2177	Bracket - Pressure Roller - Left	23 - 4
H515 2181	Separation Hook - Fusing	23 - 6
H515 2413	Gear - Agitator	21 - 21
H515 2415	Bearing - Dvlp. Roller - Right	21 - 15
H515 2417	Terminal - Quenching Lamp	21 - 10
H515 2442	Gear - MAG. Roller	21 - 24
H515 2443	Idler Gear 1 - Small	21 - 27
H515 2444	Idler Gear 1 - Large	21 - 28
H515 2445	Idler Gear 2 - Large	21 - 19
H515 2447	Idler Gear 3	21 - 12
H515 2448	Idler Gear 4	21 - 13
H515 2449	Idler Gear 5	21 - 14
H515 2450	Idler Gear 6	21 - 30
H515 2452	Gear - Transfer Roller	21 - 5
H515 2455	Holder - Transfer Roller - Left	21 - 6
H515 2456	Holder - Transfer Roller - Right	21 - 2
H515 2458	Bushing - Idler 2 - Small	21 - 18
H515 2461	Transfer Roller	21 - 3
H515 2462	Shaft - Idler 1	21 - 26
H515 2463	Shaft - Idler 2	21 - 8
H515 2466	Shaft - Idler 5	21 - 20
H515 2467	Shaft - Idler 6	21 - 29
H515 2487	Stopper - Pin	21 - 40
H515 2488	Stopper - Receptacle	21 - 34
H515 2493	Drive Gear - Fusing	21 - 31
H515 2494	Shaft - Drive Gear - Fusing	21 - 32

Parts No.	Description.	Page And Index No.
H515 2495	Spring - Bracket - Fusing Drive	21 - 17
H515 2542	Stopper - Bearing - M6	21 - 25
H515 2550	Gear - Rubber Roller -Z18	21 - 45
H515 2554	Stopper - Pin - L	21 - 41
H515 2711	Mirror - Synchronization	17 - 15
H515 2712	Laser Exposure Glass	17 - 8
H515 2713	Plotter Base	17 - 18
H515 2714	Cover - Laser Unit	17 - 3
H515 2715	Laser Diode Unit	17 - 7
H515 2719	Spring Plate - BTL - Left	17 - 11
H515 2720	Spring Plate - BTL - Right	17 - 13
H515 2722	Spring Plate - Lens - Laser	17 - 17
H515 2723	Spring Plate - Exposure Glass	17 - 9
H515 2724	Clip - Laser Unit	27 - 17
H515 2725	Cylindrical Lens - Laser	17 - 16
H515 2734	Bracket - Base	27 - 18
H515 2735	Spring Plate - Mirror	17 - 14
H515 3535	Spring - Paper Size	31 - 15
H515 3538	Shaft - Paper Size	31 - 16
H515 3542	Rivet	31 - 32
H515 3543	E-ring - Jre4	9 - 10
H515 3543	E-Ring - Jre4	15 - 27
H515 3543	E-Ring- JRE4	31 - 26
H515 3544	E-Ring - Jr-E6	15 - 28
H515 5017	Thermostat - Fusing	23 - 15
H515 5018	Cover Switch - Fusing Exit	19 - 21
H515 5018	Cover Switch - Fusing Exit	25 - 13
H515 5034	Diode	21 - 11
H515 5040	Polygonal Mirror Motor-DC24V 0.35A	17 - 5
H515 5044	Optical Fiber - Laser Sync.	17 - 10

Parts No.	Description.	Page And Index No.
H515 5049	Speaker (Asia)	5 - 29
H515 5054	Paper Size Sensor	31 - 17
H516 2110	Roller - Fusing - A4	23 - 26
H516 2133	Terminal Plate - Thermofuse - Rear	23 - 40
H516 2134	Terminal Plate - Thermofuse - Front	23 - 41
H516 2146	Terminal Plate - Thermostat - 2	23 - 27
H516 2404	Transfer Roller Ass'y	21 - 4
H516 2498	Guide Plate - Transfer - A4	21 - 42
H516 2519	Rubber Roller - Development - A4	21 - 46
H516 2528	Sheield - Rubber Roller - A4	3 - 8
H516 2710	BTL Lens	17 - 12
H516 3146	Bracket - Toner End Sensor	19 - 9
H516 3425	Lock - Bottom Plate	7 - 9
H516 3426	Spring - Lock - Bottom Plate	7 - 10
H516 5018	Thermofuse	23 - 39
H516 5045	Cable - Charge Bias - A4	21 - 36
H516 5046	Cable - Transfer Bias - A4	21 - 35
H521 1054	Slider - Carriage	15 - 30
H521 1127	Scanner Shaft Stopper	15 - 16
H521 3355	C Ring - Paper Feed Roller	19 - 27
H521 3419	Bottom Plate Pad	7 - 1
H521 4033	Copy Tray Extension	3 - 1
H521 4056	Decal LD	17 - 2
H521 5321	Harness - Mirror Motor	17 - 4
H522 3411	Decal:Side Fence:R	31 - 3
H523 1050	Carriage Ass'y	15 - 20
H523 1059	Rail 15 - 10	
H523 1060	Stay Bracket 1	13 - 17
H523 1062	Stay Bracket 3	13 - 1
H523 1063	Stay Bracket 4	13 - 20

Parts No.	Description.	Page And Index No.
H523 1065	Driven Roller Bracket	15 - 9
H523 1068	Drive Pulley Bracket	15 - 14
H523 1071	Drive Pulley	15 - 15
H523 1072	Driven Pulley	15 - 7
H523 1073	Exposure Glass	11 - 38
H523 1074	Scanner Wire	15 - 6
H523 1075	Slider Shaft	15 - 1
H523 1076	Timing Belt	15 - 22
H523 1077	Tightener	15 - 11
H523 1078	Flexible Board Holder	15 - 17
H523 1079	Carriage Stopper	13 - 5
H523 1080	Front Lock Bracket	13 - 10
H523 1083	Rear Lock Bracket	13 - 7
H523 1086	Sensor Spring 1	15 - 29
H523 1087	Wire Spring	15 - 25
H523 1088	Sheet - Flexible Board	15 - 4
H523 1089	Fusing Sponge 1	13 - 2
H523 1090	CMT Stopper	13 - 3
H523 1091	Shaft Cover	15 - 8
H523 1094	Motor Bracket	11 - 3
H523 1096	Sensor Bracket	11 - 2
H523 1097	Exposure Glass Bracket	11 - 39
H523 1098	Tightener Roller	15 - 12
H523 1099	Sensor Spring 2	15 - 26
H523 1101	Rear Rail	13 - 6
H523 1102	Front Rail Ass'y	27 - 22
H523 1103	Lock Lever	13 - 8
H523 1104	Lock Spring	13 - 11
H523 1105	Lock Handle	13 - 9
H523 1106	CMT Spring Plate	13 - 13

Parts No.	Description.	Page And Index No.
H523 1107	Pressure Spring Plate	13 - 12
H523 1110	Base Sheet 1	15 - 3
H523 1111	Base Sheet 2	15 - 5
H523 1112	Fusing Sponge 2	13 - 22
H523 1113	CMT Sponge 1	13 - 14
H523 1114	CMT Sponge 2	13 - 18
H523 1115	CMT Sponge 3	13 - 16
H523 1116	CMT Sponge 4	13 - 15
H523 1121	Stay Bracket 5	13 - 23
H523 1122	Bracket -On Off Detector	13 - 4
H523 1250	Pickup Roller	11 - 31
H523 1251	Feed Roller	11 - 18
H523 1252	Separation Roller	9 - 24
H523 1254	R1 Roller	9 - 17
H523 1255	R2 Roller	9 - 31
H523 1256	Cover Guide	9 - 5
H523 1257	Lower Guide	11 - 34
H523 1258	Exit Guide	9 - 37
H523 1259	Separation Roller Bracket	9 - 21
H523 1260	Fusing Cover	5 - 19
H523 1261	Pressure Plate - Pickup	9 - 8
H523 1263	Scale	11 - 36
H523 1264	Gear - Slow Down	11 - 4
H523 1265	Front Feed Gear	11 - 22
H523 1266	Feed Gear - Rear	11 - 16
H523 1267	Front Drive Gear	9 - 2
H523 1268	Middle Drive Gear	9 - 22
H523 1270	Gear - R1	9 - 16
H523 1271	Idler Gear - R2	9 - 12
H523 1272	Idle Gear - Pickup	11 - 33

Parts No.	Description.	Page And Index No.
H523 1273	Pickup Gear	11 - 28
H523 1274	Shading Sheet	11 - 37
H523 1275	Feed Roller Shaft	11 - 15
H523 1276	Separathin Drive Shaft	9 - 20
H523 1278	Lock Holder	11 - 26
H523 1280	R2 Pressure Roller	9 - 34
H523 1281	S2 Lever	11 - 32
H523 1282	Sheet - Pressure Plate	9 - 29
H523 1283	Bushing - R1	9 - 18
H523 1284	Bushing - Pressure R2	9 - 35
H523 1285	Drive Bushing	9 - 4
H523 1287	Pickup Roller Collar	11 - 30
H523 1288	Pickup Roller Shaft	11 - 27
H523 1289	Reverse Shaft	9 - 23
H523 1290	Pressure Shaft - R1	11 - 20
H523 1291	Hook - Pressure Plate	9 - 28
H523 1292	Spring - Pressure R1	11 - 13
H523 1293	Spring - Pressure Plate	9 - 7
H523 1294	Pickup Roller Spring	11 - 29
H523 1295	Feed Spring	11 - 19
H523 1297	Spring - Pressure R2	9 - 36
H523 1298	Spring - Pressure Plate	9 - 27
H523 1299	Spring - Slide Bearing	9 - 3
H523 1300	Earth Spring	9 - 13
H523 1301	Front Cover Sheet	9 - 1
H523 1302	Rear Cover Sheet	9 - 11
H523 1303	Discharge Brush	9 - 33
H523 1305	Gear - R2	9 - 14
H523 1306	Bushing - R2	9 - 15
H523 1307	Front Sheet - discharge Brush	9 - 32

Parts No.	Description.	Page And Index No.
H523 1309	S1 Lever	9 - 6
H523 1311	Feed Gear - Middle	11 - 14
H523 1314	Pulley - R2	9 - 38
H523 1315	Timing Belt	11 - 7
H523 1318	Roller Collar - R2	9 - 30
H523 1319	Spring Plate - Tightener	11 - 9
H523 1321	Pulley - Slow Down	11 - 6
H523 1322	Spring Clutch - Feed	11 - 17
H523 1323	Sensor Bracket	11 - 12
H523 1324	Pulley Bracket	11 - 5
H523 1325	Ground Plate - Pressure Plate	9 - 26
H523 1326	Front Feed Shaft	11 - 23
H523 1327	Collar - Feed Shaft	11 - 24
H523 1328	Tightener Rollre	11 - 8
H523 1329	Pulley Shaft	11 - 10
H523 1332	Decal - Left Scale	11 - 35
H523 1333	Supporting Plate - Lock Holder	11 - 25
H523 1334	Ground Plate - R1	9 - 19
H523 1335	Rear Sheet - Pressure Plate	9 - 9
H523 1337	Reverse Roller Collar	9 - 25
H523 1338	Harness Holder Sheet	11 - 41
H523 1345	ADF Mylar - 1	11 - 42
H523 1346	ADF Mylar - 2	11 - 43
H523 1350	Pressure Roller - R1	11 - 21
H523 2111	Pressure Roller	19 - 11
H523 2111	Fusing Pressure Roller	23 - 28
H523 2112	Fusing Upper Cover	23 - 8
H523 2116	Lower Fusing Cover	23 - 34
H523 2117	Exit Roller	23 - 16
H523 2118	Left Cover	25 - 11

Parts No.	Description.	Page And Index No.
H523 2119	Fusing Driver Cover	23 - 11
H523 2120	Exit Cover	25 - 21
H523 2121	Spring Plate - Exit	25 - 22
H523 2123	Ground Plate - Exit	25 - 5
H523 2124	Spring Plate - Coupling	23 - 37
H523 2125	Fusing Exit Roller	25 - 23
H523 2126	Fusing Gear	23 - 22
H523 2132	Lock Lever Sheet	25 - 17
H523 2133	Front Lock Lever	25 - 16
H523 2134	Lock Lever	25 - 7
H523 2135	Fusing Lock Shaft	25 - 8
H523 2136	Lock Lever Spring	25 - 15
H523 2139	Bushing - Fusing Exit Roler	23 - 38
H523 2140	Retaining Ring:JR-E3	25 - 24
H523 2149	Paper Exit Actuator	23 - 3
H523 2150	Cleaning Felt Ass'y	23 - 1
H523 2152	Discharge Brush - Exit	25 - 6
H523 2154	Spring - Pressure Roller	23 - 33
H523 2156	Ground Plate:Hot Roller	23 - 13
H523 2157	Inner Cover - Interlock Switch	25 - 4
H523 2158	Interlock Switch Bracket	25 - 1
H523 2159	Fusing Top Cover	23 - 7
H523 2160	Connector Holder	25 - 9
H523 2163	Front Spring Plate - Guide	23 - 30
H523 2164	Rear Spring Plate - Guide	23 - 29
H523 2165	Front Inner Cover	25 - 19
H523 2171	Spring Plate - Pressure Roller	23 - 36
H523 2173	Fusing Guide	23 - 35
H523 2185	Decal - Warning (High Temperature)	25 - 20
H523 2403	Development Unit	21 - 37

Parts No.	Description.	Page And Index No.
H523 2405	Transfer Guide Ass'y	21 - 38
H523 2428	Main Motor	21 - 16
H523 2447	Spring - Transfer Roller	21 - 1
H523 2451	Drum Drive Gear	21 - 9
H523 2453	Bushing - Idler 2 Large	21 - 22
H523 2492	Fusing Drive Bracket	21 - 33
H523 2700	Sync Detector Ass'y	17 - 6
H523 3119	Gear Ass'y	19 - 17
H523 3121	PCB Stay	29 - 2
H523 3122	PCB Bracket	29 - 4
H523 3124	Panel - Inner Cover RS422	29 - 7
H523 3125	Harness Clamp	29 - 3
H523 3126	PSU Bracket	27 - 11
H523 3127	Ground Plate - Front	27 - 24
H523 3128	Ground Plate - Large	19 - 16
H523 3130	Ground Plate - Development	27 - 25
H523 3131	Ground Plate - NCU Bracket	29 - 13
H523 3132	Ground Plate - Spring	27 - 26
H523 3134	Right Ground Plate - Rear	27 - 8
H523 3135	Ground Spring Plate - Rear	27 - 10
H523 3136	Ground Plate - Rear Rail	19 - 15
H523 3137	NCU Bracket	29 - 9
H523 3139	Power Cord Stay	27 - 12
H523 3141	Slide Spring	27 - 9
H523 3142	NCU Bracket	29 - 12
H523 3143	Duct	27 - 2
H523 3145	Rubber Foot	19 - 23
H523 3146	Stopper:Fusing	25 - 18
H523 3149	Power Pack Bracket	27 - 4
H523 3150	NCU Cover	29 - 10

Parts No.	Description.	Page And Index No.
H523 3151	Cover RS232C	29 - 8
H523 3152	Cover RS422	29 - 6
H523 3153	Rail Bracket	27 - 21
H523 3157	Front Lock Shaft	27 - 19
H523 3158	Rear Lock Shaft	27 - 16
H523 3160	Front Roller Rail	27 - 20
H523 3161	Rear Roller Rail	27 - 14
H523 3162	Inner Cover	21 - 39
H523 3163	Rail Stopper	27 - 23
H523 3164	Cassette Rail	19 - 22
H523 3165	Inner Cover - Harness	29 - 1
H523 3166	Upper Duct Shield	27 - 1
H523 3168	Cover:Behind:422	29 - 25
H523 3183	Rail Stopper - Rear Left	19 - 32
H523 3184	Rail Stopper - Rear Right	27 - 15
H523 3185	Washer - 6.2	27 - 29
H523 3195	Ozone Filter	3 - 12
H523 3301	Paper Cassette	7 - 12
H523 3302	Bottom Plate	7 - 2
H523 3303	Corner Separator - Rear	7 - 7
H523 3304	Spring - Bottom Plate	7 - 3
H523 3306	Cassette Left Rail	19 - 6
H523 3307	Paper Feed Roller Ass'y	19 - 25
H523 3312	Front Corner Separator	7 - 4
H523 3313	Registration Roller	19 - 10
H523 3315	Pressure Roller Spring	19 - 12
H523 3321	Gear - Registration Roller	19 - 13
H523 3327	Ground Plate - Drive Gear	19 - 18
H523 3328	Bushing - Registration Roller	19 - 29
H523 3329	Front Rail - OP.Cassette	19 - 2

Parts No.	Description.	Page And Index No.
H523 3330	Rear Rail - OP.Cassette	19 - 4
H523 3331	Manual Feed Table	3 - 5
H523 3332	Manual Feed Guide - Front	3 - 3
H523 3333	Manual Feed Guide - Rear	3 - 4
H523 3334	Manual Feed Sensor Actuator	19 - 3
H523 3335	Paper End Sensor Actuator	19 - 24
H523 3336	Registration Sensor Actuator	19 - 7
H523 3337	Bracket - Manual Feed Sensor	19 - 1
H523 3338	Front - Side Fence	7 - 5
H523 3339	Rear - Side Fence	7 - 6
H523 3340	Right Side Fence	7 - 11
H523 3341	Cassette End Fence	7 - 8
H523 3344	Guide Plate Mylar	19 - 28
H523 3345	Spring Plate:End Fence	7 - 13
H523 3347	Feed Motor Bracket	19 - 19
H523 3348	Decal - Manual Feed (EU/France)	3 - 18
H523 3349	Decal - Manual Feed (Asia)	3 - 18
H523 3351	Manual Feed Table	3 - 17
H523 3352	Bushing - Paper Feed Roller	19 - 26
H523 3353	Sponge - Left Cassette	7 - 14
H523 3354	Sponge - Right Cassette	7 - 15
H523 3355	Rail Left Mylar	19 - 33
H523 3356	Registration Mylar	19 - 34
H523 3411	Cassette Base	31 - 19
H523 3412	Base PlateE	31 - 6
H523 3414	Cover - Bottom Cover	31 - 11
H523 3415	Paper Guide - Front	31 - 8
H523 3416	Paper Guide Rear	31 - 4
H523 3418	Separation Pad Ass'y	31 - 20
H523 3421	Spring - Separation	31 - 33

Parts No.	Description.	Page And Index No.
H523 3422	Paper Feed Roller	31 - 23
H523 3423	Bushing - Paper Feed	31 - 22
H523 3426	Transfer Gear	31 - 25
H523 3427	Bracket - Drive Transfer	31 - 27
H523 3430	Drive Transfer Spring	31 - 28
H523 3432	Papaer Size Detector	31 - 14
H523 3437	Sensor Cover	31 - 18
H523 3438	Paper Tray	31 - 13
H523 3439	Cassette Cover	31 - 2
H523 3440	Upper Cover	31 - 29
H523 3441	Bottom Cover	31 - 12
H523 3443	Mylar - Paper Guide	31 - 31
H523 3444	Pad - Bottom Plate	31 - 7
H523 3451	Decal - Papaer Set	31 - 1
H523 3452	Decal - Paper Size	31 - 5
H523 4020	Upper Rear Cover	5 - 16
H523 4021	Right Upper Cover	5 - 1
H523 4022	TX Motor Cover	5 - 20
H523 4023	Front Cover	3 - 9
H523 4024	Rear Cover	3 - 11
H523 4025	Right Cover	3 - 10
H523 4026	Platen Cover	5 - 9
H523 4027	Hinge - Platen Cover	5 - 8
H523 4030	Front Original Guide	5 - 2
H523 4031	Rear Original Guide	5 - 4
H523 4032	Gear - Original Guide	5 - 11
H523 4033	Spring - Original Guide	5 - 12
H523 4034	Stopper - Platen Cover	5 - 18
H523 4035	Hinge - Platen Cover	5 - 6
H523 4036	Platen Cover Sheet	5 - 14

Parts No.	Description.	Page And Index No.
H523 4037	ADF Stopper	13 - 21
H523 4038	Platen Cover Bracket	5 - 22
H523 4040	Platen Hinge Cover	5 - 5
H523 4041	Spring - Platen Cover Hinge	5 - 7
H523 4042	Bracket - Platen Cover Stopper	5 - 17
H523 4043	Decal - Scale	5 - 15
H523 4045	Decal - Original Guide	5 - 3
H523 4048	Decal - Scanner Release	5 - 13
H523 4049	Decal - Platen Cover (EU/France)	5 - 10
H523 4050	Decal - Platen Cover (Asia)	5 - 10
H523 4064	Platen Cover Ass'y	5 - 26
H523 4065	Platen Cover Ass'y (Asia)	5 - 26
H523 4066	Upper Rear Cover Ass'y	5 - 27
H523 4213	Operation Panel Sheet - Gestetner (Asia)	5 - 28
H523 4214	Operation Panel Sheet - Nashua (Asia)	5 - 28
H523 4512	Operation Panel Ass'y (RIC-Asia)	5 - 23
H523 4531	Operation Panel Ass'y (RIC/NRG/Infotec)	5 - 23
H523 4543	Operation Panel Ass'y (NRG-Asia)	5 - 23
H523 4553	Operation Panel Sheet - Ricoh	5 - 28
H523 4556	Quick Dial Sheet	5 - 24
H523 4557	Quick Dial Sheet Cover	5 - 25
H523 4751	Copy Tray	3 - 2
H523 5000	Contact Image Sensor Ass'y	15 - 2
H523 5001	Stabilizer	15 - 19
H523 5002	Scanner Motor	15 - 13
H523 5003	Photointerruptor	19 - 30
H523 5003	Photointerruptor	11 - 40
H523 5003	Photointerruptor	25 - 12
H523 5010	ADF Motor	11 - 1
H523 5020	Fusing Thermistor	23 - 2

Parts No.	Description.	Page And Index No.
H523 5022	Fusing Harness (Asia)	23 - 10
H523 5024	Fusing Lamp - 230V	23 - 20
H523 5025	Fusing Harness (EU/France)	23 - 10
H523 5035	Ozone Fan Motor	27 - 3
H523 5037	Power Pack	27 - 5
H523 5040	Paper Feed Motor	19 - 20
H523 5050	Magnetic Clutch -	31 - 24
H523 5051	Paper End Sensor	31 - 30
H523 5309	Harness - FCU-Prse2	29 - 19
H523 5311	Speaker Harness (Asia)	5 - 30
H523 5316	Harness - FCU-Prse1	29 - 21
H523 5318	Harness - LDDR	29 - 20
H523 5319	Harness - FCU-LDDR2	17 - 19
H523 5320	Harness - CIS	29 - 15
H523 5320	Lamp Harness	15 - 18
H523 5321	Harness - SCN-SE	11 - 11
H523 5326	Relay Harness Ass'y	31 - 21
H523 5329	Relay Harness	25 - 3
H523 5331	Harness:Heater:Connecting	25 - 25
H523 5331	Fusing Harness	25 - 10
H523 5331	Relay Harness	27 - 28
H523 5336	Interlock Switch	25 - 2
H523 5338	Power Cord Harness	27 - 13
H523 5354	Harness - NCU1	29 - 16
H523 5356	PSU Harness	27 - 6
H523 5358	Harness - NCU2	29 - 26
H523 5362	Harness - Optional Cassette	19 - 5
H523 5364	Harness - Scanner	29 - 17
H523 5373	Harness - FCU-Exit Sensor	25 - 14
H523 5375	Harness - FCU-PRMT	29 - 22

Parts No.	Description.	Page And Index No.
H523 5377	Harness - FCU-MAMT	29 - 23
H523 5379	Harness - Thermistor	29 - 18
H523 5441	PCB - PSU 230V	27 - 7
H523 6140	PCB - FCU - LFO - EUR	29 - 5
H523 8600	Operation Manual - FAX (Ricoh)	34 - 15
H523 8609	Operation Manual - Fax (Ricoh - Asia)	3 - 15
H523 8621	Operation Manual - FAX (NRG)	34 - 15
H523 8629	Operation Manual - Fax (NRG - Asia)	3 - 15
H523 8630	Operation Manual - FAX (Savin)	34 - 15
H523 8659	Operation Manual - PC (Ricoh/NRG - Asia)	3 - 19
H523 8670	Operation Manual - PC (Ricoh/NRG/Savin)	34 - 19
H523 9570	Develpment Unit - Ass'y - LFO	3 - 14