STINGER-C1
(Machine Code: A250)

SERVICE MANUAL

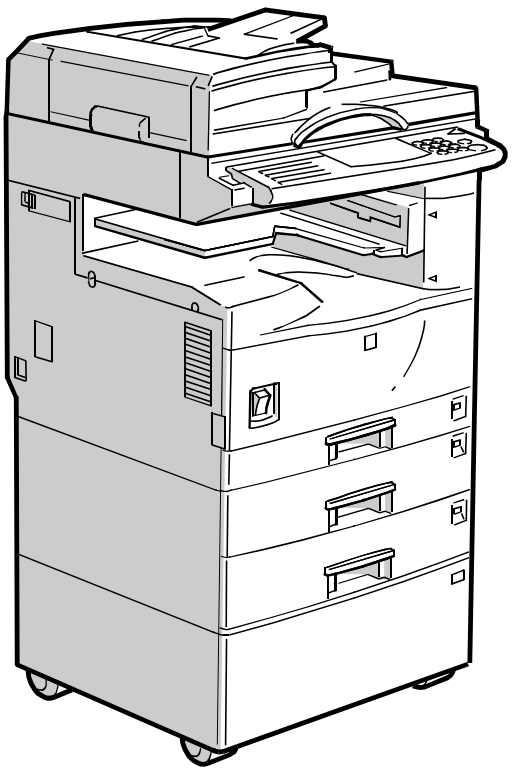

Subject to change
Ricoh Technical Service
May 17th, 1999

⚠IMPORTANT SAFETY NOTICES

PREVENTION OF PHYSICAL INJURY

1. Before disassembling or assembling parts of the copier and peripherals, make sure that the copier power cord is unplugged.
2. The wall outlet should be near the copier and easily accessible.
3. Note that some components of the copier and the paper tray unit are supplied with electrical voltage even if the main power switch is turned off.
4. If any adjustment or operation check has to be made with exterior covers off or open while the main switch is turned on, keep hands away from electrified or mechanically driven components.
5. If the “Start” key is pressed before the copier completes the warm-up period (the “Start” key starts blinking red and green alternatively), keep hands away from the mechanical and the electrical components as the copier starts making copies as soon as the warm-up period is completed.
6. The inside and the metal parts of the fusing unit become extremely hot while the copier is operating. Be careful to avoid touching those components with your bare hands.

HEALTH SAFETY CONDITIONS

1. Always replace the ozone filters with the specified ones at the specified intervals.
2. Toner is non-toxic, but if you get it in your eyes by accident, it may cause temporary eye discomfort. Try to remove with eye drops or flush with water as first aid. If unsuccessful, get medical attention.

OBSERVANCE OF ELECTRICAL SAFETY STANDARDS

1. The copier and its peripherals must be installed and maintained by a customer service representative who has completed the training course on those models.
2. The danger of explosion exists if batteries on the FCU and JBIG are incorrectly replaced. Replace only with the same or an equivalent type recommended by the manufacturer. Discard used batteries in accordance with the manufacturer’s instructions.

SAFETY AND ECOLOGICAL NOTES FOR DISPOSAL

1. Do not incinerate AIO cartridge. Toner dust may ignite suddenly when exposed to and open flame.
2. Dispose of used AIO cartridge in accordance with local regulations. (This is non-toxic supplies.)
3. Dispose of replaced parts in accordance with local regulations.
4. When keeping used lithium batteries in order to dispose of them later, do not put more than 100 batteries per sealed box. Storing larger numbers or not sealing them apart may lead to chemical reactions and heat build-up.

LASER SAFETY

The Center for Devices and Radiological Health (CDRH) prohibits the repair of laser-based optical units in the field. The optical housing unit can only be repaired in a factory or at a location with the requisite equipment. The laser subsystem is replaceable in the field by a qualified Customer Engineer. The laser chassis is not repairable in the field. Customer engineers are therefore directed to return all chassis and laser subsystems to the factory or service depot when replacement of the optical subsystem is required.

⚠WARNING

Use of controls, or adjustment, or performance of procedures other than those specified in this manual may result in hazardous radiation exposure.

⚠WARNING FOR LASER UNIT

WARNING: Turn off the main switch before attempting any of the procedures in the Laser Unit section. Laser beams can seriously damage your eyes.

CAUTION MARKING:





TABLE OF CONTENTS

1. OVERALL MACHINE INFORMATION 1-1
1.1 SPECIFICATIONS 1-1
1.2 MACHINE CONFIGURATION 1-5
1.3 PAPER PATH 1-6
1.4 MECHANICAL COMPONENT LAYOUT 1-7
1.5 ELECTRICAL COMPONENT DESCRIPTIONS 1-8
1.5.1 COPIER ENGINE 1-8
1.6 DRIVE LAYOUT 1-11
1.7 COPY PROCESS 1-12
1.7.1 OVERVIEW 1-12
1.8 BOARD STRUCTURE 1-14
1.8.1 OVERVIEW 1-14
1.8.2 DESCRIPTION 1-15

2. DETAILED SECTION DESCRIPTIONS 2-1
2.1 SCANNING 2-1
2.1.1 OVERVIEW 2-1
2.1.2 SCANNER DRIVE 2-2
2.1.3 ORIGINAL SIZE DETECTION IN PLATEN MODE 2-3
2.2 IMAGE PROCESSING 2-5
2.2.1 OVERVIEW 2-5
2.2.2 SBU (SENSOR BOARD UNIT) 2-7
2.2.3 AUTO IMAGE DENSITY (ADS) 2-8
2.2.4 IMAGE PROCESSING UNIT (IPU) 2-9
2.2.5 MEMORY CONTROLLER AND EXTENDED MEMORY BOARD (EMB) 2-20
2.2.6 VIDEO CONTROL UNIT (VCU) 2-21
2.2.7 IMAGE PROCESSING SUMMARY 2-23
2.3 LASER EXPOSURE 2-33
2.3.1 OVERVIEW 2-33
2.3.2 OPTICAL PATH 2-34
2.3.3 AUTO POWER CONTROL (APC) 2-35
2.3.4 LD SAFETY SWITCH 2-36
2.4 ALL-IN-ONE CARTRIDGE (AIO CARTRIDGE) 2-37
2.4.1 OVERVIEW 2-37
2.4.2 DRIVE 2-38
2.4.3 DRUM CHARGE 2-39
2.4.4 DEVELOPMENT 2-40
2.4.5 DRUM CLEANING 2-43
2.5 IMAGE TRANSFER AND PAPER SEPARATION 2-44
2.5.1 OVERVIEW 2-44
2.5.2 TRANSFER CURRENT SETTINGS 2-45
2.5.3 TRANSFER ROLLER CLEANING 2-46
2.6 PAPER FEED 2-47

2.6.1 OVERVIEW 2-47
2.6.2 BUILT-IN TRAY 2-48
2.6.3 BY-PASS TRAY 2-51
2.6.4 PAPER REGISTRATION 2-53
2.6.5 MISFEED DETECTION 2-54
2.7 IMAGE FUSING 2-57
2.7.1 OVERVIEW 2-57
2.7.2 FUSING UNIT DRIVE 2-58
2.7.3 PRESSURE ROLLER/PAPER EXIT 2-59
2.7.4 FUSING UNIT DRIVE RELEASE 2-59
2.7.5 FUSING TEMPERATURE CONTROL 2-60
2.7.6 OVERHEAT PROTECTION 2-63
2.7.7 ENERGY SAVER MODE 2-63

3. INSTALLATION 3-1
3.1 INSTALLATION REQUIREMENTS 3-1
3.1.1 ENVIRONMENT 3-1
3.1.2 MACHINE LEVEL 3-2
3.1.3 MINIMUM SPACE REQUIREMENTS 3-3
3.1.4 POWER REQUIREMENTS 3-4
3.2 COPIER INSTALLATION 3-5
3.2.1 ACCESSORY CHECK 3-5
3.2.2 COPIER INSTALLATION PROCEDURE 3-6
3.3 ADF INSTALLATION 3-10
3.3.1 ACCESSORY CHECK 3-10
3.3.2 ADF INSTALLATION PROCEDURE 3-11
3.4 PAPER TRAY UNIT (1 TRAY) INSTALLATION 3-14
3.4.1 ACCESSORY CHECK 3-14
3.4.2 PAPER TRAY UNIT INSTALLATION PROCEDURE 3-15
3.5 PAPER TRAY UNIT (2 TRAYS) INSTALLATION 3-18
3.5.1 ACCESSORY CHECK 3-18
3.5.2 PAPER TRAY UNIT INSTALLATION PROCEDURE 3-19
3.6 1-BIN SORTER INSTALLATION 3-23
3.6.1 ACCESSORY CHECK 3-23
3.6.2 1-BIN SORTER INSTALLATION PROCEDURE 3-24
3.7 PLATEN COVER INSTALLATION 3-29
3.7.1 ACCESSORY CHECK 3-29
3.7.2 PLATEN COVER INSTALLATION PROCEDURE 3-29
3.8 EXTENDED MEMORY BOARD INSTALLATION 3-30
3.8.1 ACCESSORY CHECK 3-30
3.8.2 EXTENDED MEMORY BOARD INSTALLATION PROCEDURE 3-31
3.9 DRUM HEATER INSTALLATION (OPTION) 3-32
3.10 OPTICS ANTI-CONDENSATION HEATER INSTALLATION (OPTION) 3-33
3.11 TRAY HEATER INSTALLATION 3-34

4. SERVICE TABLES 4-1
4.1 GENERAL CAUTION 4-1
4.1.1 AIO CARTRIDGE (ALL-IN-ONE CARTRIDGE) 4-1
4.1.2 TRANSFER ROLLER UNIT 4-1
4.1.3 SCANNER UNIT 4-1
4.1.4 LASER UNIT 4-2
4.1.5 FUSING UNIT 4-2
4.1.6 PAPER FEED 4-2
4.1.7 OTHERS 4-2
4.2 SERVICE PROGRAM MODE 4-3
4.2.1 SERVICE PROGRAM MODE OPERATION 4-3
4.1.2 SERVICE PROGRAM MODE TABLES 4-4
4.1.3 TEST PATTERN PRINTING (SP5-902) 4-38
4.1.4 INPUT CHECK (SP5-803) 4-39
4.1.5 OUTPUT CHECK (SP5-804) 4-44
4.1.6 COPY JAM HISTORY DISPLAY (SP7-903) 4-46
4.1.7 ORIGINAL JAM HISTORY DISPLAY (SP7-905) 4-47
4.1.8 SYSTEM PARAMETER AND DATA LISTS (SP5-992) 4-48
4.1.9 MEMORY ALL CLEAR (SP5-801) 4-49
4.1.10 PROGRAM UPLOAD/DOWNLOAD 4-50
4.1.11 NVRAM DATA DOWNLOAD 4-53
4.1.12 APS AND PLATEN/DF COVER SENSOR OUTPUT DISPLAY (SP4-301) 4-55
4.1.13 DF APS SENSOR OUTPUT DISPLAY (SP6-901) 4-56
4.1.14 DISPLAY LANGUAGE (SP5-808) 4-57
4.1.15 SERIAL NUMBER INPUT (SP5-811) 4-57
4.3 USER TOOLS 4-58
4.1.1 HOW TO ENTER AND EXIT USER TOOLS 4-58
4.1.2 USER TOOLS TABLE 4-58
4.4 LEDS 4-60
4.5 SPECIAL TOOLS AND LUBRICANTS 4-60
4.5.1 SPECIAL TOOLS 4-60
4.5.2 LUBRICANTS 4-60

5. PREVENTIVE MAINTENANCE SCHEDULE 5-1
5.1 PM TABLE 5-1
5.2 HOW TO CLEAR THE MAINTENANCE COUNTER 5-2

6. REPLACEMENT AND ADJUSTMENT 6-1
6.1 EXTERIOR REMOVAL 6-1
6.1.1 REAR COVER 6-1
6.1.2 COPY TRAY 6-1
6.1.3 LEFT COVER 6-1
6.1.4 FRONT COVER 6-2
6.1.5 UPPER RIGHT COVER 6-3
6.1.6 LOWER RIGHT COVER 6-3
6.1.7 RIGHT SMALL COVER 6-3
6.1.8 OPERATION PANEL 6-4

6.2 SCANNER 6-5
6.2.1 EXPOSURE GLASS REMOVAL 6-5
6.2.2 LENS BLOCK REMOVAL 6-7
6.2.3 EXPOSURE LAMP REPLACEMENT 6-8
6.2.4 1ST SCANNER ALIGNMENT ADJUSTMENT 6-9
6.2.5 2ND SCANNER POSITION ADJUSTMENT 6-10
6.3 LASER UNIT 6-11
6.3.1 CAUTION DECAL LOCATIONS 6-11
6.3.2 LASER UNIT/TONER SHIELD GLASS REMOVAL 6-12
6.3.3 LD UNIT/LASER SYNCHRONIZATION DETECTOR REMOVAL 6-13
6.3.4 EXIT TRAY PAPER SENSOR REMOVAL 6-13
6.3.5 POLYGONAL MIRROR MOTOR REMOVAL 6-14
6.3.6 LASER UNIT ALIGNMENT ADJUSTMENT 6-15
6.4 IMAGE TRANSFER 6-16
6.4.1 TRANSFER ROLLER REMOVAL 6-16
6.5 FUSING 6-17
6.5.1 FUSING UNIT REMOVAL 6-17
6.5.2 HOT ROLLER, FUSING LAMP AND THERMOFUSE REPLACEMENT 6-18
6.5.3 PRESSURE ROLLER REPLACEMENT 6-20
6.5.4 FUSING THERMISTOR REPLACEMENT 6-21
6.5.5 HOT ROLLER STRIPPER PAWL REPLACEMENT 6-22
6.6 PAPER FEED 6-23
6.6.1 PAPER FEED ROLLER REPLACEMENT 6-23
6.6.2 FRICTION PAD REPLACEMENT 6-24
6.6.3 STANDARD TRAY PAPER FEED CLUTCH REPLACEMENT 6-25
6.6.4 VERTICAL TRANSPORT ROLLER/SENSOR/ CLUTCH REPLACEMENT 6-26
6.6.5 BY-PASS FEED ROLLER REPLACEMENT 6-27
6.6.6 BY-PASS FEED FRICTION PAD REPLACEMENT 6-28
6.6.7 BY-PASS FEED SENSOR REPLACEMENT 6-29
6.6.8 BY-PASS TRAY REMOVAL 6-30
6.6.9 BY-PASS FEED PAPER WIDTH SENSOR REMOVAL 6-31
6.6.10 REGISTRATION ROLLER REMOVAL 6-32
6.6.11 REGISTRATION SENSOR REPLACEMENT 6-33
6.6.12 TONER END SENSOR REPLACEMENT 6-34
6.7 OTHERS 6-35
6.7.1 MAIN MOTOR/GEAR BOX REPLACEMENT 6-35
6.7.2 IOB (INPUT OUTPUT BOARD) REPLACEMENT 6-36
6.7.3 BICU (BASE-ENGINE IMAGE CONTROL UNIT) REPLACEMENT 6-37
6.7.4 POWER SUPPLY UNIT AND B/C/T POWER PACK REPLACEMENT 6-38
6.8 STANDARD WHITE DENSITY ADJUSTMENT 6-39
6.9 COPY ADJUSTMENT PRINTING/SCANNING 6-40
6.9.1 PRINTING 6-40
6.9.2 SCANNING 6-42
6.9.3 ADF IMAGE ADJUSTMENT 6-44

7. TROUBLESHOOTING..... 7-1
7.1 SERVICE CALL CONDITIONS..... 7-1
7.1.1 SUMMARY..... 7-1
7.1.2 SC CODE DESCRIPTIONS..... 7-2
7.2 BLOWN FUSE TABLE..... 7-10
7.3 ELECTRICAL COMPONENT DEFECTS..... 7-10
7.3.1 SWITCHES..... 7-10
7.3.2 SENSORS..... 7-11

OPTIONS

DOCUMENT FEEDER (A859)

1. OVERALL INFORMATION.....A859-1
1.1 SPECIFICATIONS..... A859-1
1.2 MECHANICAL COMPONENT LAYOUT..... A859-2
1.3 ELECTRICAL COMPONENT LAYOUT..... A859-3
1.4 ELECTRICAL COMPONENT DESCRIPTION..... A859-4
1.5 DRIVE LAYOUT..... A859-5

2. DETAILED SECTION DESCRIPTIONS.....A859-6
2.1 ORIGINAL SIZE DETECTION..... A859-6
1.2 PICK-UP AND SEPARATION..... A859-8
1.3 ORIGINAL TRANSPORT AND EXIT MECHANISM..... A859-9
1.4 STAMP..... A859-10
1.5 TIMING CHARTS..... A859-11
1.5.1 A4 SIDEWAYS..... A859-11
1.5.2 A4 SIDEWAYS, STAMP MODE..... A859-12
1.6 JAM DETECTION..... A859-13
1.7 OVERALL ELECTRICAL CIRCUIT..... A859-14

3. REPLACEMENT AND ADJUSTMENT.....A859-15
3.1 FEED UNIT REMOVAL..... A859-15
3.2 SEPARATION ROLLER REPLACEMENT..... A859-15
3.3 PICK-UP ROLLER REPLACEMENT..... A859-16
3.4 FEED BELT REPLACEMENT..... A859-16
3.5 ORIGINAL SET SENSOR REPLACEMENT..... A859-17
3.6 ORIGINAL WIDTH/LENGTH/TRAILING EDGE SENSOR REPLACEMENT..... A859-18
3.7 ORIGINAL EXIT TRAY/FRONT COVER/REAR COVER REMOVAL..... A859-19
3.8 FEED COVER OPEN SENSOR/DF OPEN SENSOR REPLACEMENT..... A859-19
3.9 FEED CLUTCH/PICK-UP SOL/TRANSPORT MOTOR REPLACEMENT..... A859-20
3.10 DF FEED COVER REMOVAL..... A859-21
3.11 REGISTRATION SENSOR REPLACEMENT..... A859-21
3.12 STAMP SOLENOID REPLACEMENT..... A859-22

PAPER TRAY UNIT (A860)

1. OVERALL MACHINE INFORMATION A860-1
- 1.1 SPECIFICATIONS A860-1
- 1.2 MECHANICAL COMPONENT LAYOUT A860-2
- 1.3 ELECTRICAL COMPONENT LAYOUT A860-3
- 1.4 ELECTRICAL COMPONENT DESCRIPTION A860-4
- 1.5 DRIVE LAYOUT A860-5

2. DETAILED DESCRIPTIONS A860-6
- 2.1 PAPER FEED AND SEPARATION MECHANISM A860-6
- 2.2 PAPER LIFT MECHANISM A860-7
- 2.3 PAPER END DETECTION A860-9
- 2.4 PAPER HEIGHT DETECTION A860-10
- 1.5 PAPER SIZE DETECTION A860-12
- 1.6 SIDE AND END FENCES A860-13

3. REPLACEMENT AND ADJUSTMENT A860-14
- 3.1 FEED ROLLER REPLACEMENT A860-14
- 3.2 TRAY MAIN BOARD REPLACEMENT A860-15
- 3.3 TRAY MOTOR REPLACEMENT A860-15
- 3.4 RELAY CLUTCH REPLACEMENT A860-16
- 3.5 UPPER PAPER FEED CLUTCH REPLACEMENT A860-17
- 3.6 LOWER PAPER FEED CLUTCH REPLACEMENT A860-18
- 3.7 LIFT MOTOR REPLACEMENT A860-19
- 3.8 PAPER END SENSOR REPLACEMENT A860-20
- 3.9 VERTICAL TRANSPORT SENSOR REPLACEMENT A860-20
- 3.10 PAPER SIZE SWITCH REPLACEMENT A860-21

PAPER TRAY UNIT (A861)

1. OVERALL MACHINE INFORMATION A861-1
- 1.1 SPECIFICATIONS A861-1
- 1.2 MECHANICAL COMPONENT LAYOUT A861-2
- 1.3 ELECTRICAL COMPONENT LAYOUT A861-3
- 1.4 ELECTRICAL COMPONENT DESCRIPTION A861-4
- 1.5 DRIVE LAYOUT A861-5

2. DETAILED DESCRIPTIONS A861-6
- 2.1 PAPER FEED AND SEPARATION A861-6
- 2.2 PAPER LIFT MECHANISM A861-7
- 2.3 PAPER END DETECTION A861-9
- 2.4 PAPER HEIGHT DETECTION A861-10
- 2.5 PAPER SIZE DETECTION A861-12
- 2.6 SIDE AND END FENCES A861-13

3. REPLACEMENT AND ADJUSTMENT.....A861-14
3.1 FEED ROLLER REPLACEMENT A861-14
3.2 TRAY MAIN BOARD REPLACEMENT..... A861-15
3.3 TRAY MOTOR REPLACEMENT A861-15
3.4 TRAY MOTOR REPLACEMENT A861-16
3.5 LIFT MOTOR REPLACEMENT A861-17
3.6 PAPER END SENSOR REPLACEMENT A861-18
3.7 PAPER SIZE SWITCH REPLACEMENT..... A861-18

1-BIN SORTER (A869)

1. OVERALL INFORMATION.....A869-1
1.1 SPECIFICATIONS..... A869-1
1.2 MECHANICAL COMPONENT LAYOUT..... A869-2
1.3 ELECTRICAL COMPONENT LAYOUT A869-3
1.4 ELECTRICAL COMPONENT DESCRIPTION..... A869-4

2. DETAILED SECTION DESCRIPTIONS.....A869-5
2.1 BASIC OPERATION..... A869-5

3. REPLACEMENT AND ADJUSTMENT.....A869-6
3.1.1 TOP COVER REMOVAL A869-6
3.1.2 TRAY OPEN SWITCH REPLACEMENT A869-6
3.1.3 PAPER SENSOR AND EXIT SENSOR REPLACEMENT A869-6

1. OVERALL MACHINE INFORMATION

1.1 SPECIFICATIONS

Configuration: Desktop

Copy Process: Dry electrostatic transfer system

Originals: Sheet/Book

Original Size: Maximum A3/11" x 17"

Copy Paper Size: Maximum
A3/11" x 17"
Minimum
A5/8 1/2" x 5 1/2" sideways (Paper tray)
B6 lengthwise/5 1/2" x 8 1/2" (By-pass)
Custom sizes in the by-pass tray:
Width: 90 ~ 305 mm (3.5" ~ 12.0")
Length: 148 ~ 1,260 mm (5.8" ~ 49.6")

Copy Paper Weight: Paper Tray:
60 ~ 90 g/m^2, 16 ~ 24 lb
By-pass:
60 ~ 162 g/m^2, 16 ~ 43 lb

Reproduction Ratios: 3 Enlargement and 3 Reduction

	A4/A3 Version	LT/DLT Version
Enlargement	200% 141% 122%	155% 129% 121%
Full Size	100%	100%
Reduction	93% 71% 50%	93% 78% 65%

Zoom: 50% to 200% in 1% steps

Power Source: 120 V, 60 Hz:
More than 10 A (for North America)
220 ~ 240 V, 50/60 Hz
More than 6 A (for Europe/Asia)
110 V, 50/60 Hz
More than 11 A (for Taiwan)

Power Consumption:

	Mainframe Only		Full System	
	120 V	**220 ~ 240 V**	**120 V**	**220 ~ 240 V**
Maximum	Less than 1.1 kW	Less than 1.1 kW	Less than 1.2 kW	Less than 1.3 kW
Copying	Approx. 450 W	Approx. 450 W	Approx. 460 W	Approx. 460 W
Warm-up	Approx. 860 W	Approx. 760 W	Approx. 870 W	Approx. 770 W
Stand-by	Approx. 110 W	Approx. 110 W	Approx. 130 W	Approx. 130 W
Energy Saver Level 1	Approx. 60 W	Approx. 60 W	Approx. 60 W	Approx. 60 W
Energy Saver Level 2	Approx. 30 W	Approx. 30 W	Approx. 30 W	Approx. 30 W
Auto Shut off	0 W	0 W	0 W	0 W

NOTE: 1) Full system: Mainframe + ADF + 1-bin Sorter + Paper Tray Unit
2) Without the optional heaters, fax unit, and printer controller

Noise Emission (Sound Power Level):

Stand-by (Mainframe only): US/Asia Model: 42 dB(A)
Europe Model: 30 dB(A)

Operating (Mainframe only): US/Asia Model: 60 dB(A)
Europe Model: 66 dB(A)

Operating (Full System): 66 dB(A)

Off Mode: 30 dB(A)

NOTE: 1) The above measurements were made in accordance with ISO 7779.
2) Full System: Mainframe + ADF + 1-bin Sorter + Paper Tray Unit

Dimensions (W x D x H): 550 x 575 x 460 mm (21.7" x 22.7" x 18.2")
NOTE: Measurement Conditions
1) With by-pass feed table closed
2) Without the ADF

Weight: Less than 35 kg (78 lb)
Not including ADF, Platen Cover, and AIO

Copying Speed in Multicopy mode (copies/minute):

	A4 sideways/ 11" x 8 1/2"	A3/11" x 17"	B4/8 1/2" x 14"
Non-memory copy mode	15	10	11
Memory copy mode	18	10	12

NOTE: Measurement Conditions
1) Not APS mode
2) A4/LT copying
3) Full size

Warm-up Time: Less than 30 seconds (20°C, 68°F): 115 V machine
Less than 40 seconds (20°C, 68°F): 230 V machine

First Copy Time: Less than 6.5 seconds
NOTE: Measurement Conditions
1) When polygonal mirror motor is spinning.
2) Not APS mode
3) A4/LT copying
4) Full size

Copy Number Input: Ten-key pad, 1 to 99 (count up or count down)

Manual Image Density: 7 steps

Automatic Reset: 60 seconds is the standard setting; it can be changed with a User Tool.

Automatic Shut Off: 15 minutes is the standard setting; it can be changed with a User Tool.

Copy Paper Capacity: Paper Tray:
250 sheets
Optional Paper Tray Unit:
500 sheets x 1, or 500 sheets x 2
By-pass Tray:
100 sheets (A4, B5, A5, B6, 8 1/2" x 11", 5 1/2" x 8 1/2")
10 sheets (A3, B4, 11" x 17", 8 1/2" x 13")
1 sheets (non-standard sizes)
NOTE: Copy weight: 80g/m^2 (20 lb).

Toner Replenishment: All-in-one toner cassette cartridge (750 g/cartridge)

Toner Yield: 12 k copies (A4 sideways, 6% full black, 1 to 1 copying, ADS mode)

Optional Equipment:

- Platen cover
- Auto document feeder
- Paper tray unit (1 tray)
- Paper tray unit (2 trays)
- 1-bin sorter
- Tray heater
- Optics anti-condensation heater
- Drum heater
- Copier feature expander (48 MB memory)

Copy Capacity: Copy Tray: 250 sheets (without 1-bin sorter),
125 sheets (with 1-bin sorter)
1-bin Sorter: 125 sheets

Memory Capacity:

		Standard (16 MB)	Optional (+48 MB)
Sort, Rotate Sort	A4, 8 1/2" x 11"	❍	❍
	B4, 8 1/2" x 14"	❍	❍
	A3, 11" x 17"	❍	❍
Number of pages	A4 6%	80 sheets	99 sheets
	A4 ITU-T#4 12%	35 sheets	99 sheets

❍: Available

NOTE: The paper sizes that can be used with Rotate Sort are A4/8 1/2" x 11" and B5 only.

1.2 MACHINE CONFIGURATION

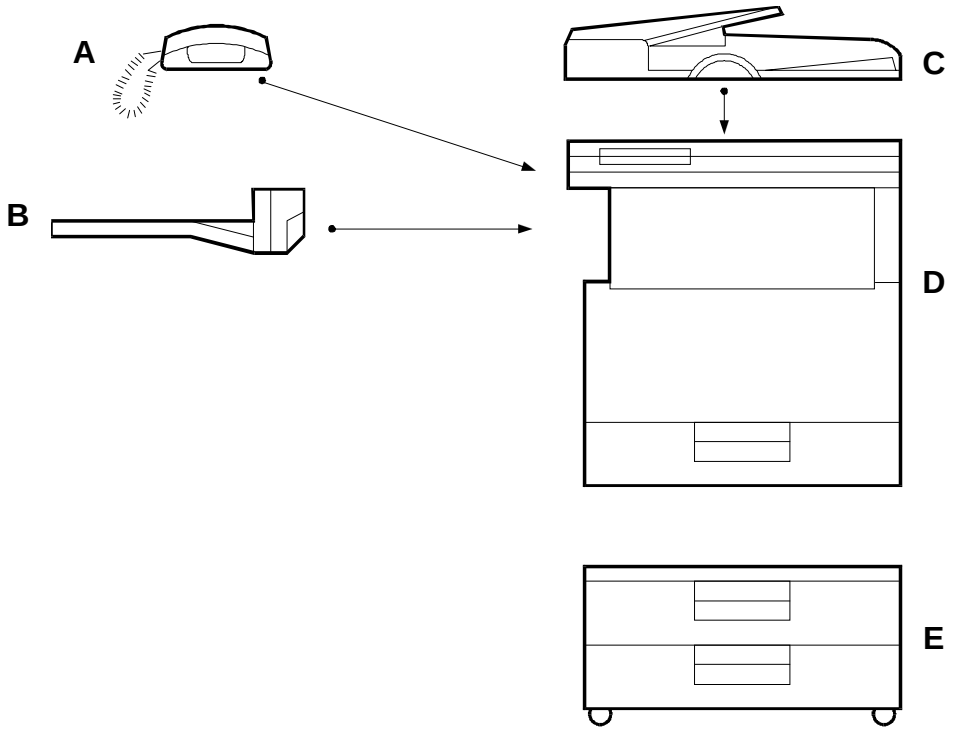

A250V501.WMF

Version	Item	Machine Code	No.
Copier	Copier	A250	D
	ADF (Optional)	A859	C
	Platen Cover (Optional)	A893	
	Paper Tray Unit - 1 tray (Optional)	A861	
	Paper Tray Unit - 2 trays (Optional)	A860	E
	1-bin Sorter (Optional)	A869	B
	Memory 48 MB (Optional)	A887	
Fax	Fax Controller (Optional)	A891	
	Telephone (Optional)	H160	A
	ISDN (Optional)	A890	
	PC Fax Expander (Optional)	A894	
	Fax Function Expander (Optional)	A892	
	Printer Controller (Optional)	B305	
	PS Option (Optional)	B308	
	HDD (Optional)	G690	
	NIB (Optional)	B307	
	Memory 32 or 64 MB (Optional)	G688	

1.3 PAPER PATH

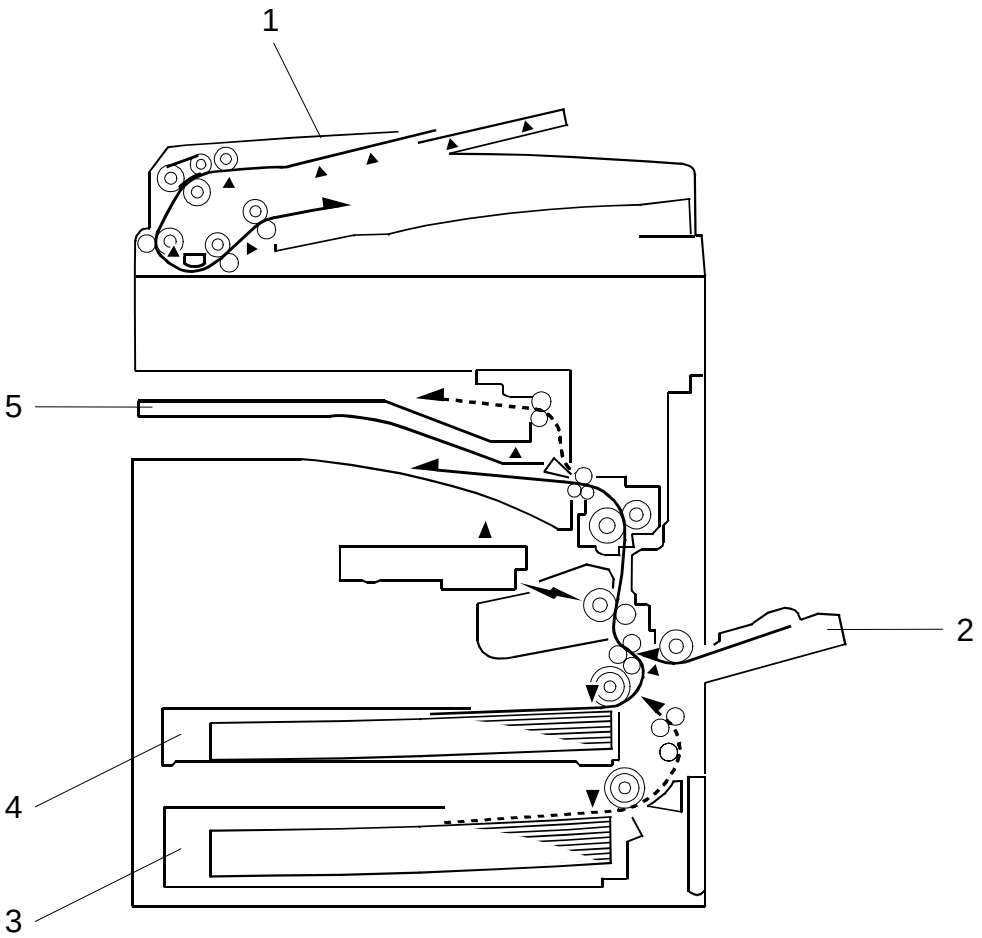

A250V000.WMF

1. Optional ADF
2. By-pass feed tray
3. Optional paper tray (1 tray)
4. Paper tray
5. Optional 1-bin sorter

1.4 MECHANICAL COMPONENT LAYOUT

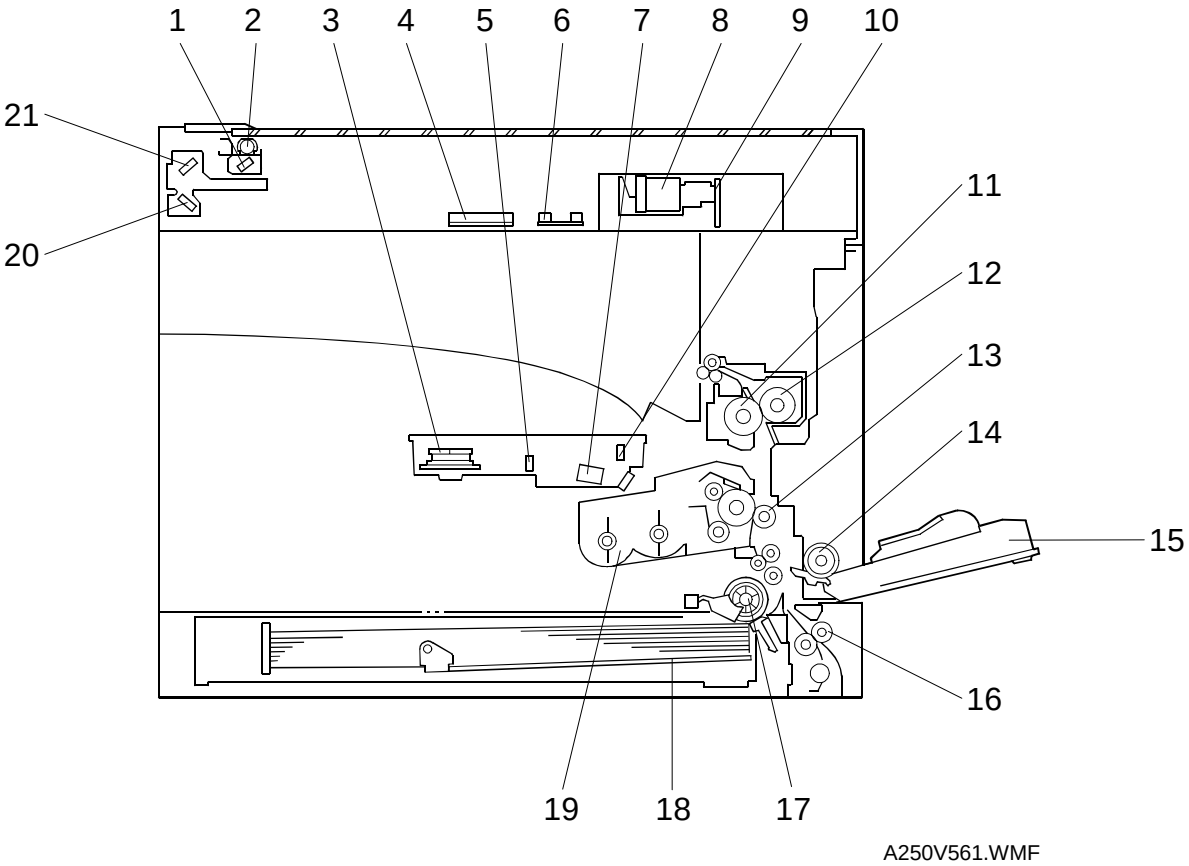

1. 1st mirror (scanner)
2. Exposure lamp
3. Polygonal mirror motor
4. Original width sensor
5. 1st mirror (laser unit)
6. Original length sensor
7. Barrel toroidal lens (BTL)
8. Lens
9. SBU board
10. F-theta mirror
11. Hot roller
12. Pressure roller
13. Transfer roller
14. By-pass feed roller
15. By-pass table
16. Vertical transport roller
17. Paper feed roller
18. Bottom plate
19. All-in-one cartridge (AIO cartridge)
20. 3rd mirror
21. 2nd mirror

1.5 ELECTRICAL COMPONENT DESCRIPTIONS

Refer to the electrical component layout on the reverse side of the point-to-point diagram for the location of the components, using the symbols and index numbers.

1.5.1 COPIER ENGINE

Symbol	Name	Function	Index No.
Motors			
M1	Scanner	Drives the 1st and 2nd scanners.	4
M2	Polygonal Mirror	Turns the polygonal mirror.	28
M3	Main	Drives the main unit components.	12
M4	Exhaust Fan	Removes heat from around the fusing unit.	46
Magnetic Clutches			
MC1	Paper Feed	Starts paper feed from the tray.	14
MC2	By-pass Feed	Starts paper feed from the by-pass table.	15
MC3	Vertical Transport	Drives the vertical transport rollers.	18
MC4	Registration	Drives the registration rollers.	13
Switches			
SW1	Main	Provides power to the machine. If this is off, there is no power supplied to the machine.	40
SW2	Right Door Switch 1	Cuts the +5 V LD dc power line.	30
SW3	Right Door Switch 2	Detects if the front door is open or not, and cuts the +24 V dc power line for the main motor and power pack.	31
SW4	Vertical Transport Cover Switch	Detects if the front door is open or not, and cuts the +24 V dc power line for the vertical transport clutch.	25
SW5	Paper Size	Detects paper size.	24
Sensors			
S1	Scanner HP	Informs the CPU when the 1st and 2nd scanners are at home position.	3
S2	Original Width	Detects original width. This is one of the APS (Auto Paper Select) sensors.	37
S3	Original Length 1	Detects original length. This is one of the APS (Auto Paper Select) sensors.	6
S4	Original Length 2	Detects original length. This is one of the APS (Auto Paper Select) sensors.	6
S5	Toner Near-End	Detects toner near-end.	21
S6	Paper End	Informs the CPU when the tray runs out of paper.	23
S7	Paper Near-End	Informs the CPU when the paper in the tray is almost finished. The printer controller uses this sensor.	19

Symbol	Name	Function	Index No.
S8	By-pass Tray Paper	Informs the CPU that there is paper in the by-pass feed table.	16
S9	By-pass Paper Size	Detects the paper size in the by-pass tray.	20
S10	Vertical Transport	Detects misfeeds.	22
S11	Registration	Detects misfeeds and controls registration clutch off-on timing.	17
S12	Fusing Exit	Detects misfeeds.	35
S13	Exit Tray Paper	Detects if there is paper on the exit tray or not.	27
S14	Platen Cover	Informs the CPU that the platen cover is in the up or down position (related to the APS/ARE functions).	5
S15	AIO Set	Informs the CPU that an AIO is installed.	33
PCBs			
PCB1	BICU	Controls all base engine functions both directly and through other control boards.	44
PCB2	PSU	Provides dc power to the system and ac power to the fusing lamp and heaters.	39
PCB3	IOB	Controls the fusing lamp and the mechanical parts of the machine.	45
PCB4	SBU	Contains the CCD, and outputs a video signal to the BICU board.	8
PCB5	Lamp Stabilizer	Stabilizes the power to the exposure lamp.	7
PCB6	LD Unit	Controls the laser diode.	26
PCB7	Operation Panel	Controls the operation panel.	36
PCB8	Memory (Option)	Expands memory capacity.	—
PCB9	Printer Controller (Option)	Receives print data from a PC.	42
PCB10	FCU (Option)	Controls all fax communications and fax features, in cooperation with the BICU.	43
PCB11	NCU (Option)	Switches the analog line between the fax unit and the external telephone.	47
Lamps			
L1	Exposure Lamp	Applies high intensity light to the original for exposure.	2
L2	Fusing Lamp	Heats the hot roller.	10
Heaters			
H1	Anti-condensation (Option)	Turns on when the main switch is off to prevent moisture from forming on the optics.	1
H2	Drum (Option)	Turns on when the main switch is off to prevent moisture from forming around the drum.	—

Symbol	Name	Function	Index No.
Others			
TF1	Fusing Thermofuse	Opens the fusing lamp circuit if the fusing unit overheats.	9
TH1	Fusing Thermistor	Detects the temperature of the hot roller.	11
PP1	C/B/T Power Pack	Provides high voltage for the charge, development and transfer rollers.	38
LSD 1	Laser Synchronization Detector	Detects the laser beam at the start of the main scan.	29
CO1	Total Counter	Keeps track of the total number of prints made.	48
CO2	Key Counter (Option)	Used for control of authorized use. If this feature is enabled for coping, coping will be impossible until it is installed.	—
LED1	Exit Tray	Indicates if there is paper on the exit tray.	32
LED2	1-bin Sorter	Indicates if there is paper on the 1-bin sorter. 1-bin sorter is option.	34
SP1	Speaker	Turns on during fax communication.	41

1.6 DRIVE LAYOUT

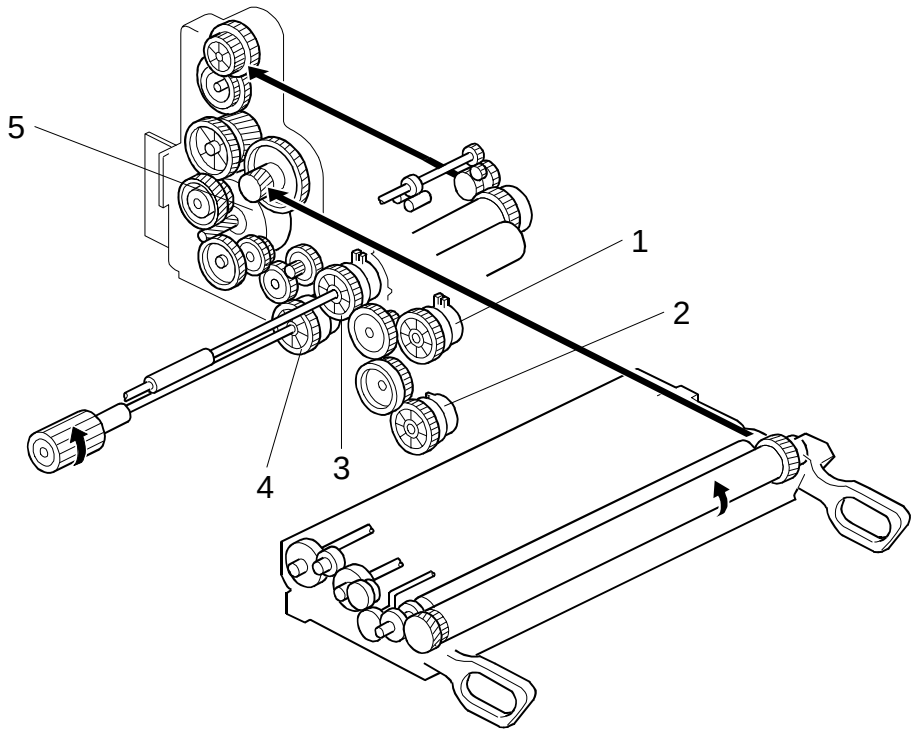

A250V109.WMF

1. By-pass feed clutch
2. Vertical transport clutch
3. Registration clutch
4. Paper feed clutch
5. Main motor

1.7 COPY PROCESS

1.7.1 OVERVIEW

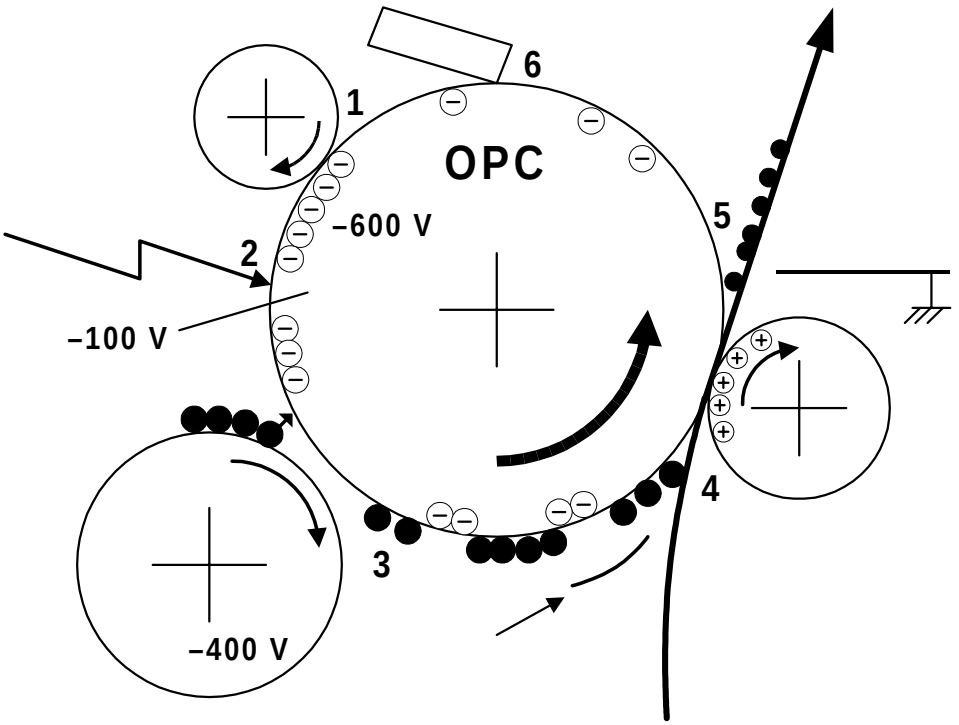

A250V507.WMF

1. DRUM CHARGE

In the dark, the charge roller gives a negative charge of –600 volts to the organic photo-conductive (OPC) drum. The charge remains on the surface of the drum because the OPC layer has a high electrical resistance in the dark.

2. LASER EXPOSURE

The processed data scanned from the original is retrieved from the memory and transferred to the drum by a laser beam, which forms an electrical latent image on the drum surface. The amount of charge remaining as a latent image on the drum depends on the laser beam intensity to about –100 volts, which is controlled by the BICU board.

3. DEVELOPMENT

The development roller charges the toner with a negative bias of –400 volts. Toner particles jump across to the drum and electrostatically attach to the areas of the drum surface where the laser reduced the negative charge on the drum.

4. IMAGE TRANSFER

Paper is fed to the area between the drum surface and the transfer roller at the proper time for aligning the copy paper and the developed image on the drum surface. Then, the transfer roller applies a high positive charge to the reverse side of the paper. This positive charge pulls the toner particles from the drum surface onto the paper. At the same time, the paper is electrostatically attracted to the transfer roller.

5. PAPER SEPARATION

Paper separates from the drum as a result of the electrostatic attraction between the paper and the transfer roller. The discharge plate helps separate the paper from the drum.

6. CLEANING

The cleaning blade removes any toner remaining on the drum surface after the image transfers to the paper.

7. QUENCHING

There is no quenching lamp. The power supply board applies 1.6 kVp-p (1.05 mA) 1 kHz AC to the charge roller. This current removes any remaining voltage on the drum surface.

1.8 BOARD STRUCTURE

1.8.1 OVERVIEW

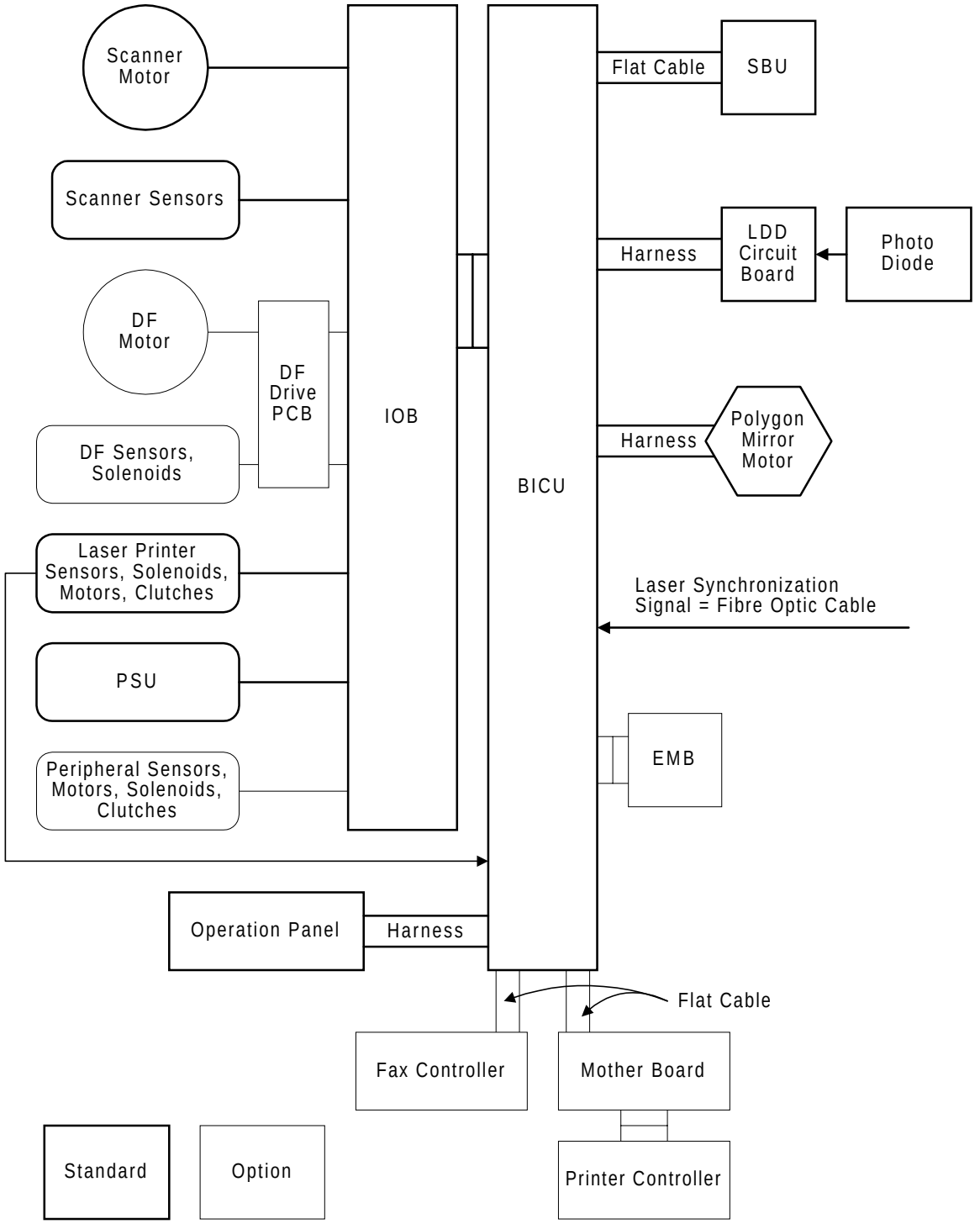

A250V504.WMF

1.8.2 DESCRIPTION

1. BICU (Base Engine and Image Control Unit)

The main board controls the following functions:

- Engine sequence
- Scanner, laser printer engine
- Timing control for peripherals
- Image processing, video control
- Operation control
- Various application boards (fax, printer)
- Machine control, system control

2. IOB (I/O Board)

The IOB handles the following functions:

- Drive control for the sensors, motors, and solenoids of the printer and scanner
- High voltage control board control
- Serial interfaces with peripherals
- Fusing control

3. SBU (Sensor Board Unit)

The SBU deals with the analog signals from the CCD and converts them into digital signals.

4. EMB (Extended Memory Board) (Option)

The EMB stores the image data. An extra 48 MB of memory can be added. This increases the number of pages that can be stored.

2. DETAILED SECTION DESCRIPTIONS

2.1 SCANNING

2.1.1 OVERVIEW

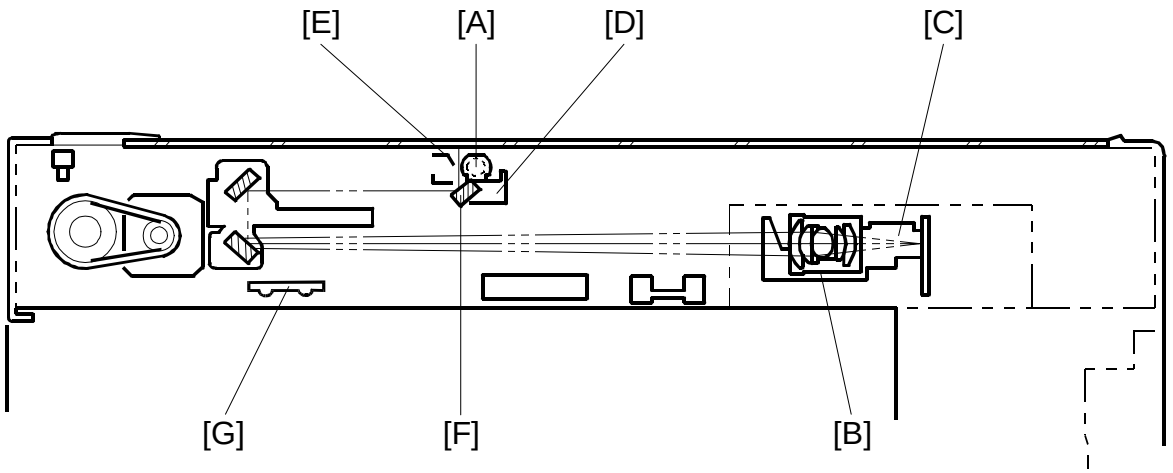

A250D003.WMF

An exposure lamp [A], a xenon lamp in this model, illuminates the original. The 1st, 2nd, 3rd mirrors, and lens [B] reflect the image onto the CCD (charge coupled device) [C]. The SBU (Sensor Board Unit) consists of the CCD and the lens.

The 1st scanner [D] consists of the exposure lamp, a reflector [E], and the 1st mirror [F].

The exposure lamp is energized by a DC supply to avoid uneven light intensity as the 1st scanner moves in the sub-scan direction. The entire exposure lamp surface is frosted to ensure even exposure in the main scan direction.

The light reflected by the reflector is of almost equal intensity to the light from the exposure lamp, to reduce shadows on pasted originals.

An optics anti-condensation heater [G] is available as an option. It can be installed on the left side of the scanner unit. It turns on whenever the power cord is plugged in and the machine is in off condition.

2.1.2 SCANNER DRIVE

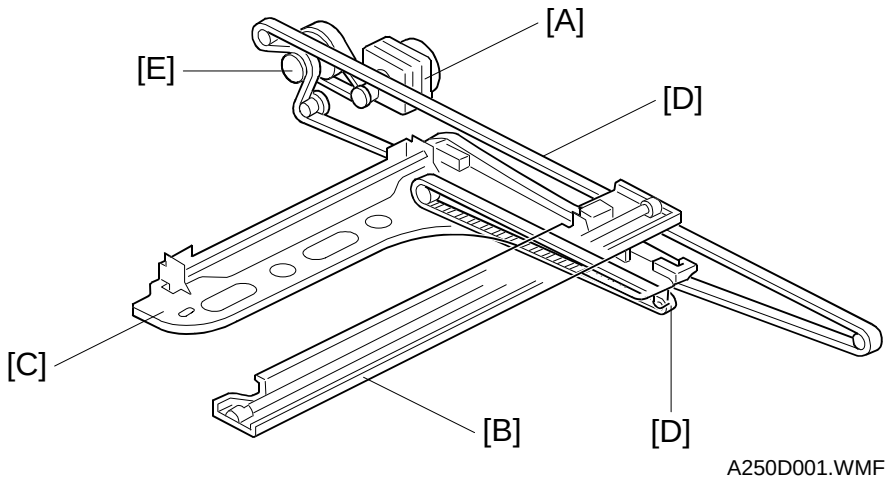

The scanner drive motor [A] (a stepper motor) drives the 1st and 2nd scanners [B, C] through the timing belts [D], scanner drive pulley [E], and the Accuride rail at the rear.

Book Mode

The main CPU controls and operates the scanner drive motor. In full size mode, the 1st scanner speed is 92 mm/s during scanning. The 2nd scanner speed is half that of the 1st scanner.

In reduction or enlargement mode, the scanning speed depends on the magnification ratio (M: 0.5 to 2.00). The returning speed is always the same, whether in full size or magnification mode.

Changing the scanner drive motor speed changes the magnification in the sub-scan direction. Use SP mode (SP4-101) to adjust this.

In the main scan direction, magnification is done by image processing on the BICU (Base Engine Image Control Unit) board. Adjust magnification in the main scan direction with SP4-008.

ADF Mode

The scanners remain in their home position (the scanner H.P sensor detects the 1st scanner) to scan the original. The ADF motor feeds the original through the ADF.

In reduction/enlargement mode, changing the ADF motor speed adjusts the image length in the sub-scan direction (adjust with SP6-007). The BICU board adjusts the magnification in the main scan direction, in the same way as in book mode (adjust with SP4-008).

2.1.3 ORIGINAL SIZE DETECTION IN PLATEN MODE

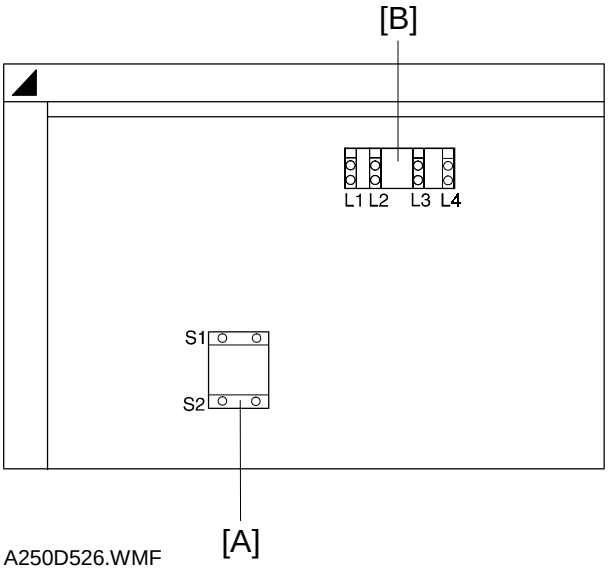

A250D526.WMF

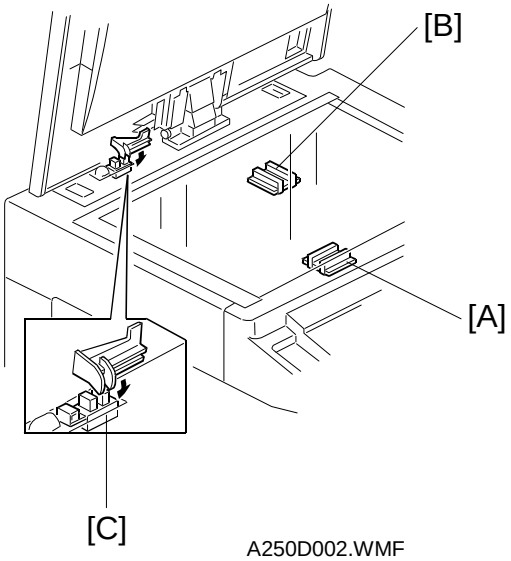

A250D002.WMF

In the optics cavity, there are four reflective sensors in the 115 V machines, and six reflective sensors in the 230 V machines. These are the original width sensors [A] and the original length sensors [B], and they detect the length and width of the original. They are also known as the APS (Auto Paper Selection) sensors.

While the main switch is on, these sensors are active and the original size data is always sent to the CPU. However, the CPU checks the data only when the platen cover is opened.

The main CPU takes the original size data when the platen cover sensor [C] activates. This is when the platen is about 15 cm above the exposure glass. At this time, only the sensor(s) located underneath the original receive the reflected light and switch on. The other sensor(s) remain off. The main CPU can recognize the original size from the on/off signals from the APS sensors.

If the copy is made with the platen fully open, the main CPU decides the original size from the sensor outputs when the Start key is pressed.

Original Size		Length Sensors				Width Sensors	
A4/A3 version	**LT/DLT version**	**L1**	**L2**	**L3**	**L4**	**S1**	**S2**
A3	11" x 17"	❍	❍	❍	❍	❍	❍
B4	10" x 14"	❍	❍	❍	❍	❍	✗
F4	8 1/2" x 14" (8" x 13")	❍	❍	❍	✗	✗	✗
A4-L	8 1/2" x 11"	❍	❍	✗	✗	✗	✗
B5-L	—	❍	✗	✗	✗	✗	✗
A4-S	11" x 8 1/2"	✗	✗	✗	✗	❍	❍
B5-S	—	✗	✗	✗	✗	❍	✗

❍: ON ✗: OFF

NOTE: The length sensors L1 and L2 are used only for 230 V machines.

For other combinations, the operation panel will display “CANNOT DETECT ORIG. SIZE”.

The above table shows the sensor output for each original size. This original size detection method eliminates the necessity for pre-scanning and increases the machine's productivity.

However, if the by-pass feed table is used, note that the machine assumes that the copy paper is lengthwise. For example, if A4 sideways paper is placed on the by-pass tray, the machine assumes it is A3 paper and scans a full A3 area, disregarding the original size sensors. However, for each page, the data signal to the laser diode is stopped to match the copy paper length detected by the registration sensor. This means that copy time for the first page may be slower (because of the longer time required for scanning), but it will be normal for the rest of the job.

2.2 IMAGE PROCESSING

2.2.1 OVERVIEW

Circuit

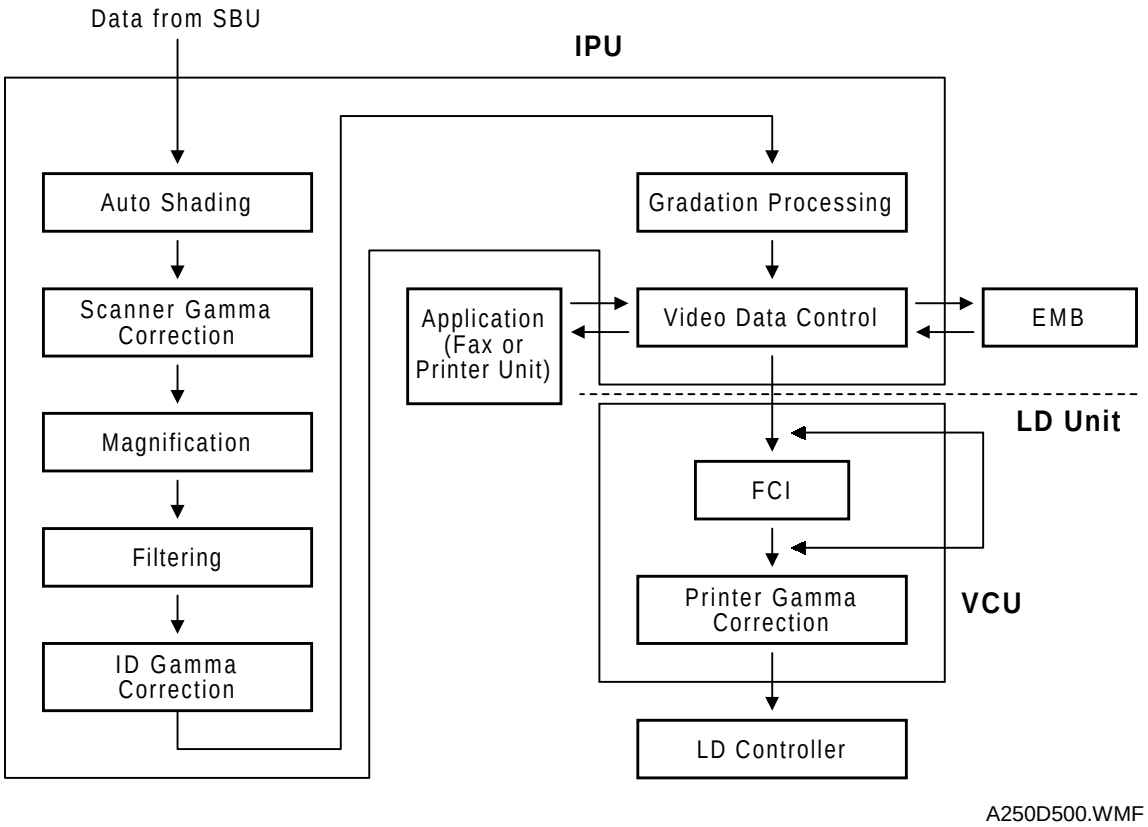

The CCD generates an analog video signal. The SBU (Sensor Board Unit) converts the analog signal to an 8-bit digital signal, then it sends the digital signal to the BICU (Base-engine and Image Control Unit) board.

The BICU board is divided into two image processing blocks; the IPU (Image Processing Unit), and memory.

- IPU: Auto shading, filtering, magnification, gamma (γ) correction, and gradation processing

Finally, the BICU board sends the video data to the LD unit at the correct time.

LD unit is divided into two blocks, VCU (Video Control Unit) and LD controller.

- VCU: FCI (Fine Character Image) – Smoothing, Printer gamma (γ) correction
- LD controller: LD print timing control

Image Quality Adjustments

The user can select text, text/photo, and photo mode, as usual. However, each of these original modes have a range of different types, as follows.

Image adjustment (08) in the user tools

Mode		Default		
Text	Toner Saving	Normal	Sharp	(Service Mode)
Text/Photo	—	Photo Priority	Text Priority	(Service Mode)
Photo	Coarse	Press Print	Glossy Print	(Service Mode)

The user can select the mode that best suits their original with the following user tool: User Tools - General Features - 08. Image Adjustment.

Notice that there is a “Service Mode” for each of the text, text/photo, and photo original modes. This is a customizable mode, with a range of SP modes that can be adjusted to meet user requirements that are not covered by the other original modes.

For details of the SP modes that can be used to adjust the image quality for all the original modes, see the Image Processing Summary section.

2.2.2 SBU (SENSOR BOARD UNIT)

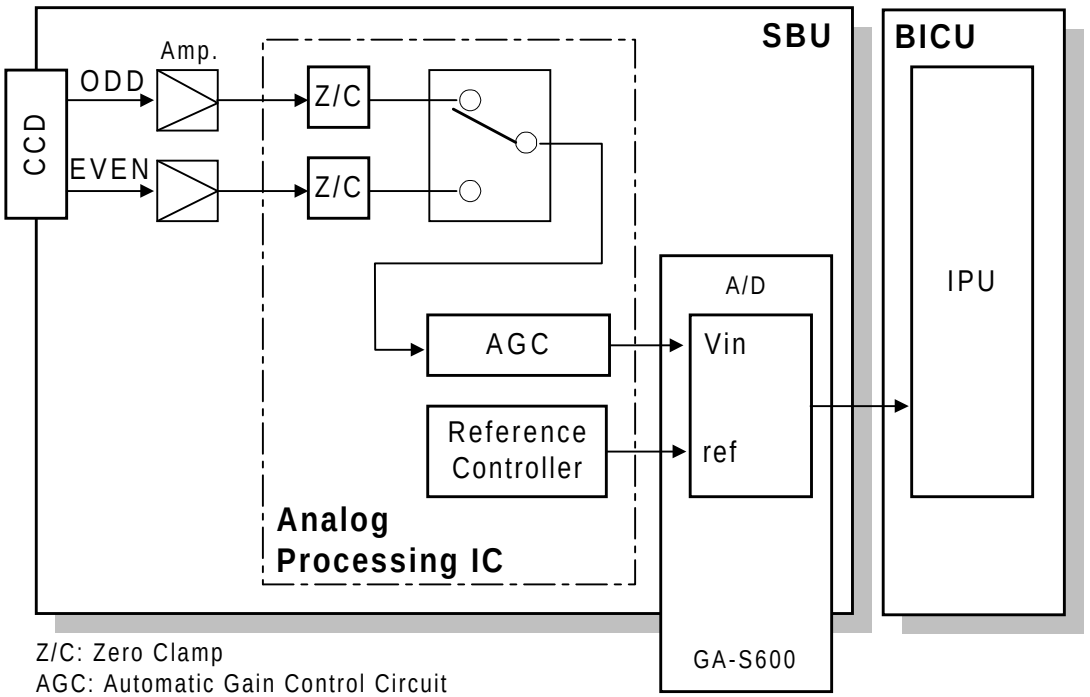

A250D502.WMF

The CCD converts the light reflected from the original into an analog signal. The CCD line has 7,450 pixels and the resolution is 600 dpi (23.6 dots/mm).

The CCD has two output lines, for odd and even pixels, to the analog processing IC. The analog processing IC does the following to the signals from the CCD:

1. Z/C (Zero Clamp):
   Adjusts the black level reference for even pixels to match the odd pixels.
2. Signal Composition:
   A switching device merges the analog signals for the odd and even pixels from the CCD.
3. Signal Amplification:
   Operational amplifiers in the AGC circuit amplify the analog signal. The CPU on the BICU board controls the maximum gains of the operational amplifiers.

After the processing mentioned above, the A/D converter converts the analog signals to 8-bit signals. This gives a value to each pixel on a scale of 256 grades. Then, the digitized image data goes to the BICU board.

2.2.3 AUTO IMAGE DENSITY (ADS)

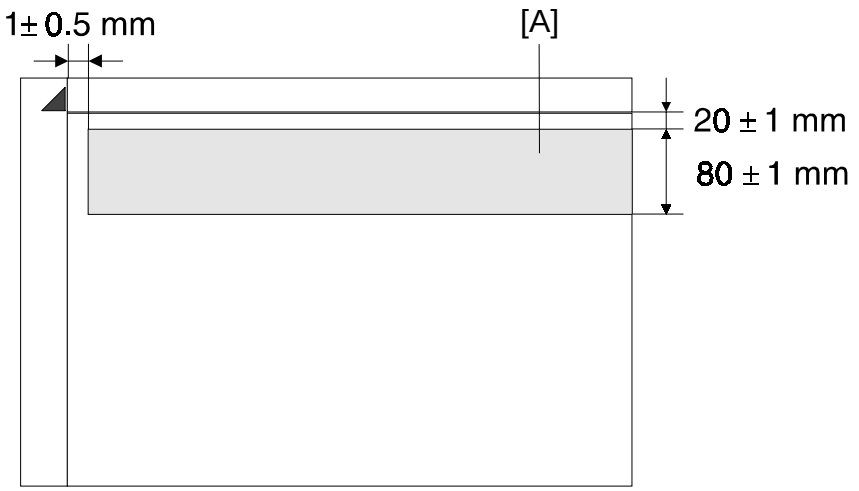

A250D004.WMF

In the SBU

ADS prevents the background of an original from appearing on copies.

The copier scans the image density area [A] detected by the ADS sensoras shown in the diagram. This corresponds to a few mm at one end of the main scan line. As the scanner scans down the page, the IPU on the BICU detects the peak white level for each scan line. The IPU determines the reference value for the A/D conversion for a particular scan line using the peak white level for that scan line. Then, the IPU sends the reference value to the reference controller circuit on the SBU.

When scanning an original with a gray background, the density of the gray area is the peak white level density. Therefore, the original background will not appear on copies. ADS corrects for any changes in background density down the page, because peak level data is taken for each scan line.

As with previous digital copiers, the user can select manual image density when selecting auto image density mode and the machine will use both settings when processing the original.

In the IPU

After the SBU process, the IPU board removes more background by adjusting the white level.

If the user selects a “Service Mode” original type with the user tools, these two ADS process can be either enabled or disabled (SP4-936, SP4-937), and the amount of white level change can be adjusted (SP4-938).

2.2.4 IMAGE PROCESSING UNIT (IPU)

Overview

The image data from the SBU goes to the Image Processing Unit (IPU) IC on the BICU board, which carries out the following processes with the image data:

- Auto shading
- Scanner gamma (γ) correction
- Magnification
- Filtering (MTF and smoothing)
- ID gamma (γ) correction
- Binary picture processing
- Error diffusion
- Dithering
- Video path control
- Test pattern generation

The image data then goes to either the LD controller or the FCI depending on the selected copy modes.

Auto Shading

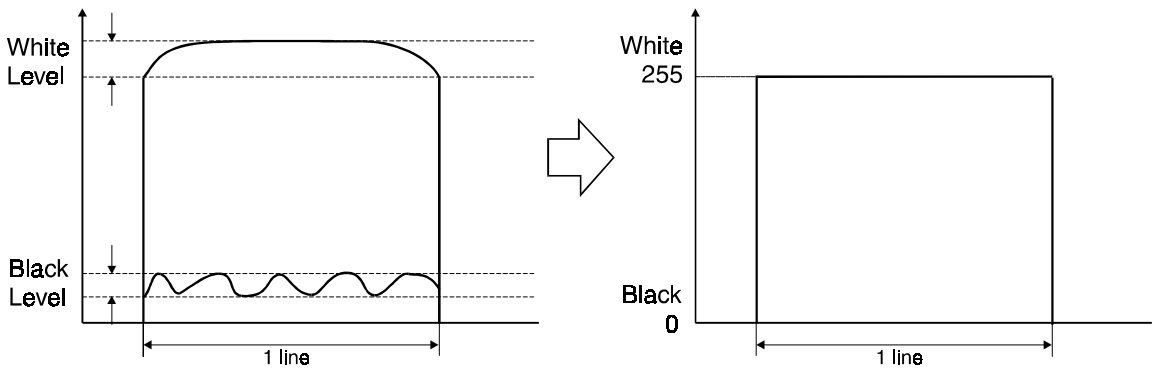

A250D517.WMF

As with previous digital copiers, there are two auto shading methods. One is black level correction and the other is white level correction. Auto shading corrects errors in the signal level for each pixel.

Black Level Correction

The CPU reads the black dummy data from one end of the CCD signal (32 pixels at the end are blacked off) and takes the average of the black dummy data. Then, the CPU deletes the black level value from each image pixel.

White Level Correction

Before scanning the original, the machine reads a reference waveform from the white plate. The average of the white video level for each pixel is stored as the white shading data in the FIFO memory in the IPU chip.

The video signal information for each pixel obtained during image scanning is corrected by the IPU chip.

Auto shading for the first original is done before the scanning.

After scanning every page, auto shading is done to prepare for the next page.

If the copy image density or the original mode is changed during copy run, the auto shading for the next scan is done before the scanning to respond to the mode changed.

White Line Erase Compensation

During the white level correction, if extremely low CCD output is detected in some parts of the line, the machine assumes this is due to abnormal black lines on the white plate. This low output is corrected using neighboring pixels. To switch off this correction, use SP4-918 (for the original modes known as “Service Mode”) and SP4-942 (other original modes).

Black Line Erase Compensation

In ADF mode, if extremely low CCD output is detected on the scanning line before the leading edge of original arrives there, this is attributed to abnormal black dots on the exposure glass. This low output is corrected using neighboring pixels. To adjust or switch off this correction, use SP4-919 (for the original modes known as “Service Mode”) and SP4-943 (other original modes).

Scanner Gamma (γ) Correction

The CCD output is not proportional to the quantity of the light received. Scanner gamma (γ) correction corrects the CCD output so that grayscale data is proportion to the quantity of the light received.

The machine has four possible scanner gamma curves. The curve used by the machine depends on the original type selected by the user (at the operation panel and with 08. Image Adjustment in the user tools). If the user selects one of the original modes known as “Service Mode”, the gamma curve can be selected with SP4-928.

If “0” is selected with SP 4-928, the scanner gamma curve is either AE or NAE, depending on the selected original mode (text, photo, etc.).

The four gamma (γ) correction curves and their characteristics are as follows:

- Non Auto Exposure ID linear (NAE): Corrects the image data in proportion to the original density.
- Auto Exposure ID linear (AE): Removes the background from the image data to some extent and corrects the rest of the image data in proportion to the original density.
- Reflection Ratio ID Linear (Linear): Uses the image data without correction.
- Removed background (SP): Removes the background area completely and corrects the rest of the image data in proportion to the original density.

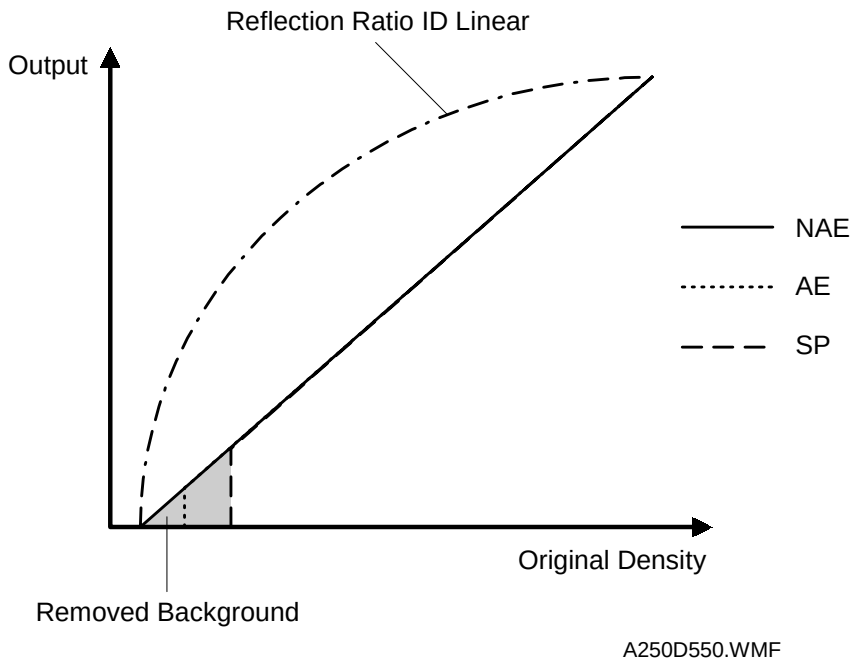

Main Scan Magnification/Reduction

Main Scan Magnification/Reduction

Changing the scanner speed enables reduction and enlargement in the sub-scan direction. However, the IPU chip handles reduction and enlargement in the main scan direction. The processing for main scan magnification/reduction is the same as in the previous digital machines.

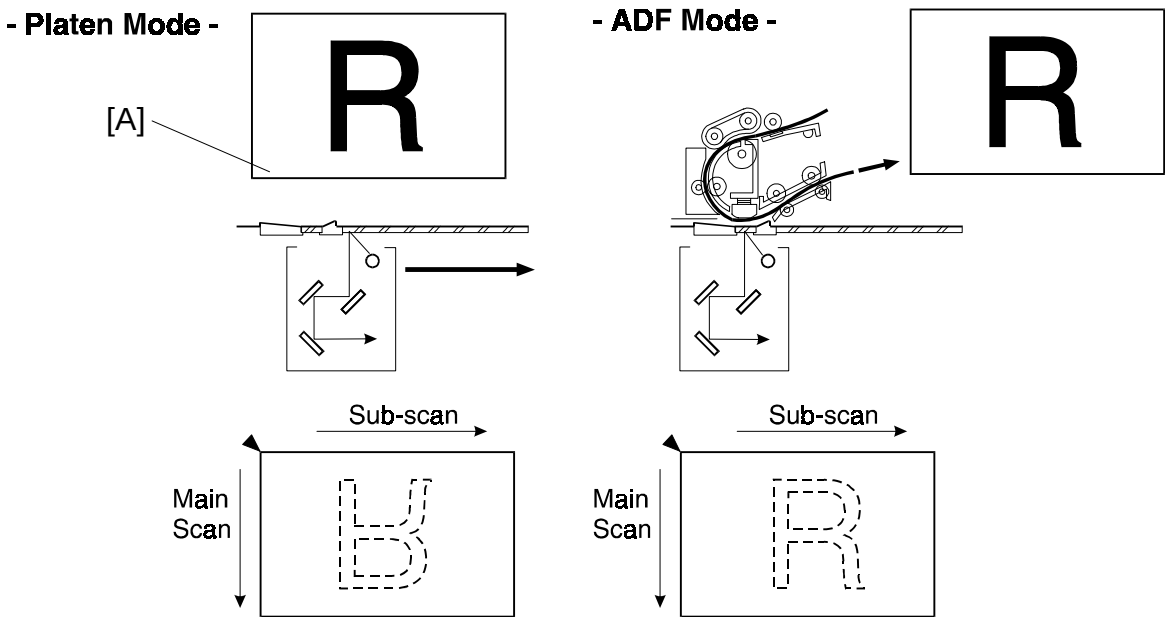

A250D504.WMF

When making a copy using the ADF, the magnification circuit creates a mirror image. This is because the scanning starting position in the main scan direction is at the other end of the scan line in ADF mode (compared with platen mode). In platen mode, the original is placed face down on the exposure glass, and the corner at [A] is at the start of the main scan. The scanner moves down the page. In ADF mode, the ADF feeds the leading edge of the original to the DF exposure glass, and the opposite top corner of the original is at the main scan start position.

To create the mirror image, the CPU stores each line a LIFO (Last In First Out) memory.

Filtering

Image adjustment (08) in the user tools

Mode		Default		
Text	Toner Saving	Normal	Sharp	(Service Mode)
Text/Photo	—	Photo Priority	Text Priority	(Service Mode)
Photo	Coarse	Press Print	Glossy Print	(Service Mode)

Overview

There are some software filters for enhancing the desired image qualities of the selected original mode. These filters are the MTF filter, the smoothing filter, and independent dot erase.

The MTF filter emphasizes sharpness and is used in Text and Text/Photo modes.

The smoothing filter is used in Photo mode, except for Glossy Photo mode (Glossy Photo mode is one of the photo modes that can be selected with User Tools - General Features - 08. Image Adjustment). In Glossy Photo mode, the MTF filter is used.

Independent dot erase removes unwanted dots from the image.

MTF Filter Adjustment - Text and Text/Photo Modes

When the user selects “Service Mode” for either Text or Text/Photo original type (User Tools - General Features - 08. Image Adjustment), the MTF filter and coefficient can be adjusted with SP4-915 and 4-916.

It is difficult to simply explain the relationships between the filter coefficient and filter strengths. Refer to the following charts to determine how to make the filters weaker or stronger. A large black dot indicates the default setting.

When the filter is stronger in the main scan direction, lines parallel to the feed direction are emphasized. When the filter is stronger in the sub-scan direction, lines at right angles to the feed direction are emphasized. A stronger MTF filter can make a low ID image visible but moiré may become more visible. Moiré is reduced using a smoothing filter specially designed for this purpose (see “Smoothing Filter Adjustment - Text/Photo”).

1. Text in Service Mode

SP \ Level	Week ←----------																							Strong
	1	2	3	4	5	6	7	8	9	10	11	12	13	14	15	16	17	18	19	20	21	22	23	24
Main Scan: Filter Confficient	0	1	3	1	3	1	3	3	4	1	3	15	3	1	1	15	4	15	3	3	3	15	3	3
Sub-scan: Filter Confficient	0	2	3	2	3	2	2	3	4	2	2	11	3	1	2	11	4	13	2	8	3	13	2	3
Main Scan: Filter Strength	0	2	2	3	3	4	4	4	4	5	5	2	5	0	0	3	5	3	0	0	0	3	0	0
Sub-scan: Filter Strength	0	2	2	3	3	4	4	4	4	5	5	3	5	6	0	3	5	3	0	5	0	4	6	6
Text in Service Mode																								
(50% ~ 95%)						●																		
Main • Confficient: 4-915-001						1																		
Sub • Confficient: 4-915-005						2																		
Main • Strength: 4-916-001						4																		
Sub • Strength: 4-916-005						4																		
(96% ~ 125%)										●														
Main • Confficient: 4-915-002										1														
Sub • Confficient: 4-915-006										2														
Main • Strength: 4-916-002										5														
Sub • Strength: 4-916-006										5														
(126% ~ 159%)													●											
Main • Confficient: 4-915-003													3											
Sub • Confficient: 4-915-007													3											
Main • Strength: 4-916-003													5											
Sub • Strength: 4-916-007													5											
(160% ~ 200%)																	●							
Main • Confficient: 4-915-004																	4							
Sub • Confficient: 4-915-008																	4							
Main • Strength: 4-916-004																	5							
Sub • Strength: 4-916-008																	5							

A250D601.WMF

2. Text/Phot in Service Mode

SP \ Level	Week																						Strong	
	1	2	3	4	5	6	7	8	9	10	11	12	13	14	15	16	17	18	19	20	21	22	23	24
Main Scan: Filter Confficient	0	1	3	1	3	1	3	3	4	1	3	15	3	1	1	15	4	15	3	3	3	15	3	3
Sub-scan: Filter Confficient	0	2	3	2	3	2	2	3	4	2	2	11	3	1	2	11	4	13	2	8	3	13	2	3
Main Scan: Filter Strength	0	2	2	3	3	4	4	4	4	5	5	2	5	0	0	3	5	3	0	0	0	3	0	0
Sub-scan: Filter Strength	0	2	2	3	3	4	4	4	4	5	5	3	5	6	0	3	5	3	0	5	0	4	6	6
Text in Service Mode																								
(50% ~ 89%)					●																			
Main • Confficient: 4-915-009					3																			
Sub • Confficient: 4-915-014					3																			
Main • Strength: 4-916-009					3																			
Sub • Strength: 4-916-014					3																			
(90% ~ 95%)					●																			
Main • Confficient: 4-915-010					3																			
Sub • Confficient: 4-915-015					3																			
Main • Strength: 4-916-010					3																			
Sub • Strength: 4-916-015					3																			
(96% ~ 125%)										●														
Main • Confficient: 4-915-011										1														
Sub • Confficient: 4-915-016										2														
Main • Strength: 4-916-011										5														
Sub • Strength: 4-916-016										5														
(126% ~ 159%)										●														
Main • Confficient: 4-915-012										1														
Sub • Confficient: 4-915-017										2														
Main • Strength: 4-916-012										5														
Sub • Strength: 4-916-017										5														
(160% ~ 200%)										●														
Main • Confficient: 4-915-013										1														
Sub • Confficient: 4-915-018										2														
Main • Strength: 4-916-013										5														
Sub • Strength: 4-916-018										5														

Detailed Descriptions

A250D602.WMF

Smoothing Filter Adjustment - Photo Mode

Image adjustment (08) in the user tools

Mode		Default		
Text	Toner Saving	Normal	Sharp	(Service Mode)
Text/Photo	—	Photo Priority	Text Priority	(Service Mode)
Photo	Coarse	Press Print	Glossy Print	(Service Mode)

When the user selects “Service Mode” for Photo original type (User Tools - General Features - 08. Image Adjustment), the smoothing filter can be changed with SP4-927. A stronger smoothing filter makes the image more blurred (1: Weak ~ 8: Strong).

Smoothing Filter Adjustment - Text and Text/Photo Modes

To reduce the possibility of moiré, a small-matrix smoothing filter is used after scanner gamma (γ) correction in the Text and Text/Photo mode. The level of smoothing can be adjusted with SP4-921 (0: Weak, 1: Normal, 2: Strong, 3: Disabled).

This is only used when the user selects “Service Mode” for either Text or Text/Photo original type (User Tools - General Features - 08. Image Adjustment).

Independent Dot Erase

In Text mode and in Text/Photo mode, independent dots are detected using a 7 x 9 matrix and erased from the image.

The independent dot detection level can be adjusted with SP4-917 (for the original modes known as “Service Mode”) and SP4-944 (other original modes – on/off only; no adjustment). With a larger SP setting, more dots are detected as independent dots and erased, even if the dot's density is high. However, dots in mesh-like images may be detected as independent dots mistakenly.

Independent Dot Erase after Binary Picture Processing

Image adjustment (08) in the user tools

Mode		Default		
Text	Toner Saving	Normal	Sharp	(Service Mode)
Text/Photo	—	Photo Priority	Text Priority	(Service Mode)
Photo	Coarse	Press Print	Glossy Print	(Service Mode)

Normally, independent dot erase is done in the filtering stage. However, when the user selects “Service Mode” for Text original type (User Tools - General Features - 08. Image Adjustment), independent dots may reappear in the image after the binary picture processing. These independent dots are erased after gradation processing.

SP4-939 changes the filter that is used for this process, and it can be also used to disable this feature. A smaller matrix is more likely to remove dots.

ID Gamma (γ) Correction

ID Gamma (γ) Correction

Image adjustment (08) in the user tools

Mode		Default		
Text	Toner Saving	Normal	Sharp	(Service Mode)
Text/Photo	—	Photo Priority	Text Priority	(Service Mode)
Photo	Coarse	Press Print	Glossy Print	(Service Mode)

The machine automatically selects the most appropriate ID gamma correction based on the selected original type (and the user tool Image Adjustment setting) and ID setting made at the operation panel.

When the user selects “Service Mode” for any original type (User Tools - General Features - 08. Image Adjustment), you can use SP4-940 to change ID correction in service mode. The types that can be selected with SP4-940 are different for each original mode (Text, Text/Photo, or Photo).

Gradation Processing

Image adjustment (08) in the user tools

Mode		Default		
Text	Toner Saving	Normal	Sharp	(Service Mode)
Text/Photo	—	Photo Priority	Text Priority	(Service Mode)
Photo	Coarse	Press Print	Glossy Print	(Service Mode)

Overview

The 8-bit image data is converted into 1-bit data (there is no 8-bit greyscale processing, only the 1-bit process known as binary picture processing).

However, different techniques are used, depending on the selected original type (text, text/photo, photo) and user tool Image Adjustment setting.

These techniques are simple binary picture processing, error diffusion, and dithering. To see which process is used, see the flow charts in the Image Processing Summary section.

- Simple binary picture processing: Each video signal pixel is converted from 8-bit to 1-bit (black and white image data) in accordance with a threshold value.
- Error diffusion: Error diffusion is a more complex process using a threshold value and the values of nearby pixels in an 8 x 8 matrix. In text/photo mode, error diffusion reduces the difference in contrast between light and dark areas of a halftone image. In text mode, it prevents parts of low contrast text from disappearing from the copy.
- Dithering: Each pixel is compared with a pixel in a dither matrix.

In error diffusion or simple binary picture processing, there are two possible types of threshold: constant threshold, and dynamic threshold.

- The type that is used depends on the selected original type (text, text/photo, photo) and user tool Image Adjustment setting.
- However, if the user selects “Service Mode” for either Text or Text/Photo original type (User Tools - General Features - 08. Image Adjustment), the thresholding type can be changed with SP4-922.

Dithering is only used in Photo mode (except for Glossy Photo, in which error diffusion is used).

Constant Threshold Value

If the constant threshold method is used, the threshold remains the same all the time.

The threshold can be adjusted with SP 4-923 when the user selects “Service Mode” for the Text original type (User Tools - General Features - 08. Image Adjustment).

Decreasing the threshold value creates a darker image.

Dynamic Threshold Value

Overview

Dynamic thresholding is designed to clearly separate text/vector graphic objects from the background.

When used with simple binary picture processing (Sharp Text mode)

The software compares each pixel with the pixels immediately surrounding it. It is tested in four directions: horizontal, vertical, and in the two diagonal directions. If the image density difference between the object pixel and the surrounding pixels is more than a certain value in any one of these directions, the pixel is determined to be on an edge.

Pixels on the edge are treated with dynamic thresholding. The threshold is calculated by averaging the densities of pixels in the surrounding 7 x 7 area. However, the calculated threshold cannot exceed maximum and minimum limits; if it does, the upper or lower limit is used.

Pixels that are not on an edge are treated with a constant threshold value.

As a side-effect of the dynamic threshold process, copies of originals where the rear side is visible through the paper or the background is dark, may tend to have dirty background. In this case it is necessary to adjust the image density level with the image density key on the operation panel.

Instead of sharp text mode, if the user selects “Service Mode” for Text original type (User Tools - General Features - 08. Image Adjustment), some adjustments can be made.

- Edge detection: SP4-931 (vertical direction), 4-932 (horizontal direction), 4-933 (diagonal from top right to bottom left), 4-934 (diagonal from top left to bottom right). Decreasing the SP mode value causes a lighter line to be detected as an edge.
- Threshold limits for edges, and the threshold for non-edge pixels: SP4-924 (Max), 4-925 (Min), and 4-926 (Center, used for non-edge pixels). The closer that the upper or lower limit is adjusted to the center threshold, the fewer stains appear. However, a low ID contrast image cannot be copied.

When used with error diffusion (Normal Text)

After error diffusion processing, dynamic thresholding uses 64 threshold values in an 8 x 8 matrix. This process prevents low contrast text from disappearing.

If the user selects “Service Mode” for Text/Photo original type and the thresholding type is changed from constant to dynamic, an error diffusion filter can be selected with SP4-929-1 (No.1: 4 x 4 matrix and No.2: 8 x 8 matrix). The two selections are prepared for future use to match original types which are not supported currently. Therefore, at this moment SP4-929-1 should not be used.

Dithering

If the user selects “Service Mode” for Text/Photo original type, the dither matrix can be selected with SP4-929-2. A larger value for this SP mode increases the number of gradations. However, the image will not have much contrast.

2.2.5 MEMORY CONTROLLER AND EXTENDED MEMORY BOARD (EMB)

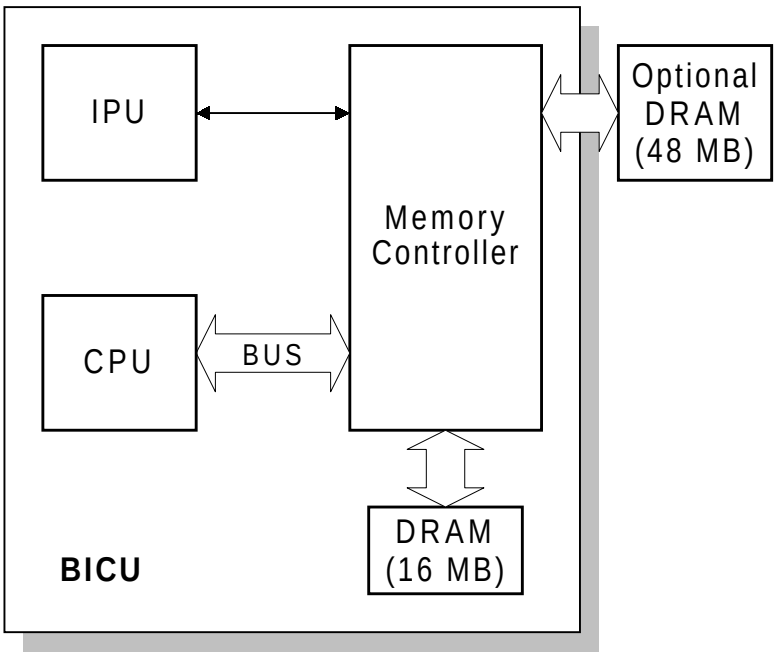

A250D528.WMF

The BICU consists of the memory controller and the DRAM. The functions of each device are as follows.

Memory Controller:	Compressing the 1-bit image data Image rotation Image data transfer to the DRAM
DRAM (standard 16MB):	Stores the compressed data Working area

The data goes to the memory controller after binary picture processing. The data is first compressed and then stored in the DRAM. When printing, the data from the DRAM goes back to the memory controller, where it is decompressed and image editing is done (e.g., image rotation, repeat image).

The memory capacity changes after installing optional memory on the BICU board, as follows.

		Standard (16 MB)	16 MB + Optional (64 MB total)
Number of pages	A4 6%	80	99
	ITU-T#4 (12% black)	35	99

2.2.6 VIDEO CONTROL UNIT (VCU)

Fine Character and Image (FCI)

The FCI performs image smoothing and line width correction. These functions only affect binary picture processed images in sharp text mode.

Smoothing

Fig. A

Fig. B

Fig. C

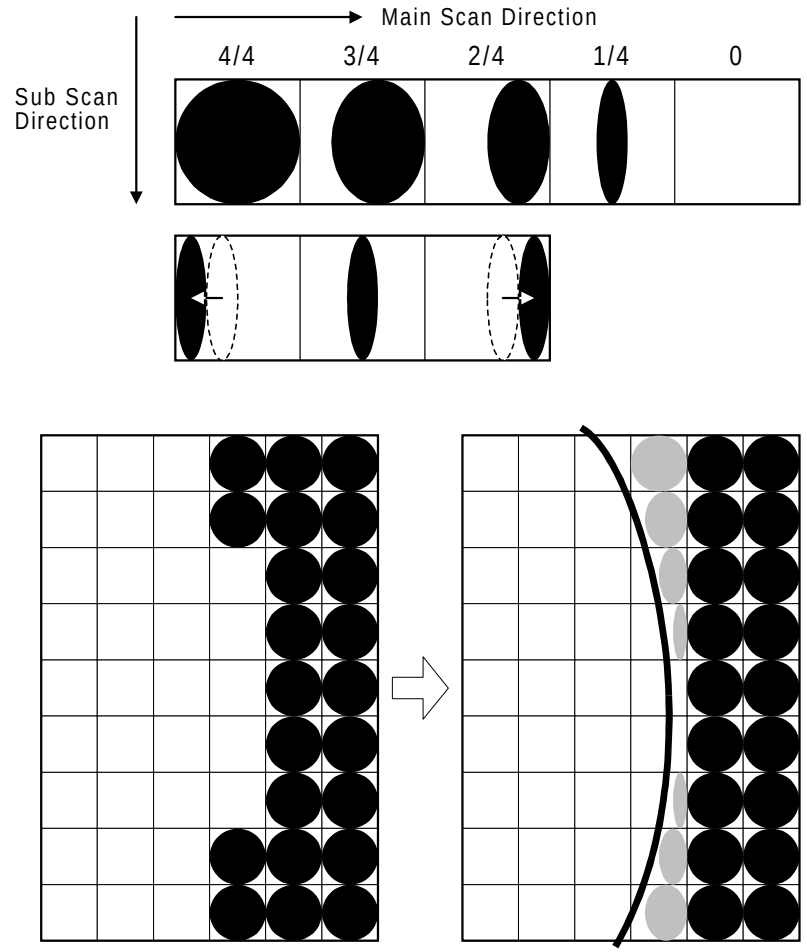

A250D554.WMF

Usually, binary picture processing generates jagged edges on characters, as shown in the above illustration. These are reduced using edge smoothing. The FCI changes the laser pulse duration and position for certain pixels.

Fig. A shows the four possible pulse durations, and Fig. B shows how the laser pulse can be in one of three positions within the pixel. Fig. C shows an example of how edge smoothing is used.

SP2-902 switches FCI smoothing on or off.

Toner Saving in Text Mode

Image adjustment (08) in the user tools

Mode		Default		
Text	Toner Saving	Normal	Sharp	(Service Mode)
Text/Photo	—	Photo Priority	Text Priority	(Service Mode)
Photo	Coarse	Press Print	Glossy Print	(Service Mode)

When toner saving in text mode is selected in the image adjustment sub-menu (08) of the user tools menu, an 8 x 8 matrix filter reduces the number of black dots in the image. As a result, less toner is used to create the latent image on the drum.

Printer Gamma (γ) Correction

Printer correction corrects the data output from the IPU to the laser diode to account for the characteristics of the printer (e.g., the characteristics of the drum, laser diode, and lenses).

The machine chooses the most suitable gamma curve for the original type selected by the user. There is no SP adjustment for this.

2.2.7 IMAGE PROCESSING SUMMARY

Text (Normal)

This mode decreases moiré and prevents parts of low contrast text from disappearing from the copy.

Recommended Originals: Normal text originals

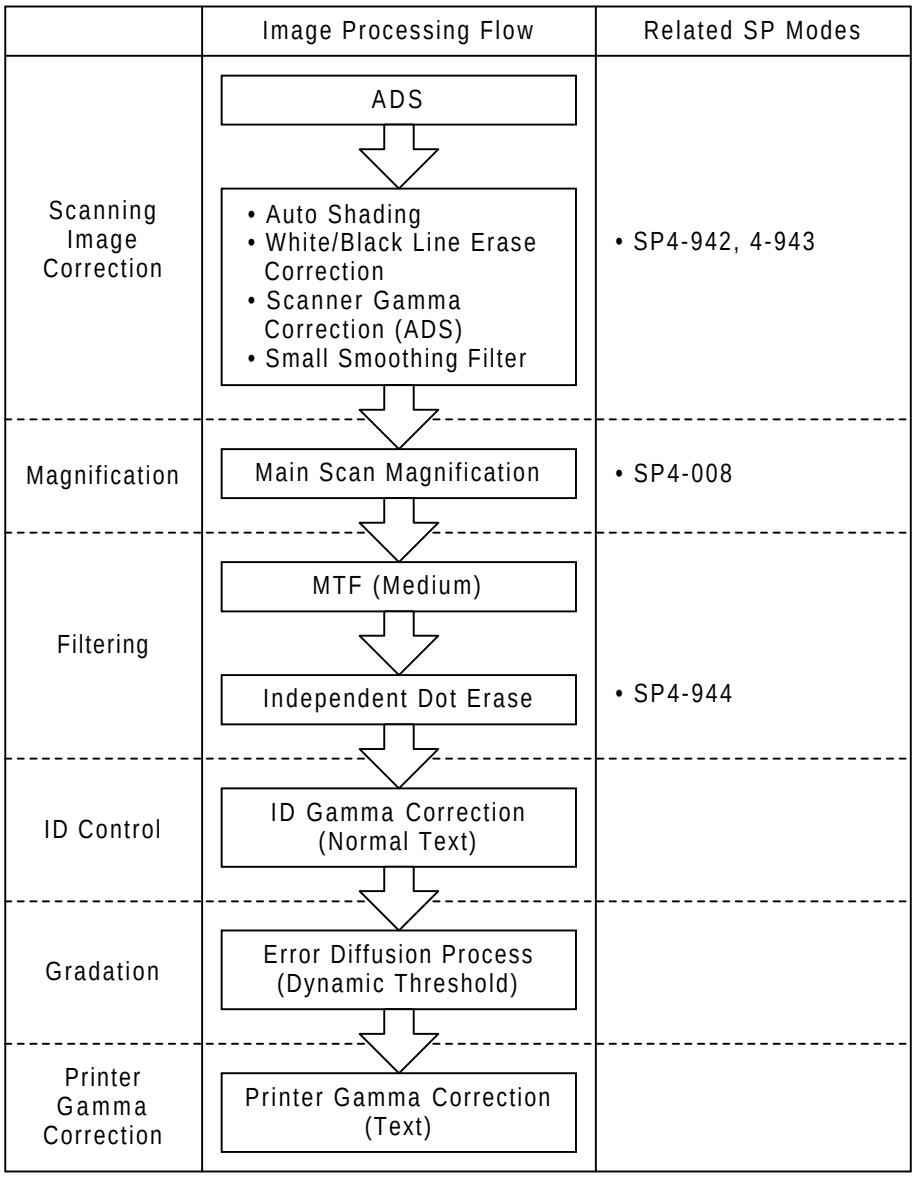

A250D605.WMF

The “Toner Saving” setting uses the above processes, and also uses the toner saving matrix.

Text (Sharp)

This mode prevents the rear side of a thin original from being visible, and the copy will have a lot of contrast.

Recommended Originals: Newspaper, originals through which the rear side is visible.

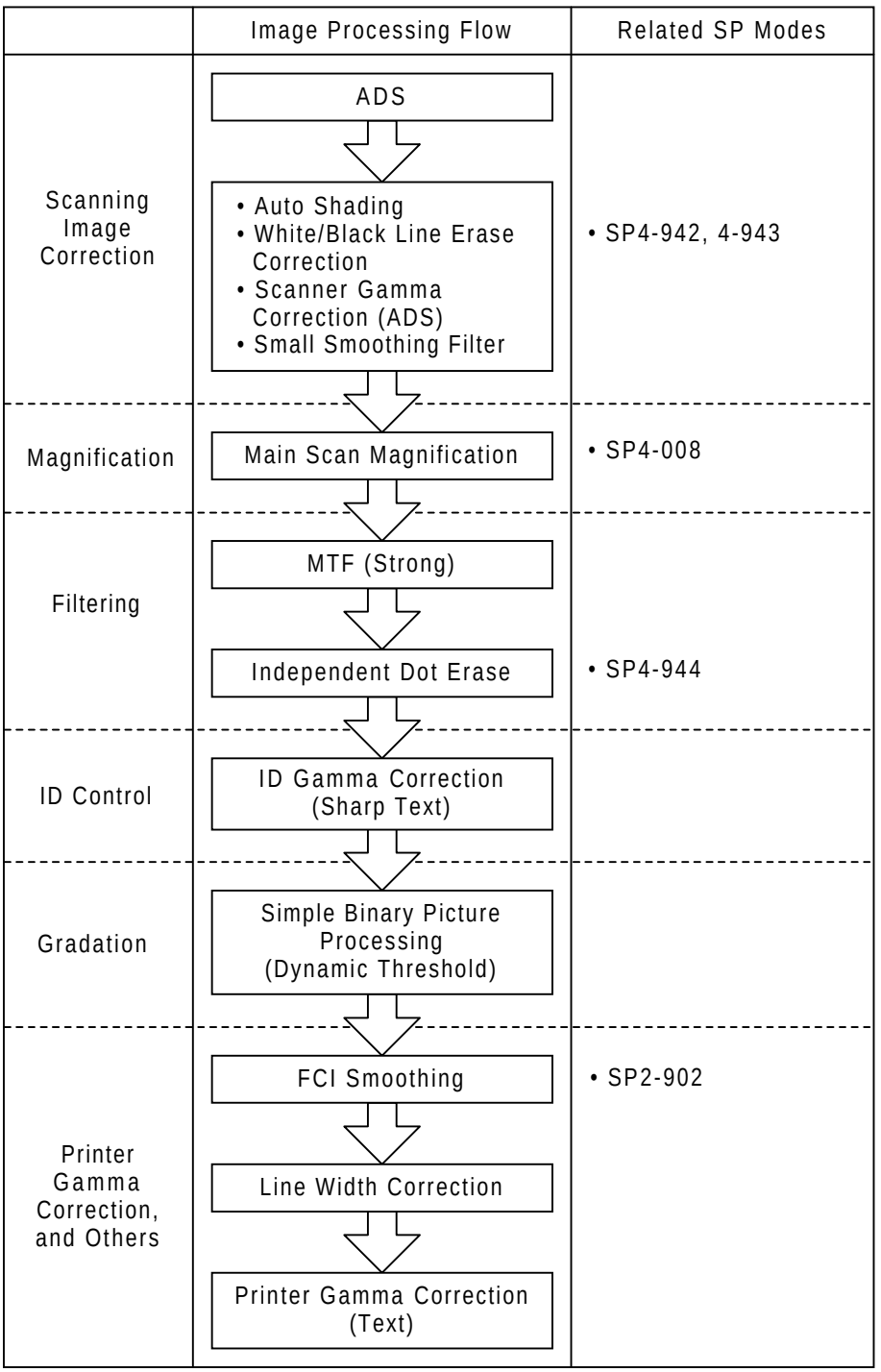

A250D606.WMF

Text (Service Mode)

For special text originals that need custom settings to produce the required copy quality.

	Image Processing Flow	Related SP Modes
Scanning Image Correction	ADS	• SP4-936-1 • SP4-937-1 • SP4-938-1
	• Auto Shading • White/Black Line Erase Correction • Scanner Gamma Correction (Linear) • Small Smoothing Filter	• SP4-918-1, 4-919-1 • SP4-928-1 • SP4-921-1
Magnification	Main Scan Magnification	• SP4-008
Filtering	MTF (Strong)	• SP4-915-1 ~ 8 • SP4-916-1 ~ 8
	Independent Dot Erase	• SP4-917-1
ID Control	ID Gamma Correction (Sharp Text)	• SP4-940-1
Gradation	Simple Binary Picture Processing (Dynamic Threshold)	• SP4-922-1 • SP4-923 • SP4-924, 4-925, 4-926 • SP4-931 to 934
Printer Gamma Correction and Others	Independent Dot Erase Line Width Correction	• SP4-939 • SP4-935-1
	Printer Gamma Correction (Text)	

A250D607.WMF

Text/Photo (Photo Priority)

This mode emphasizes gradation and picture reproduction.

Recommended Originals: Text/photo originals which contain mainly photo areas.

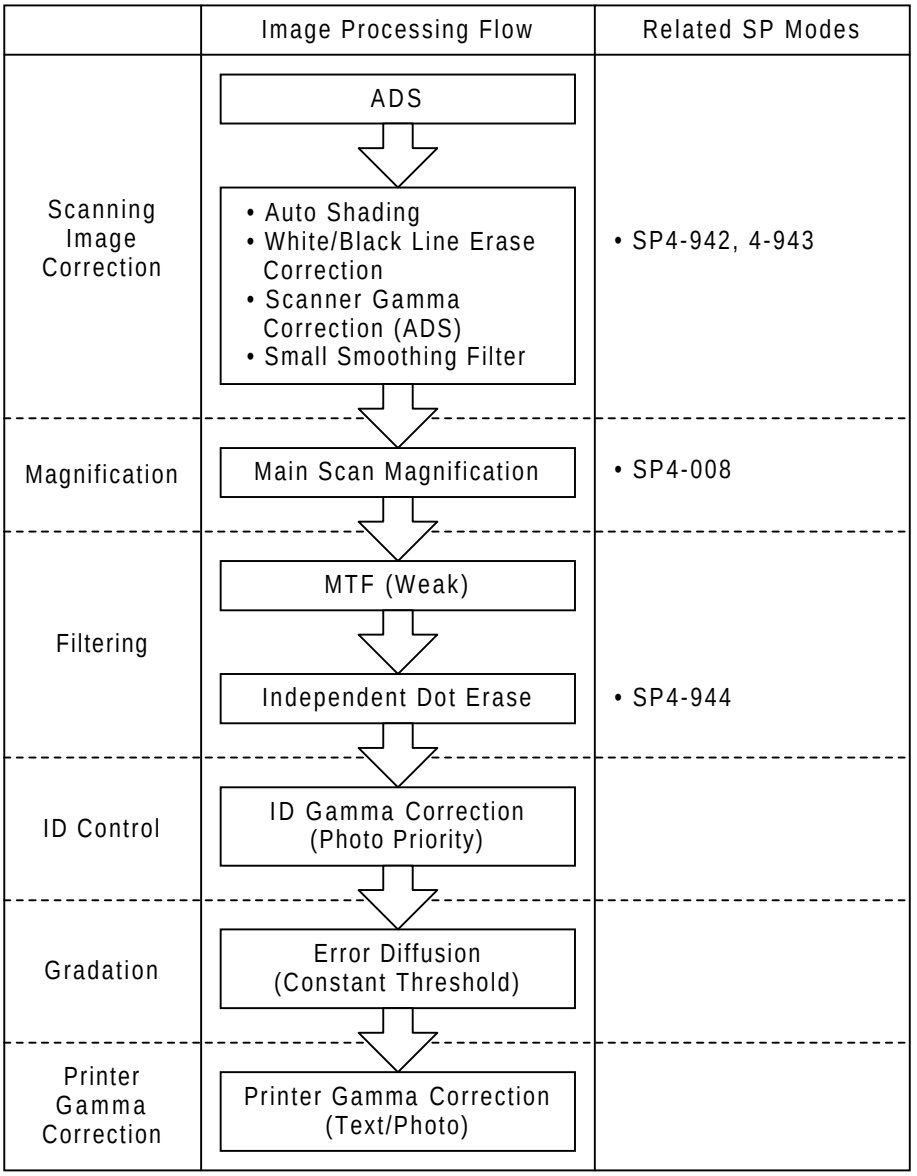

A250D608.WMF

Text/Photo (Text Priority)

This mode maintains gradation and prevents characters in text from being deformed.

Recommended Originals: Text/photo originals which contain mainly text areas.

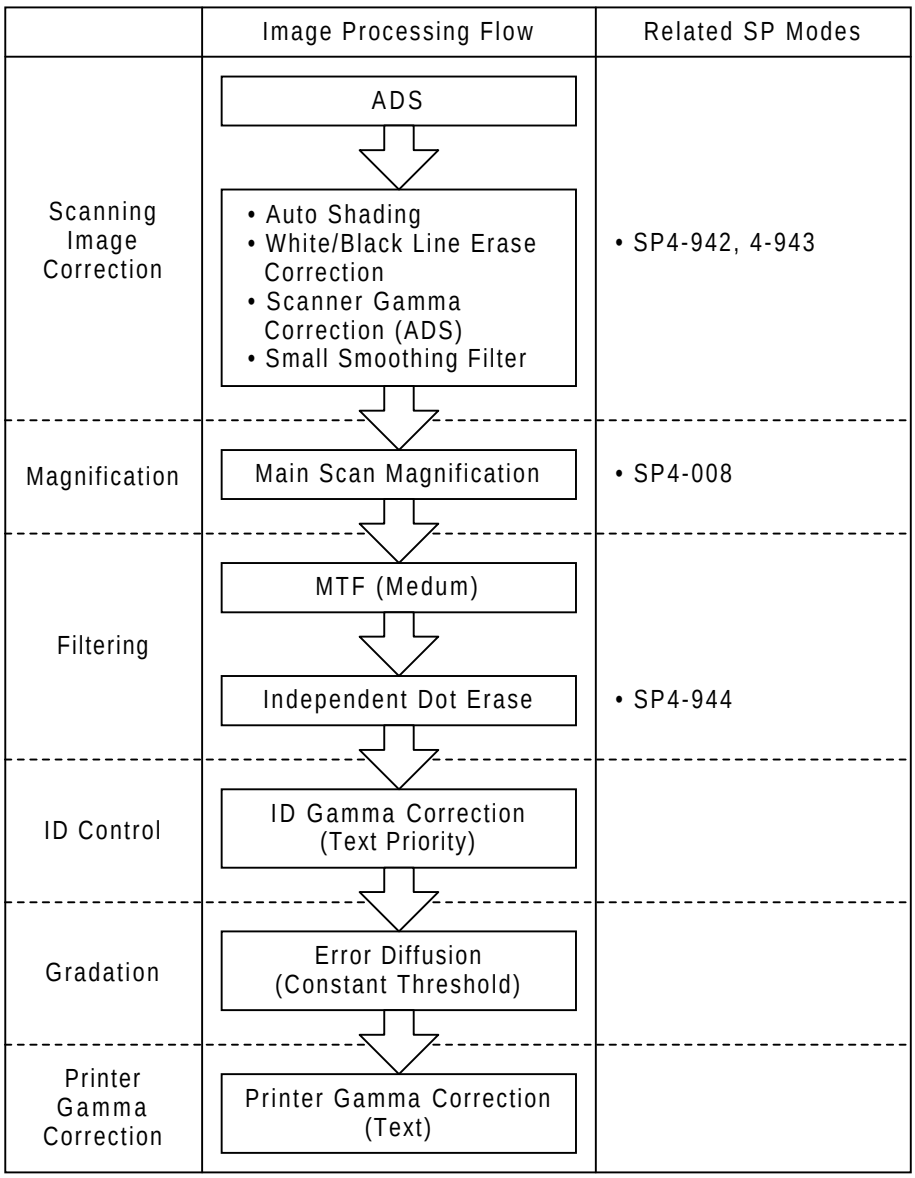

A250D609.WMF

Text/Photo (Service Mode)

For special text/photo originals that need custom settings to produce the required copy quality.

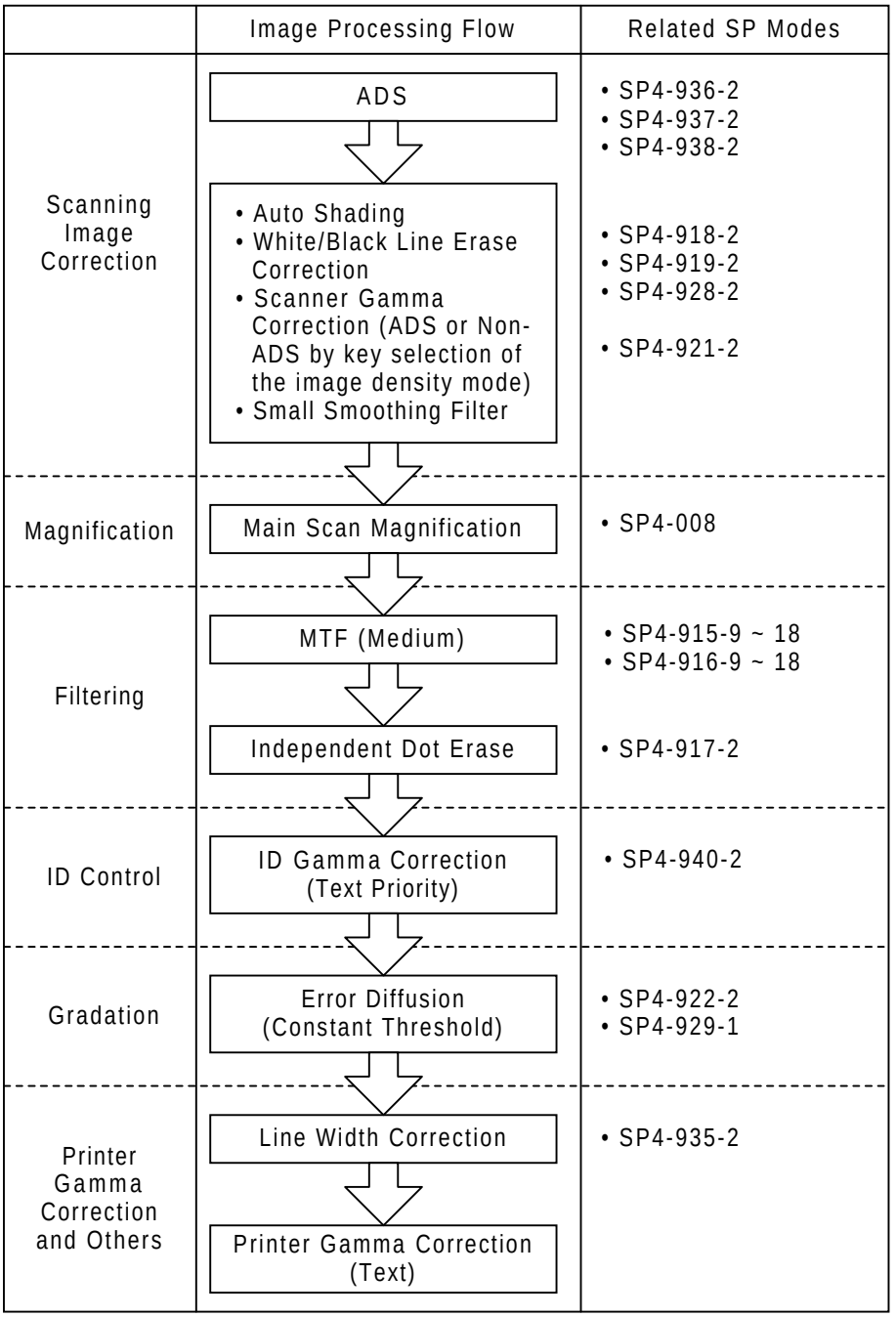

A250D610.WMF

Photo (Coarse Print)

This mode emphasizes contrast of photo images, and results in coarse gradation.

Recommended Originals: Large-image printed originals, with no text.

	Image Processing Flow	Related SP Modes
Scanning Image Correction	• Auto Shading • White/Black Line Erase Correction • Scanner Gamma Correction (Non-ADS) • Small Smoothing Filter	• SP4-942, 4-943
Magnification	Main Scan Magnification	• SP4-008
Filtering	Smoothing Filter	
ID Control	ID Gamma Correction (Coarse Print)	
Gradation	Dithering (Matrix 53 Lines)	
Printer Gamma Correction	Printer Gamma Correction (Photo)	

A250D611.WMF

Photo (Press Print)

This mode emphasizes contrast of photo images, and results in medium gradation

Recommended Originals: Fine-image printed originals, with no text.

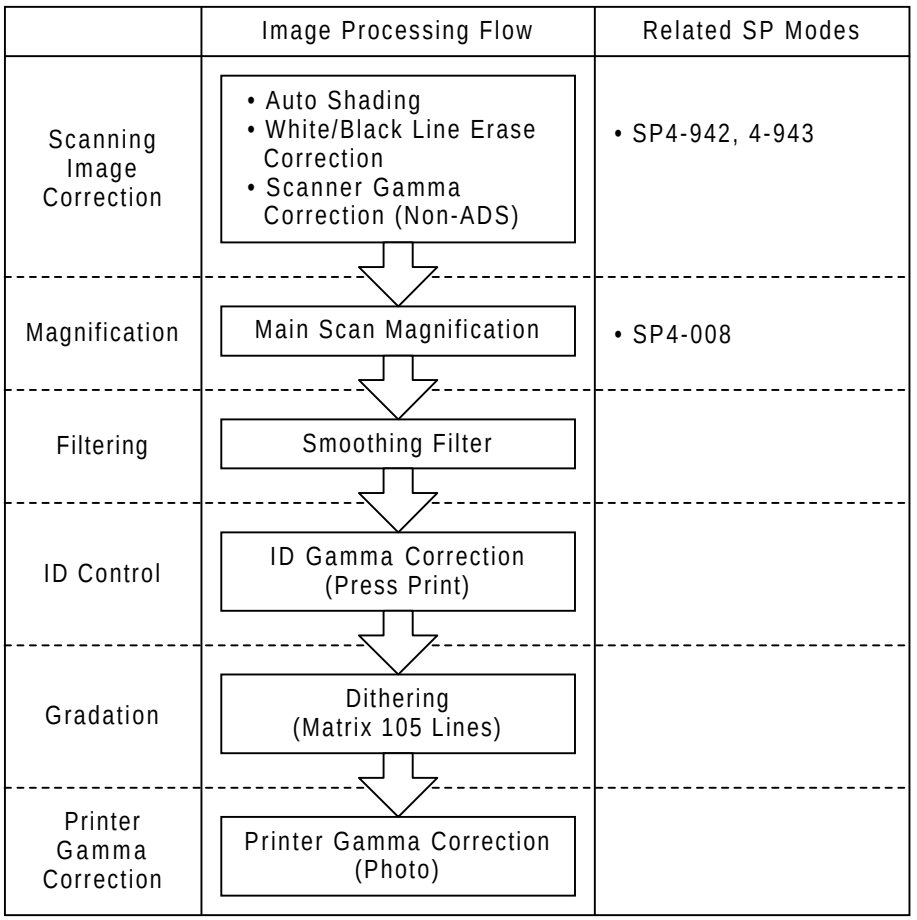

A250D612.WMF

Photo (Glossy Photo)

This mode maintains the resolution of the original and reproduces the fine gradations.

Recommended Original: Glossy photos

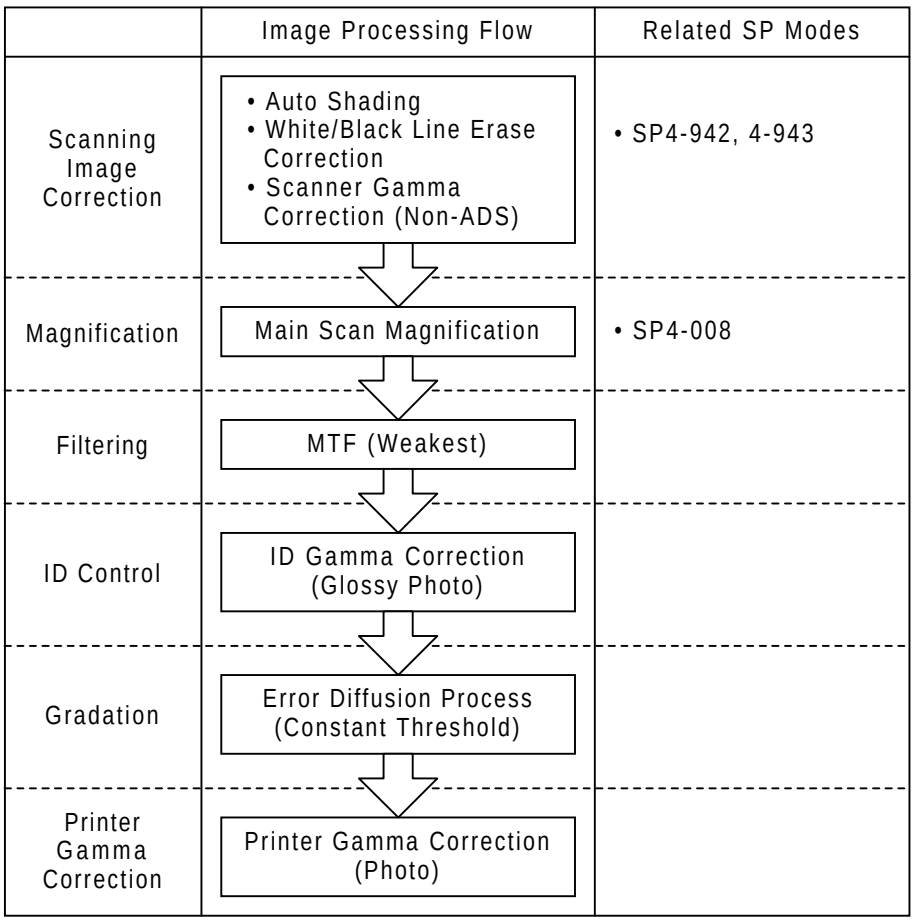

A250D613.WMF

Photo (Service Mode)

For special photo originals that need custom settings to produce the required copy quality.

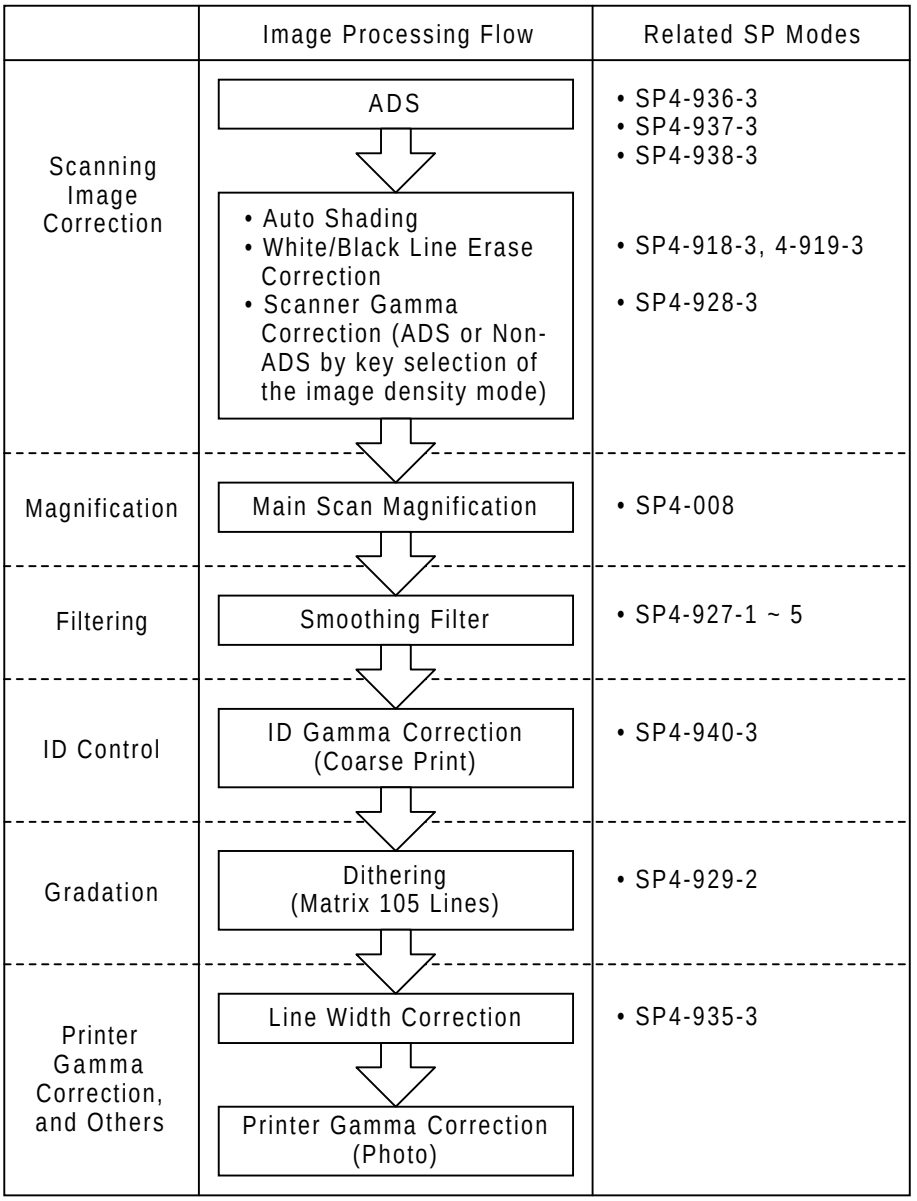

A250D614.WMF

2.3 LASER EXPOSURE

2.3.1 OVERVIEW

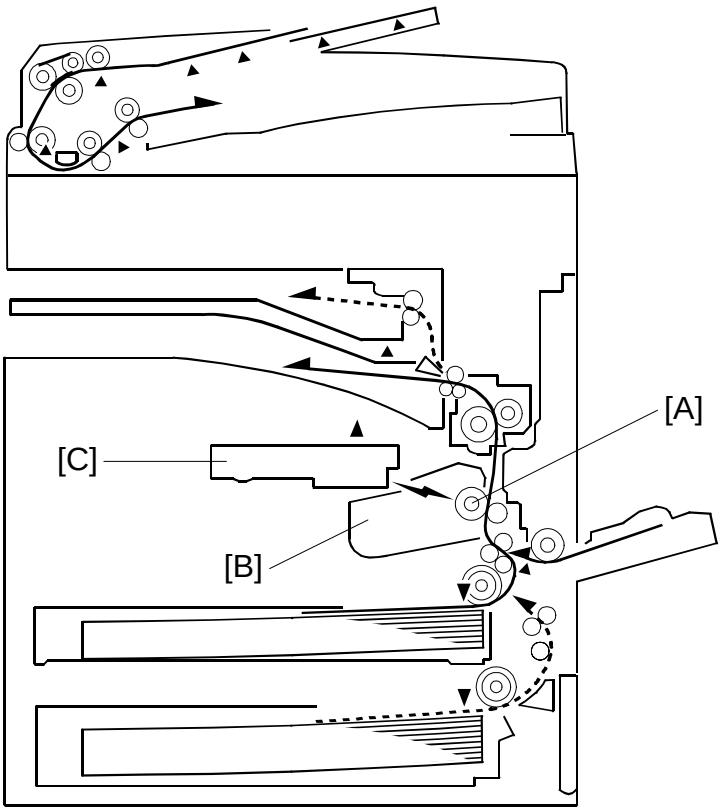

A250D000.WMF

This machine uses a laser diode to produce electrostatic images on the OPC drum [A] in the all-in-one cartridge [B]. The laser diode unit [C] converts image data from the BICU board into laser pulses, and the optical components direct these pulses to the drum.

Laser beam exposure on the drum creates the latent image. The laser beam makes the main scan while drum rotation controls the sub-scan.

Strength of the beam output	5 mW
Strength of the beam on the drum	0.636 mW
Printing	Binary

Polygon mirror motor speed:

Resolution (dpi)	Motor Speed (rpm)	Data Frequency (MHz)
600	22478.22	22.0926

2.3.2 OPTICAL PATH

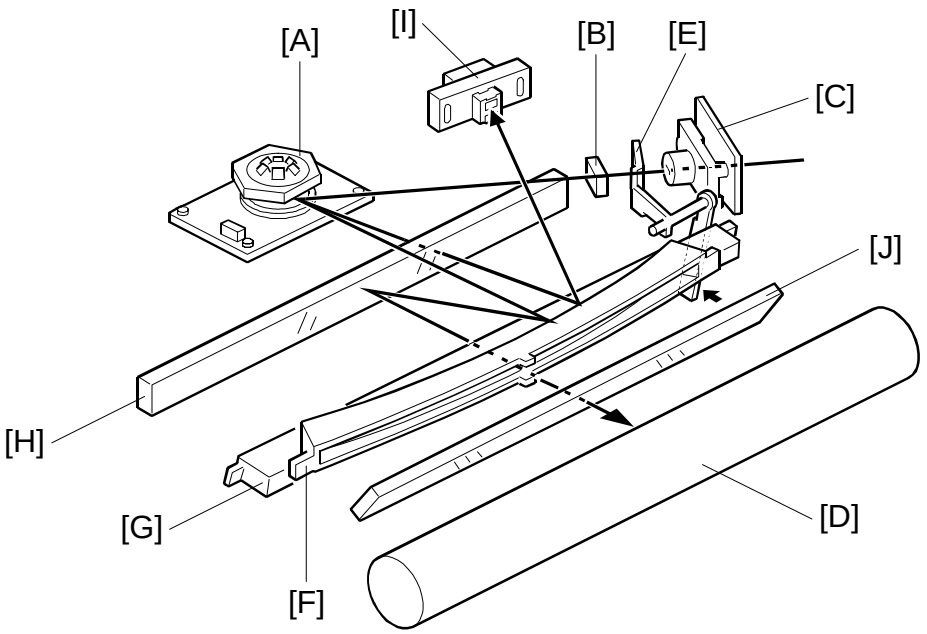

[A]: Polygonal mirror
[B]: Cylindrical lens
[C]: LD drive board
[D]: Drum
[E]: LD shutter
[F]: F-theta mirror
[G]: BTL (Barrel Toroidal Lens)
[H]: 1st mirror
[I]: Laser synchronization detector
[J]: Toner shield glass

The optical path from the laser diode to the drum is shown above.

The LD drive board [C] outputs the laser beam to the polygonal mirror [A] through the cylindrical lens [B], which focus the laser beam.

The laser beam goes to the F-theta mirror [F], 1st mirror [H] and BTL [G]. Then, the beam reaches the drum [D] through the toner shield glass [J].

The beam reflected by the polygonal mirror writes the pixels of the latent image on the drum. The F-theta mirror [F] ensures constant intervals between the pixels. The BTL [G] corrects for irregularities in the polygonal mirror faces.

The laser synchronization detector [I] synchronizes the start of the main scan.

2.3.3 AUTO POWER CONTROL (APC)

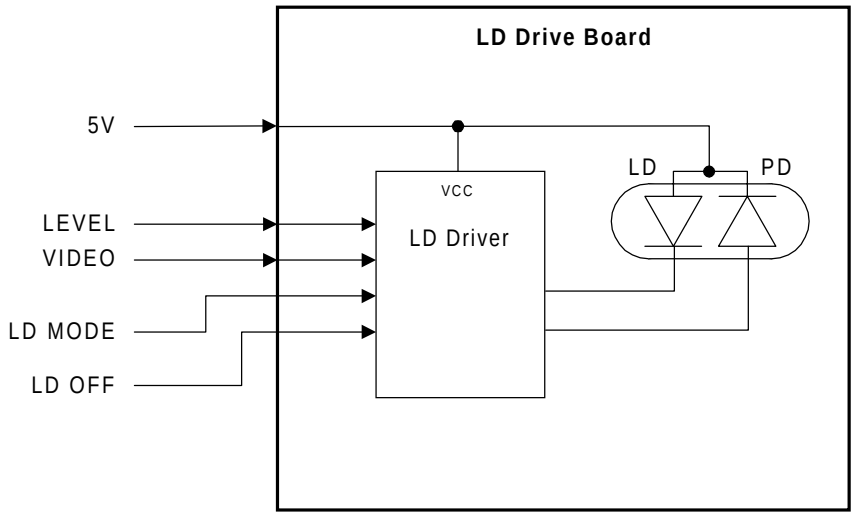

A250D308.WMF

To prevent the intensity of the laser beam from changing because of the temperature, the machine monitors the laser beam with a photodiode (PD). The PD is enclosed in the laser diode. The PD passes an electrical current to the LD driver IC and this IC adjusts its output level to keep the laser diode output constant.

The laser diode power level is adjusted on the production line.

CAUTION: Do not touch the variable resistors on the LD unit in the field.

2.3.4 LD SAFETY SWITCH

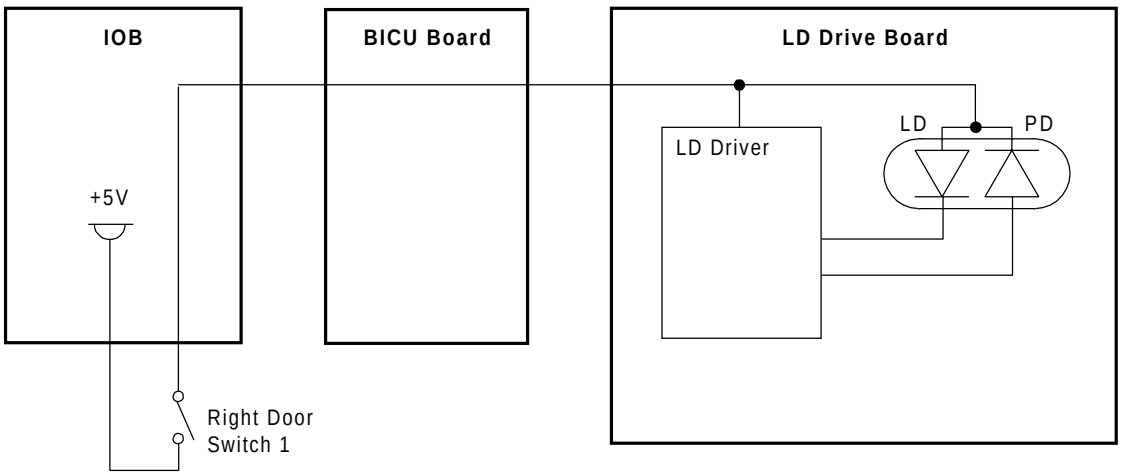

A250D555.WMF

Right Door Switch 1

To ensure that the laser beam does not inadvertently switch on during servicing, there is a safety switch inside the right door. The switch is in series on the LD 5 V line coming from the IOB through the BICU board.

Mechanical Laser Shutter

When the all-in-one cartridge is removed, the laser shutter is released and this interrupts the laser beam.

2.4 ALL-IN-ONE CARTRIDGE (AIO CARTRIDGE)

2.4.1 OVERVIEW

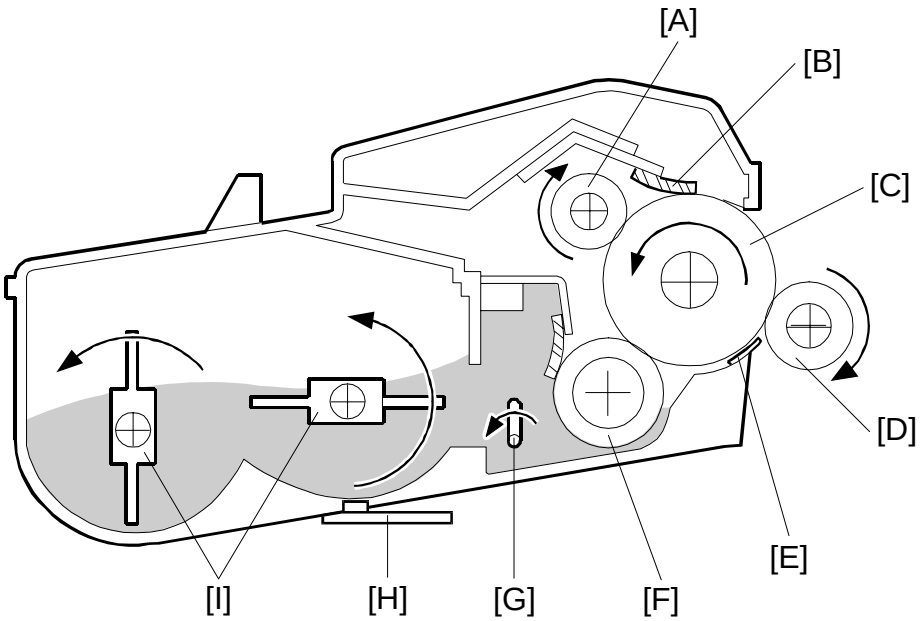

A250D509.WMF

The AIO cartridge (all-in-one cartridge) consists of the components shown above. It contains the OPC drum and the toner cassette, and includes the mechanisms for drum charge, development, and cleaning. The drum is 30 mm in diameter.

[A]: Charge roller
[B]: Cleaning blade
[C]: OPC drum
[D]: Transfer roller
[E]: Transfer blade
[F]: Development roller
[G]: Mixing blade
[H]: Toner near-end sensor
[I]: Agitator

The main motor drives the rollers in the AIO cartridge. The charge roller [A] charges the drum [C]. Monocomponent toner is used. The cleaning blade [B] cleans the drum surface.

To remove any remaining voltage on the drum surface, the laser diode periodically discharges the OPC drum. The interval can be changed with SP2-901. The default setting is every 25 pages; the machine will wait until the current job is finished.

2.4.2 DRIVE

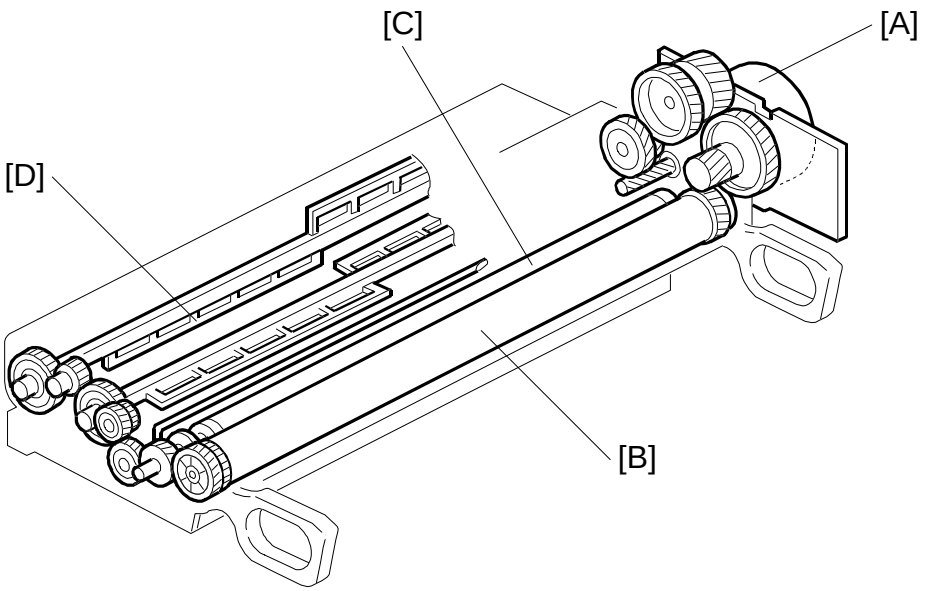

A250D510.WMF

The main motor [A] drives the drum [B], the development roller [C], and agitators [D] through a series of gears. The BICU controls the main motor speed.

2.4.3 DRUM CHARGE

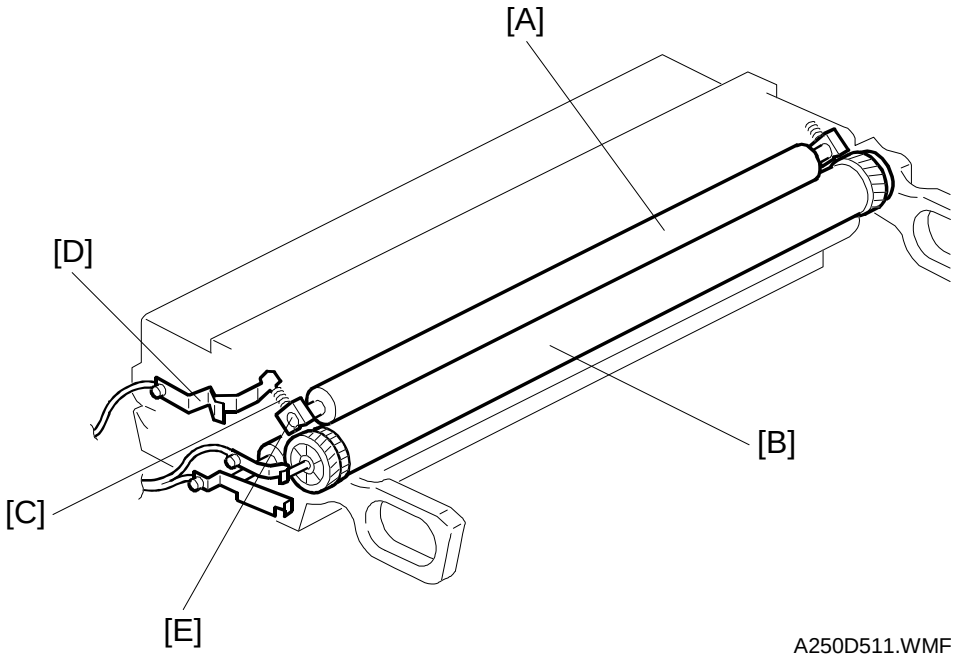

This machine uses a drum charge roller instead of a scorotron corona wire to charge the drum. The drum charge roller [A] is always in contact with the surface of the drum [B] because of the charge roller pressure springs [C], and it gives a negative charge to the drum surface. While the drum is rotating, the drum charge roller also turns because of friction between the roller and the drum.

The drum charge roller system generates less ozone than a scorotron corona wire charge. Consequently, this machine does not have an ozone filter.

The power supply board supplies a negative DC voltage to the drum charge roller through the charge roller terminal [D], pressure spring [C], and bushing [E]. This gives the drum surface a negative charge (–600 V).

The power supply board also applies AC voltage (1.6 kVp-p 1 kHz) to the charge roller. This AC removes any remaining voltage on the drum.

The AIO cartridge does not have a cleaning pad, temperature control, or a contact mechanism for the drum charge roller. The material the drum charge roller is made of enables the AIO cartridge to be a simple mechanism. The drum charge roller is part of the AIO cartridge, so when the toner runs out, the drum charge roller is changed at the same time. This happens before the drum charge roller gets dirty.

2.4.4 DEVELOPMENT

Overview

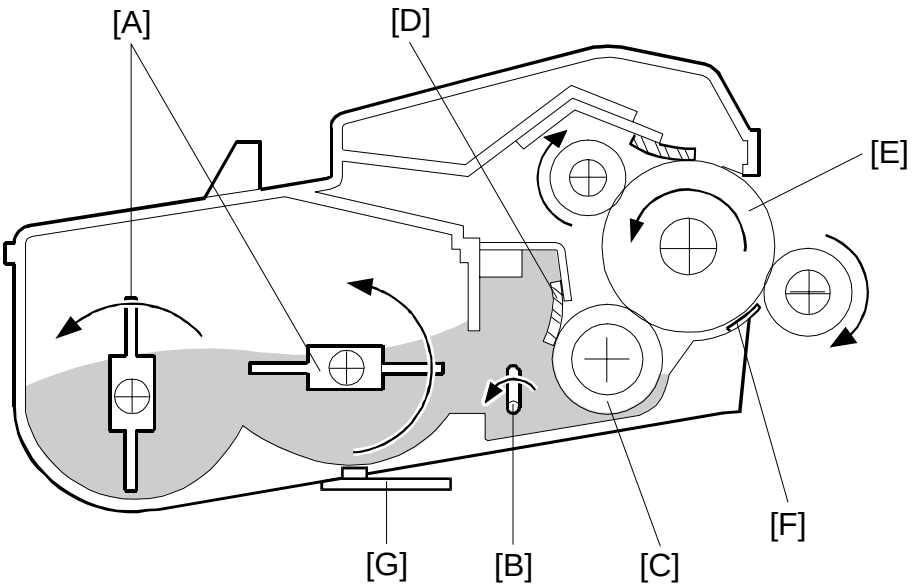

A250D509.WMF

This machine uses monocomponent toner. There are two agitators [A] in the AIO cartridge (shown above).

The agitator(s) [A] and the mixing blade [B] mix the toner in the AIO cartridge and transport it to the development roller [C]. Friction between the transported toner and the doctor blade [D] gives the toner a negative charge.

Internal permanent magnets in the development roller attract the toner to the development roller sleeve. The doctor blade trims the toner to the desired thickness on the development roller sleeve. The development roller does not contact the drum [E]. There is a small gap between the toner on the surface of the development roller sleeve and the drum. Toner jumps across this gap to develop the latent image.

The development bias consists of AC and DC components. The AC component improves the transfer of toner.

The transfer blade [F] is charged to the same voltage as the development bias. This helps to keep the toner on the drum.

The toner near-end sensor [G] is located under the toner cartridge.

Toner End Detection

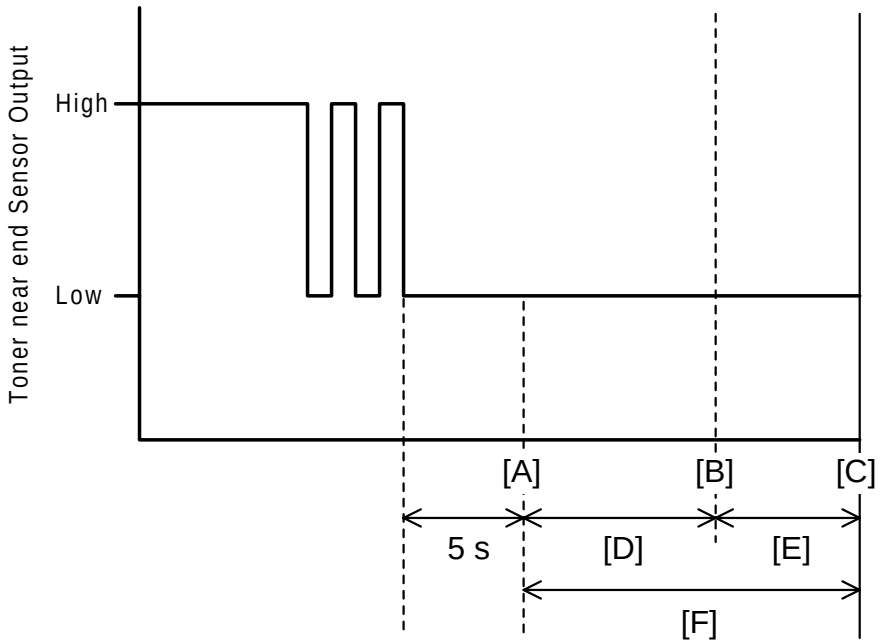

A250D666.WMF

There is no toner end sensor in this machine. Instead, toner end is detected using the toner near-end sensor.

When the toner near-end sensor detects a low toner condition for five seconds continuously [A], the machine starts the toner near-end copy counter.

From this point, toner near-end/end detection depends on the settings of SP2-213 and 2-214. The following describes what happens with the default settings.

If the toner concentration is still low after 210 copies, the machine detects a toner near-end condition [B]. The number of copies between starting the counter and toner near end [D] can be changed with SP2-214.

If the toner concentration is still too low 150 copies after toner near-end was determined, the machine detects a toner end condition [C]. If toner end is detected, the machine stops and copying/printing is disabled. The number of copies between toner near-end and toner end [E] can be changed with SP2-213.

The total number of copies between starting the copy counter and toner end [F] depends on the SP2-214 and SP2-213 settings. The default is 150 + 210 = 360 copies.

The following table shows how the two SP modes can be used to customize the toner near-end and end intervals.

SP2-213 setting (near-end to end)	SP2-214 setting (count start to near-end)		
	0: Normal	1: Low	2: High
0: 150 sheets	Start → near-end: 210 Near-end → end: 150 Total: 360	Start → near-end: 350 Near-end → end: 150 Total: 500	Start → near-end: 0 Near-end → end: 150 Total: 150
1: 50 sheets	Start → near-end: 310 Near-end → end: 50 Total: 360	Start → near-end: 450 Near-end → end: 50 Total: 500	Start → near-end: 70 Near-end → end: 50 Total: 120
2: 250 sheets	Start → near-end: 110 Near-end → end: 250 Total: 360	Start → near-end: 250 Near-end → end: 250 Total: 500	Start → near-end: 0 Near-end → end: 250 Total: 250

Notes on how to customize the settings

- A higher 'Total' means that the user can use the cartridge for longer. However, copy quality may deteriorate before the toner end warning occurs.
- With a smaller number of copies between starting the counter and near-end, the user has an earlier warning that the toner is running out.

When the toner near-end sensor has detected a high toner condition for five continuous seconds, the machine does not check for toner end/near-end condition just after the main switch is turned on, or after the right door is opened and closed. The near-end copy count continues.

If the sensor detects a high toner condition for more than 30 seconds, the machine stops the near-end copy count. The counter is then reset and the near-end or end condition is changed.

Toner Supply

The AIO cartridge agitators and mixing blade mix the toner in the AIO cartridge. The toner near-end sensor is not used to control toner supply. When the machine is turned on or the right door is closed, the agitators and the mixing blade rotate to mix the toner for a brief period.

Development Bias

The high voltage supply unit gives the development roller a charge of –400 V DC and an AC component of 1.6 kVp-p 1 kHz. To prevent toner from transferring to non-image areas on the drum, the development bias is different for image and non-image areas.

2.4.5 DRUM CLEANING

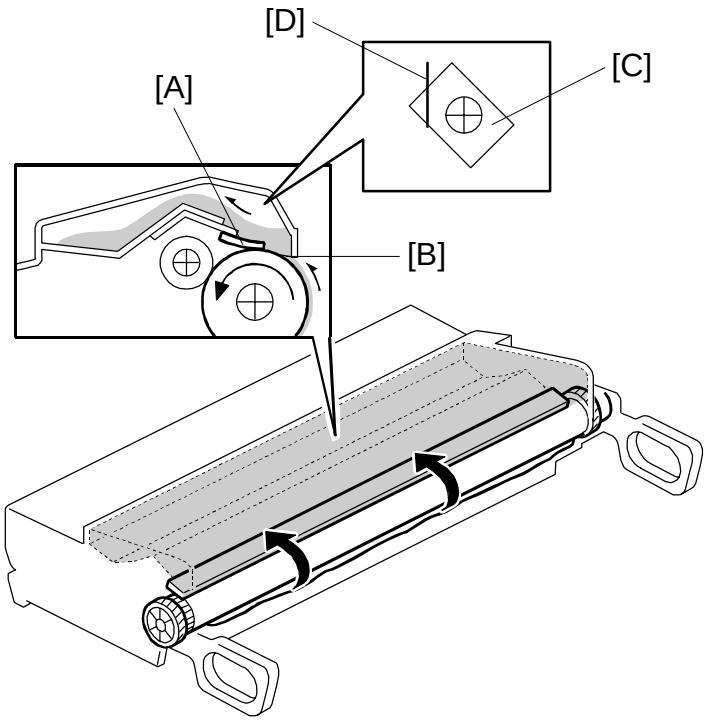

A250D512.WMF

The cleaning blade [A] removes any toner remaining on the drum after the image is transferred to the paper. The cleaning blade scrapes off the remaining toner on the drum automatically transferring it to the collection area. The mylar sheet [B] prevents the toner from dropping out of the cleaning unit.

The toner cartridge in the AIO cartridge has a toner collection coil [C] and scraper [D]. These improve the collection of waste toner.

There is no toner recycling mechanism.

2.5 IMAGE TRANSFER AND PAPER SEPARATION

2.5.1 OVERVIEW

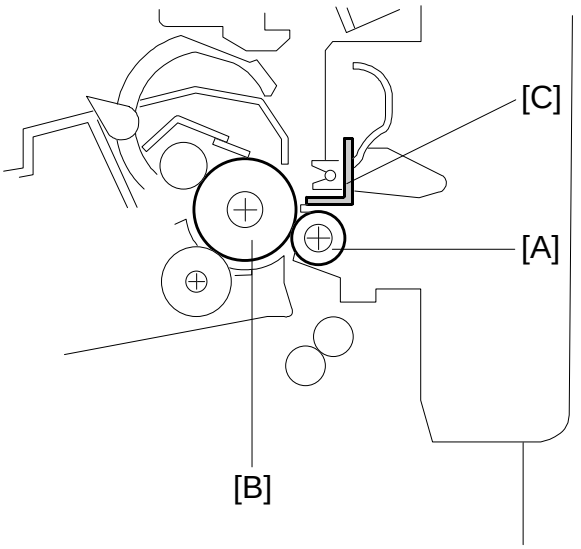

A250D513.WMF

The machine uses a transfer roller [A], which touches the surface of the drum [B]. The Power Pack - B/C/T supplies a positive current to the transfer roller, which attracts the toner from the drum onto the paper. The current depends on the paper width, paper type, and paper feed tray.

Drive from the drum through a gear turns the transfer roller. The antistatic brush [C] helps the paper to separate from the drum. The antistatic brush is grounded.

Use SP2-301 to adjust the transfer current. Note that when adjusting SP2-301-2 (by-pass tray), the transfer currents for both normal and thick paper are changed (but not the setting for “Special” paper - adjust that with SP2-301-5).

2.5.2 TRANSFER CURRENT SETTINGS

NOTE: 'Special' paper in the SP modes appears as "Dry" paper in the user tools.

Paper Size	Paper Tray		By-pass Feed		
	Normal Paper	Special Paper	Normal Paper	Thick Paper	Special Paper
A3/11" x 17", A4/8 1/2 x 11"sideways	11 μA	25 μA	12 μA	5 μA	25 μA
B4	11 μA	25 μA	13 μA	5 μA	25 μA
A4/11" x 8 1/2 lengthwise, A5/5 1/2 x 8 1/2 sidewise	11 μA	25 μA	14 μA	7 μA	25 μA
A5/8 1/2 x 5 1/2 lengthwise, A6 sideways	11 μA	25 μA	17 μA	17 μA	25 μA

Be careful when increasing the transfer current. This might cause a ghosting effect, in which part of the image at the top of the page is repeated lower down the page at a lower density. It may also damage the OPC drum in the worst case.

Notes on the 'Normal', 'Thick' , and 'Special' paper settings

The by-pass tray allows a wider range of paper thickness, and the 'Normal' setting covers paper that is thicker than allowed in the standard tray

At normal temperatures, thicker paper needs a higher current for sufficient toner transfer.

However, at low and high temperatures, image problems occur. A lower current has been found to solve these problems (use the 'Thick' setting).

- Low temperatures: Blurred image
- High temperatures: Insufficient toner transfer

To summarize:

- Normal: Normal paper; also for thick paper at normal temperatures
- Thick: Thick paper at low and high temperatures, if those image problems occur

Note that the fusing temperature increases if the 'Thick' setting is used.

Special paper

The 'Special' paper setting is for use when a high transfer current is needed, to solve certain copy quality problems. It is not normally a good idea to use a high current, for the reason stated earlier, just below the table.

2.5.3 TRANSFER ROLLER CLEANING

If the paper size is smaller than the image, or if a paper jam occurs during printing, toner may be transferred to the roller surface. To prevent the toner from transferring to the back side of the printouts, the transfer roller requires cleaning before the next printing run.

During transfer roller cleaning, the high voltage supply unit supplies a negative cleaning voltage to the transfer roller. Any negatively charged toner on the transfer roller is then transferred back to the drum. Then a positive cleaning voltage is applied to the transfer roller to push back to the drum any positively charged toner on the transfer roller.

The machine goes through the cleaning mode in the following conditions:

- After a paper jam has been cleared.
- Just after the power is switched on.
- After 10 or more sheets of paper have been copied and the copy job has finished.

SP 2-910 determines how often the transfer roller is cleaned. If this is set to 1, the transfer roller is cleaned after every job. If it is set to 0, the roller is cleaned every 10 copies (the machine waits until the end of the job).

2.6 PAPER FEED

2.6.1 OVERVIEW

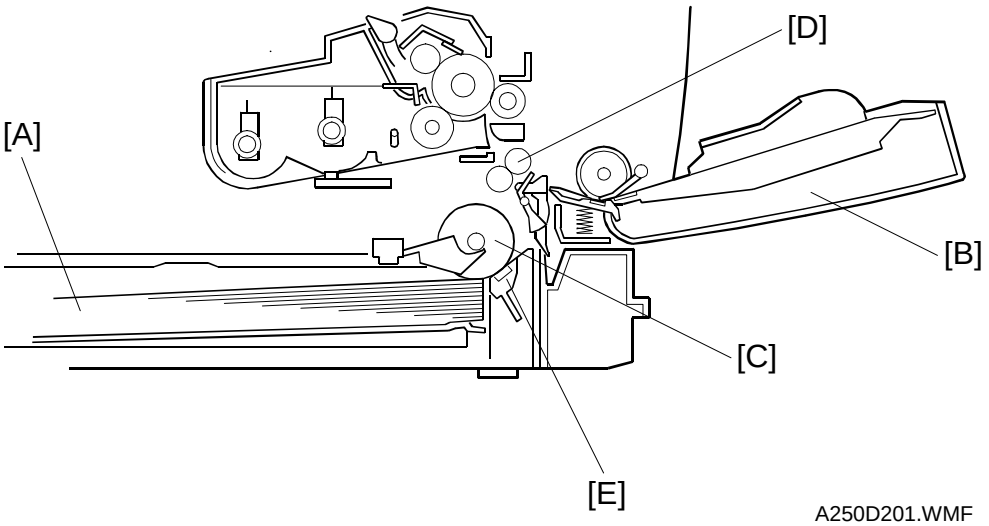

There is a built-in paper tray (tray 1) [A] and a by-pass tray [B].

The paper tray holds 250 sheets. The by-pass tray can hold 100 sheets of paper. The paper feed roller [C] drives the top sheet of paper from the paper tray to the registration rollers [D].

The paper tray has a friction pad [E] that allows only one sheet to feed at a time.

When the paper tray is closed after the paper is loaded, the paper size actuator (behind the paper size indicator located at the front right of the tray) pushes the tray paper size switch. This informs the CPU that the tray is in place and what paper size is in the tray.

2.6.2 BUILT-IN TRAY

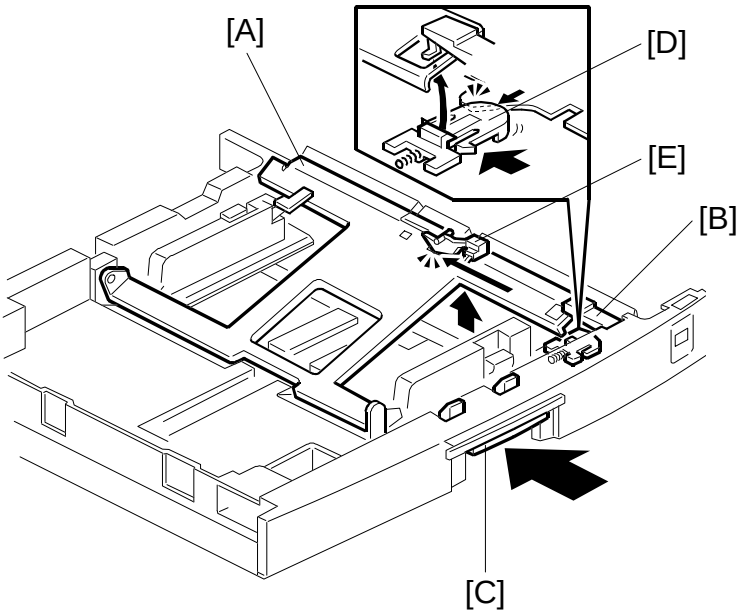

A250D104.WMF

Bottom Plate Lift

The tray bottom plate [A] is lifted by a compressed spring, and it lifts the paper to the paper feed roller.

When the cassette is being pulled out, the tray bottom plate is dropped by the cassette arm [B], which is connected to the cassette lever (handle) [C], and is locked by the stopper [D].

When the cassette is put in the machine, the stopper is released and the tray bottom plate moves up.

Paper End Detection

When the paper tray runs out of paper, the actuator for the paper end sensor [E] drops into the cutout in the tray bottom plate, activating the paper end sensor.

The paper near end sensor is on the machine frame above the back right corner of the cassette tray. The sensor is only used in printer mode.

Paper Feed Drive

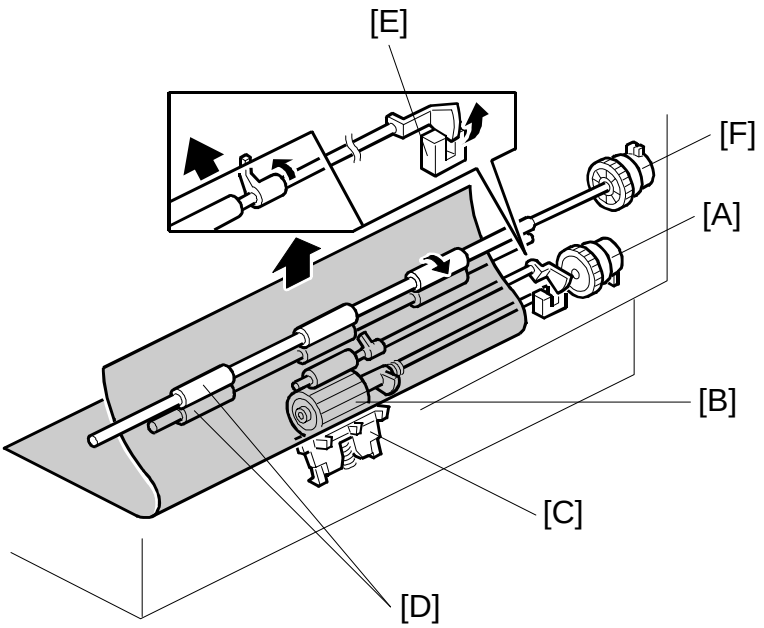

A250D518.WMF

The main motor drives the pick-up and feed mechanism. The tray paper feed clutch [A] transfers drive from the main motor to the paper feed roller [B].

This machine uses a feed roller and friction pad mechanism. The friction pad [C] only allows the top sheet to feed. Therefore, during paper feed, the top sheet of paper is separated from the stack and fed to the registration rollers [D].

When the paper actuates the registration sensor [E], the tray paper feed clutch turns off. When the paper reaches a certain position, the registration clutch [F] turns on to transfer drive from the main motor to the registration rollers. Then the registration rollers feed the paper to the image transfer area.

Paper Size Detection

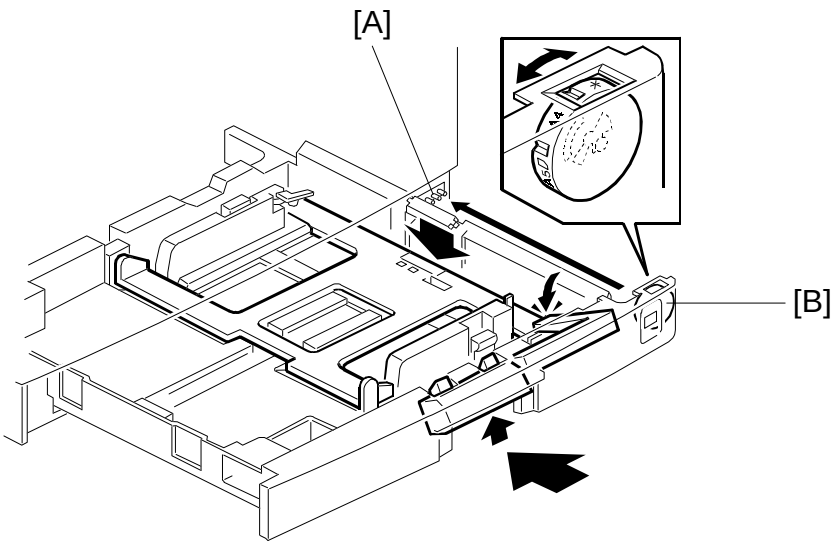

A250D108.WMF

The paper size switch [A] includes three sensors (microswitches). Actuators on a dial [B] behind the paper size indicator plate actuate the sensors.

Each paper size has its own actuator, with a unique combination of notches. To determine the paper size, the CPU reads which switches the actuator has turned off.

The CPU disables paper feed from a tray if the paper size cannot be detected. If the paper size actuator is broken, or if there is no tray installed, the printer control board recognizes that the paper tray is not installed.

When the paper size actuator is at the "✱" mark, the paper tray can be set up to accommodate one of a wider range of paper sizes by using a user tool at the machine's operation panel.

Models		Switch Location		
North America	**Europe**	**Left**	**Center**	**Right**
8 1/2" x 14"	A5	OFF	OFF	ON
A4	A4	ON	OFF	OFF
8 1/2" x 11"	A4	ON	ON	OFF
✱	✱	OFF	ON	ON
8 1/2" x 13"	8 1/2" x 13"	ON	ON	OFF
8 1/2" x 11"	8 1/2" x 11"	ON	OFF	ON
11" x 17"	A3	ON	ON	ON

ON: Pushed OFF: Not Pushed

2.6.3 BY-PASS TRAY

Drive

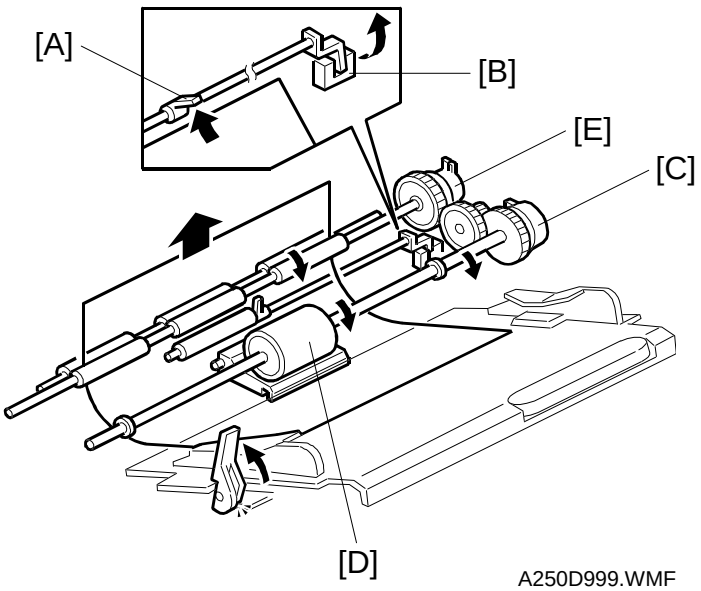

When paper is placed on the tray, the by-pass tray paper feeler [A] is pushed up and the actuator leaves the by-pass tray paper sensor [B].

The by-pass tray paper feed clutch [C] transfers drive from the main motor to the by-pass feed roller [D].

This machine uses a feed roller and friction pad mechanism, with drive from the main motor transmitted when the by-pass feed clutch turns on. The friction pad only allows the top sheet to feed to the registration rollers.

When the paper leading edge activates the registration sensor, the registration clutch [E] turns on.

Paper Size Detection

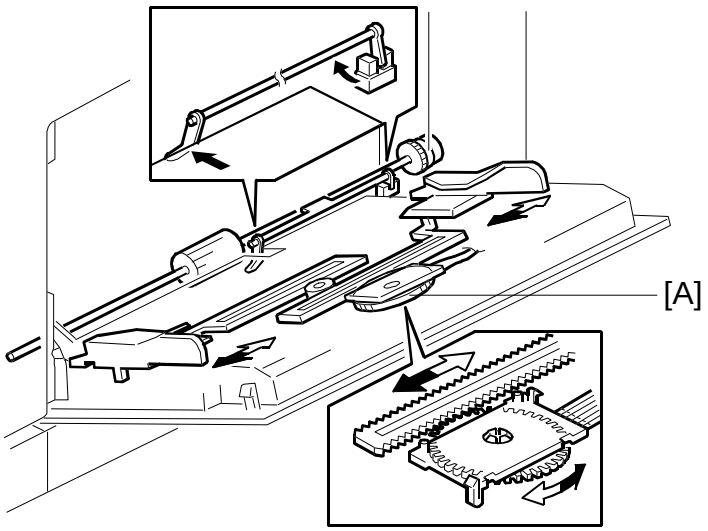

A250D107.WMF

The by-pass feed paper width sensor monitors the paper width. The side fence is connected to the terminal plate gear. When the side fences move to match the paper width, the circular terminal plate rotates over the wiring patterns on the rectangular part of the width sensor. The patterns for each paper width on the paper width detection sensor are unique.

North America

CN No. (IOB)	DLT	LG	8" x 13"	HLTR
CN 321-1	H	H	L	L
CN 321-2	H	H	H	H
CN 321-3 (GND)	L	L	L	L
CN 321-4	L	H	H	H
CN 321-5	L or H	L	L	H

Europe

CN No. (IOB)	A3	B4	A4R	8" x 13"	A5R
CN 321-1	H	H	H	L	L
CN 321-2	H	H	H	H	H
CN 321-3 (GND)	L	L	L	L	L
CN 321-4	L	L	H	H	H
CN 321-5	H	L	L	L	H

2.6.4 PAPER REGISTRATION

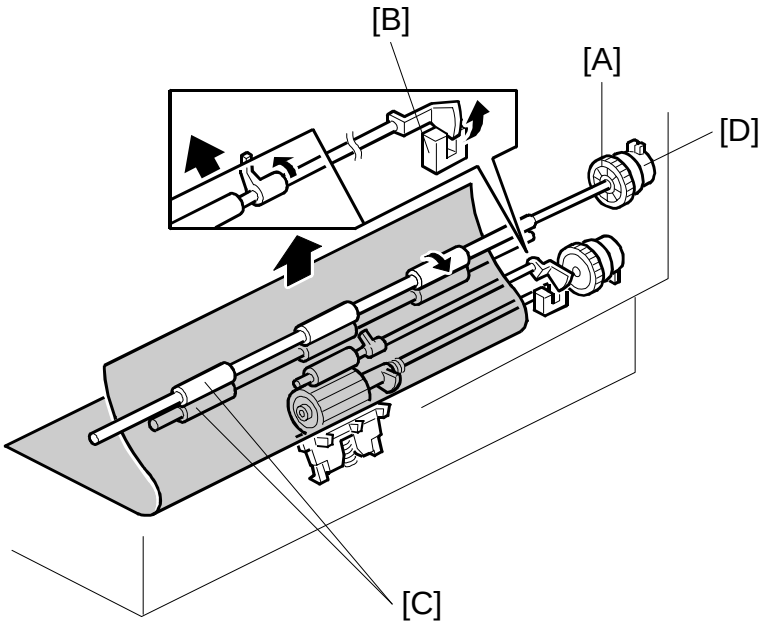

A250D518.WMF

Main motor rotation is transmitted to the registration clutch gear [A].

The registration sensor [B] is just before the registration rollers [C].

When the paper leading edge activates the registration sensor, the registration clutch [D] turns on and the registration rollers start turning a little bit afterward. However, the tray paper feed roller clutch stays on for a bit longer. This delay allows time for the paper to press against the registration rollers and buckle slightly to correct skew. Use SP1-003 to adjust the amount of paper buckle.

The registration clutch then energizes at the proper time to align the paper with the image on the drum. The registration rollers feed the paper to the image transfer area.

The registration sensor is also used for paper misfeed detection.

2.6.5 MISFEED DETECTION

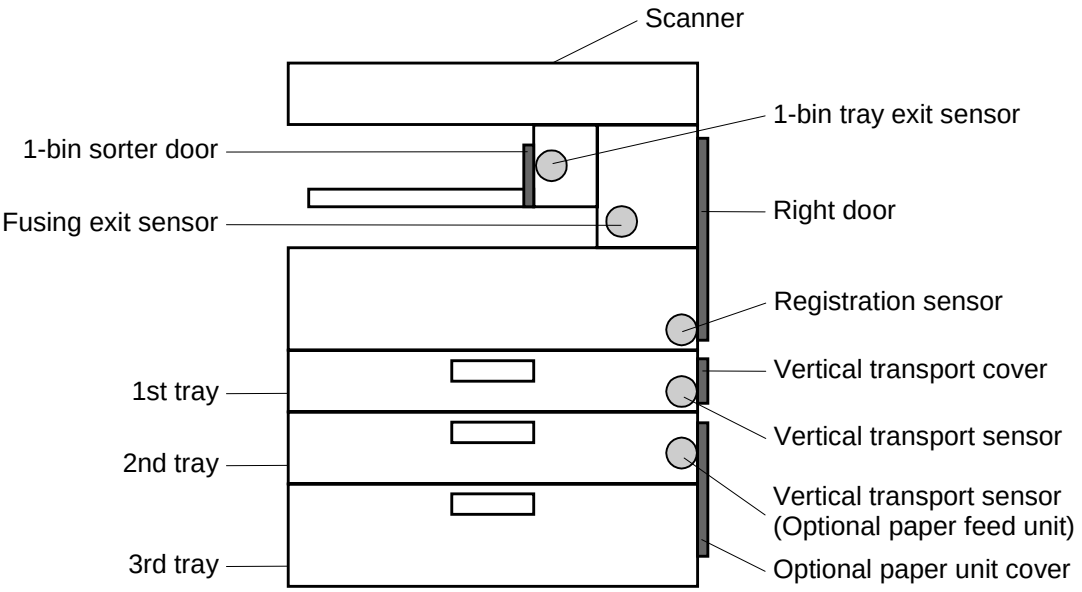

A250D603.WMF

Misfeed	Operation panel	Vertical transport cover	Right cover	Optional paper unit	1 bin sorter door
Registration sensor ON check (By-pass feed, 1st tray)	A	✔			
Registration sensor OFF check	B	✔	✔		
Paper stuck at the registration sensor	B	✔	✔		
Fusing exit sensor ON check	C	✔			
Fusing exit sensor OFF check	C	✔			
Paper stuck at the fusing exit sensor	C	✔			
Registration sensor ON check (2nd, 3rd tray)	Y1		✔	✔	
Vertical transport sensor OFF check (when feeding from the 2nd tray)	Y1		✔	✔	
Vertical transport sensor ON check (when feeding from the 2nd tray)	Y1		✔	✔	
Paper stuck at the vertical transport sensor	Y1		✔	✔	
Vertical transport sensor OFF check (when feeding from the 3rd tray)	Y2		✔	✔	
Vertical transport sensor ON check (when feeding from the 3rd tray)	Y2		✔	✔	
Vertical transport sensor (optional PFU) OFF check	Y2		✔	✔	
Vertical transport sensor (optional PFU) ON check	Y2		✔	✔	
Paper stuck at the optional paper sensor	Y2		✔	✔	
Exit tray paper sensor ON check	R				✔
Exit tray paper sensor OFF check	R				✔
Paper stuck at the exit tray paper sensor	R				✔

Y1: Y jam displayed and the 2nd tray LED blinks
Y2: Y jam displayed and the 3rd tray LED blinks

✔: Open this cover to clear the jam

Registration sensor ON check

When the registration sensor does not turn on within a certain time after the paper feed clutch turns on (1st tray: 2.0 s, 2nd tray: 1.3 s, 3rd tray: 1.7 s).

Registration sensor OFF check

During multi-page printing, the registration sensor is not turned off by the trailing edge of the current page after the paper feed clutch turns on to feed the next page.

After the registration sensor turns on, it does not turn off within 0.8 seconds after the expected time, which is calculated from the paper length.

Fusing exit sensor ON check

When the fusing exit sensor does not turn on within 2.5 seconds after the registration clutch turns on.

Fusing exit sensor OFF check

During multi-page printing, the fusing exit sensor is not turned off by the trailing edge of the previous page after the designated time.

The fusing exit sensor does not turn off within 0.9 seconds after the sensor-off time occurs. This time is calculated from the paper length.

Vertical transport sensor ON check

When the vertical transport sensor does not turn on within 1.5 seconds after the 2nd paper feed clutch turns on.

Vertical transport sensor OFF check

When the vertical transport sensor does not turn on within 1.8 seconds after the vertical transport sensor (optional PFU) turns on.

Vertical transport sensor (optional PFU) ON check

When the vertical transport sensor (optional PFU) does not turn on within 1.5 seconds after the 3rd paper feed clutch turns on.

Vertical transport sensor (optional PFU) OFF check

During multi-page printing, the vertical transport sensor (optional PFU) is not turned off by the trailing edge of the previous page after the designated time.

1 bin tray exit sensor ON check

When the 1 bin tray exit sensor does not turn on within 1.8 seconds after the fusing exit sensor turns on.

1 bin tray exit sensor OFF check

During multi-page printing, the 1-bin tray exit sensor is not turn off by the trailing edge of the previous page after the designated time.

The sensor does not turn off within 1.0 seconds after the sensor-off time occurs. This time is calculated from the paper length.

2.7 IMAGE FUSING

2.7.1 OVERVIEW

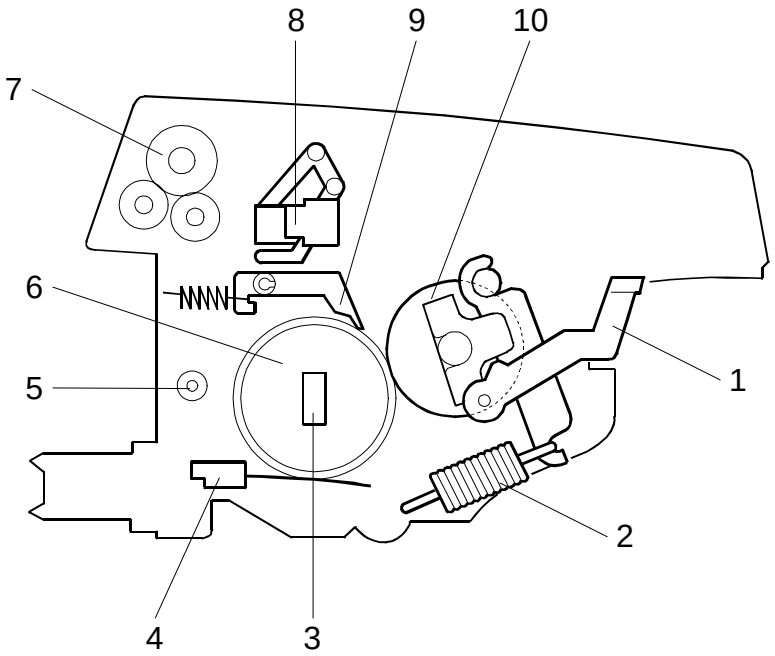

A250D508.WMF

The fusing unit consists of the following parts.

1. Pressure Roller Release Lever
2. Pressure Spring
3. Fusing Lamp
4. Fusing Thermistor
5. Thermofuse
6. Hot Roller
7. Exit Roller
8. Fusing Exit Sensor
9. Hot Roller Strippers
10. Pressure Roller

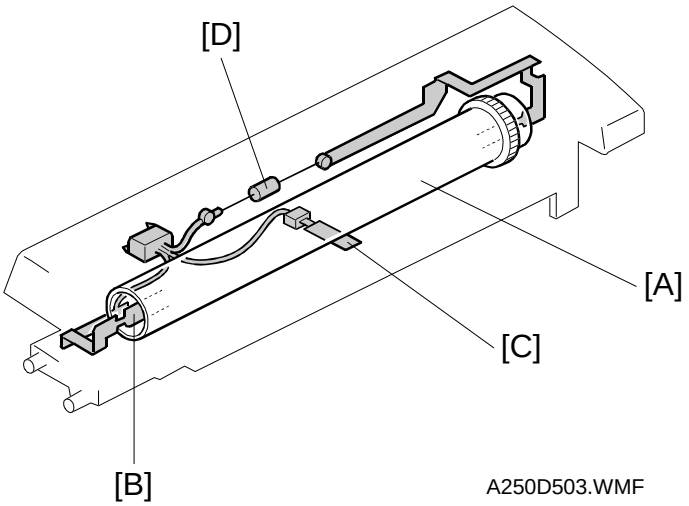

After the image has been transferred, the paper enters the fusing unit. The image is fused to the paper by applying heat and pressure through the combined use of the hot roller [A], fusing lamp [B], and pressure roller.

The CPU monitors the hot roller temperature through the fusing thermistor [C], which is in contact with the hot roller surface. The thermofuse [D] protects the fusing unit from overheating.

2.7.2 FUSING UNIT DRIVE

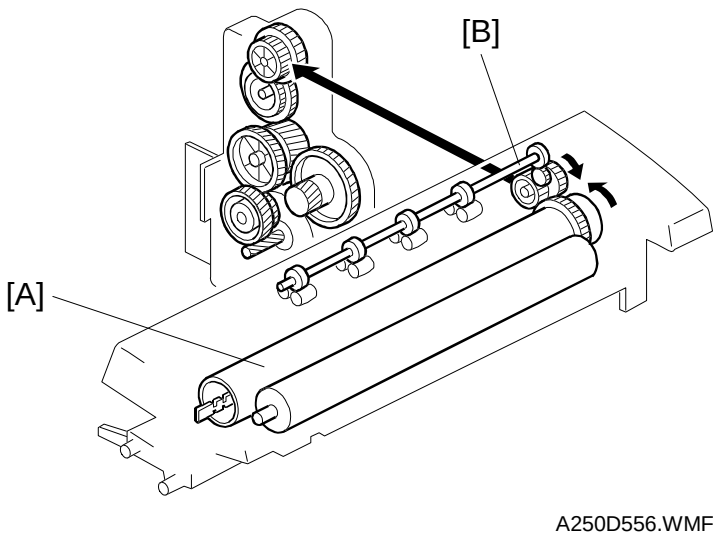

The main motor drives the hot roller [A] through a train of gears.

The hot roller drives the exit roller [B] through a gear.

2.7.3 PRESSURE ROLLER/PAPER EXIT

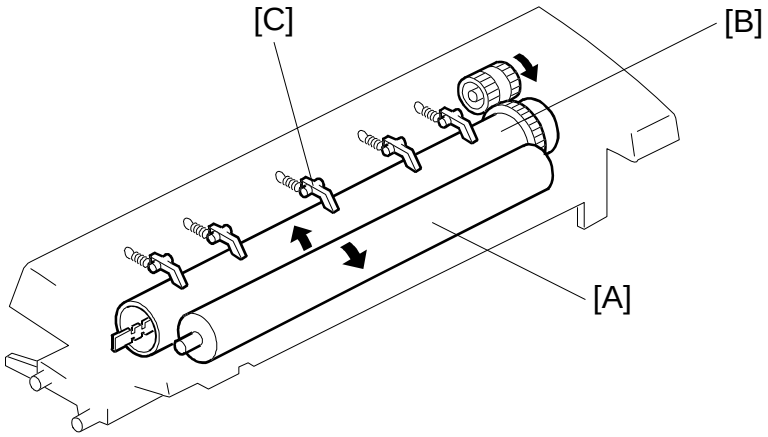

A250D505.WMF

During printing, the pressure roller [A] is pressed against the hot roller [B] by springs.

The hot roller strippers [C] separate the paper from the hot roller and direct it to the exit roller. Then the exit roller feeds the paper to the paper tray.

2.7.4 FUSING UNIT DRIVE RELEASE

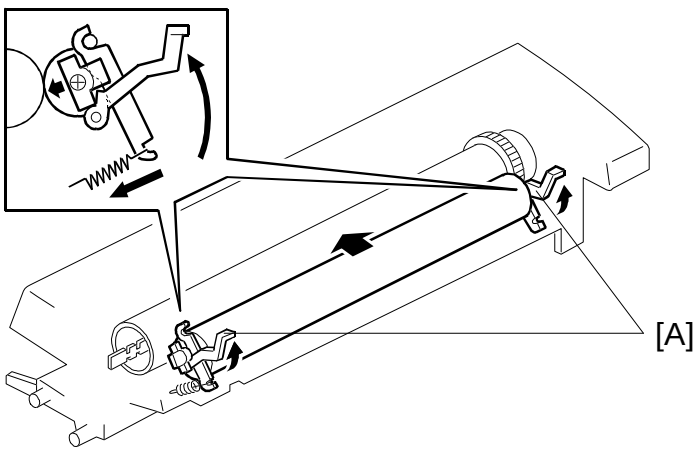

A250D331.WMF

When the pressure roller release levers [A] are pushed down, the pressure roller moves away so jammed paper can be removed.

2.7.5 FUSING TEMPERATURE CONTROL

Overview

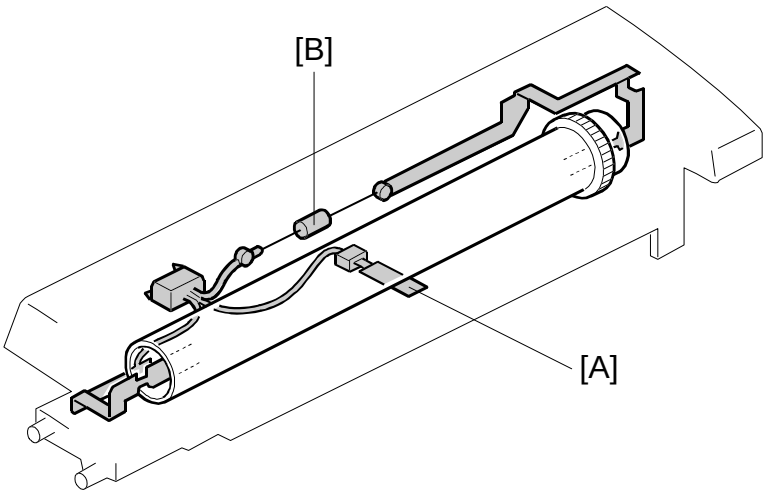

A250D328.WMF

The fusing temperature is controlled using the fusing thermistor [A].

The CPU checks the output from the fusing thermistor once a second. The CPU compares the current and previous temperature, then decides the power-on ratio for the next second. To maintain the target temperature, the CPU controls the fusing lamp power-on ratio as shown in the following table (the temperature control algorithm only works with whole numbers).

Initializing

Sampling cycle: 1 second
Soft start setting: 6 cycles

	Current minus Target				
Previous minus Current	**-3°C or more**	**–2°C or –1°C**	**0**	**+1°C or +2°C**	**+3°C or more**
-3°C or more	100%	50%	0%	0%	0%
–2°C or –1°C	100%	50%	0%	0%	0%
0	100%	50%	0%	0%	0%
+1°C or +2°C	100%	50%	0%	0%	0%
+3°C or more	100%	50%	0%	0%	0%

Ratio (%): The proportion of time that the fusing lamp power is on

Copying (North America Model)

Sampling cycle: 1 second
Soft start setting: 6 cycles

	Current minus Target				
Previous minus Current	**-3°C or more**	**–2°C or –1°C**	**0**	**+1°C or +2°C**	**+3°C or more**
-3°C or more	100%	100%	100%	100%	0%
–2°C or –1°C	100%	70%	70%	70%	0%
0	100%	50%	30%	30%	0%
+1°C or +2°C	100%	30%	0%	0%	0%
+3°C or more	100%	0%	0%	0%	0%

Ratio (%): The proportion of time that the fusing lamp power is on

Copying (Europe Model)

Sampling cycle: 1 second
Soft start setting: 10 cycles

	Current minus Target				
Previous minus Current	**-3°C or more**	**–2°C or –1°C**	**0**	**+1°C or +2°C**	**+3°C or more**
-3°C or more	100%	100%	100%	0%	0%
–2°C or –1°C	100%	100%	100%	0%	0%
0	100%	100%	100%	0%	0%
+1°C or +2°C	100%	100%	100%	100%	0%
+3°C or more	100%	100%	100%	100%	0%

Ratio (%): The proportion of time that the fusing lamp power is on

Standby

Sampling cycle: 1 second (Europe model: 3 seconds)
Soft start setting: 6 cycles (Europe model: 20 cycles)

	Current minus Target				
Previous minus Current	**-3°C or more**	**–2°C or –1°C**	**0**	**+1°C or +2°C**	**+3°C or more**
-3°C or more	100%	100%	0%	0%	0%
–2°C or –1°C	100%	100%	0%	0%	0%
0	100%	100%	0%	0%	0%
+1°C or +2°C	100%	100%	100%	0%	0%
+3°C or more	100%	100%	100%	0%	0%

Ratio (%): The proportion of time that the fusing lamp power is on

Fluorescent Lamp Flicker

Starting and stopping the fusing lamp power every second causes fluorescent lighting in the room to flicker. To reduce this flickering, use SP1-108 to change the cycle from 1 second to 3 seconds.

In addition, full power is applied to the fusing lamp gradually, not all at once. This prevents the power in the room from dropping suddenly. This feature is known as “Soft Start”. The machine does this by gradually allowing more power to the fusing lamp over a number of zero-cross cycles of the ac supply. The diagram below shows full power being applied gradually over the duration of 6 zero-cross cycles. With SP1-107, this number can be set to 6, 10, or 20.

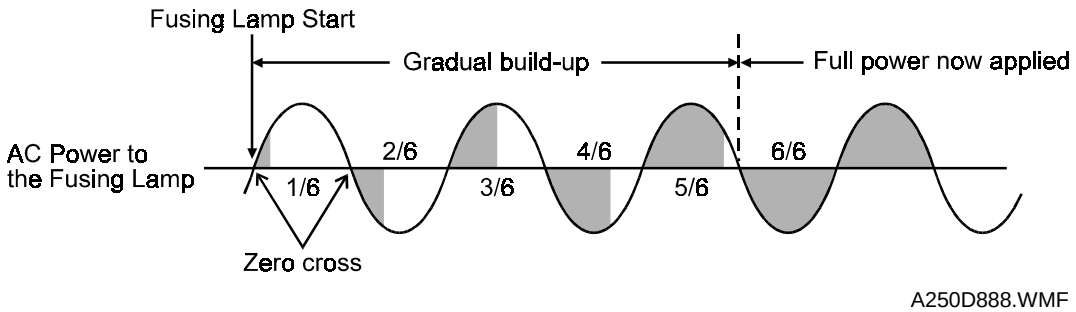

Fusing Temperature Control for Thick Paper at the By-pass Tray

When thick paper mode is selected, the machine changes the target fusing temperature from 180°C to 190°C.

This also happens when the machine detects A6 size. This is because the machine automatically assumes that the A6 paper is a post card, and post cards should be treated as thick paper.

Pre-heat Mode (Fusing Idling)

When the machine is powered on, or the right door is closed, the hot roller turns for 10 seconds.

If the SP1-103 setting is 1 (Yes), when the fusing thermistor detects a temperature lower than 60°C, the hot roller turns for 60 seconds (instead of for just 10 s) after the machine is powered on, or the right door is closed. This maintains conditions for fusing copies made on thick paper during cold weather conditions.

To Prevent Offset when Making Multiple Copies on Small Paper

This prevents the temperature at the ends of the hot roller from being higher than at the center.

If the smallest copy paper width detected during a one-minute interval is less than 220 mm, the machine lowers the target fusing temperature by 10°C.

Then, during the next minute, if the smallest width detected is less than 220 mm again, the machine lowers the target temperature by another 5°C.

2.7.6 OVERHEAT PROTECTION

If the hot roller temperature becomes greater than 230°C for more than 1 second, the CPU cuts off the power to the fusing lamp. At this time, the LCD will display an SC543 error.

Even if the thermistor overheat protection fails, there is a thermofuse in series with the common ground line of the fusing lamp. If the temperature of the thermofuse reaches 169°C, the thermofuse opens, removing power from the fusing lamp. At this time, the printer stops.

2.7.7 ENERGY SAVER MODE

When the machine is not being used, the energy saver function reduces power consumption by decreasing the fusing unit temperature.

Entering Energy Saver Mode and Auto Shut Off Mode

Energy saver mode starts after the machine has been idle for a certain time. The user specifies this time. The following choices are available.

- Off (energy saver mode never activates)
- 1 minutes to 240 minutes

This feature is adjusted using the user tools at the operation panel. Then, when the Auto Off timer (SP5-904, or a user tool setting) runs out, the machine turns off the main power switch.

Auto Shut Off mode can be disabled with a user tool (System Settings - 10. AOF).

Copier

Mode	Main Switch	Energy Saver LED	Fusing Lamp	System +5 V	Note
Energy Saver Level 1	On	On	140°C	On	The machine returns to standby mode if the ADF/Platen is lifted or an original is placed in the ADF.
Energy Saver Level 2	On	On	80°C	On	
Auto Shut Off Mode	Off	Off	Off	Off	The machine returns to standby mode only if the main switch is turned on.

Fax, Printer

Mode	Main Switch	Energy Saver LED	Fusing Lamp	System +5 V	Note
Energy Saver Level 1	On	On	140°C	On	The machine returns to standby mode if the ADF/Platen is lifted or an original is placed in the ADF.
Energy Saver Level 2	On	On	80°C	On	
Auto Shut Off Mode	On	Off	Off	On	The machine returns to standby mode only if the operation switch is turned on.

Returning to Standby Mode

From Energy Saver Level 1 or 2

If one of the following is done, the machine returns to standby mode.

- Pressing the Energy Saver key
- Opening and closing the tray cover
- Placing an original in the ADF
- Lifting up the ADF

From Auto Shut Off Mode

The machine returns to the ready condition when the main switch is turned back on.

3. INSTALLATION

⚠CAUTION

Before installing options, do the following:

1. **If there is a fax unit in the machine, print out all messages stored in the memory, the lists of user-programmed items, and the system parameter list.**
2. **If there is a printer option in the machine, print out all data in the printer buffer.**
3. **Turn off the main switch and disconnect the power cord, the telephone line, and the network cable.**

3.1 INSTALLATION REQUIREMENTS

3.1.1 ENVIRONMENT

- Temperature and Humidity Chart -

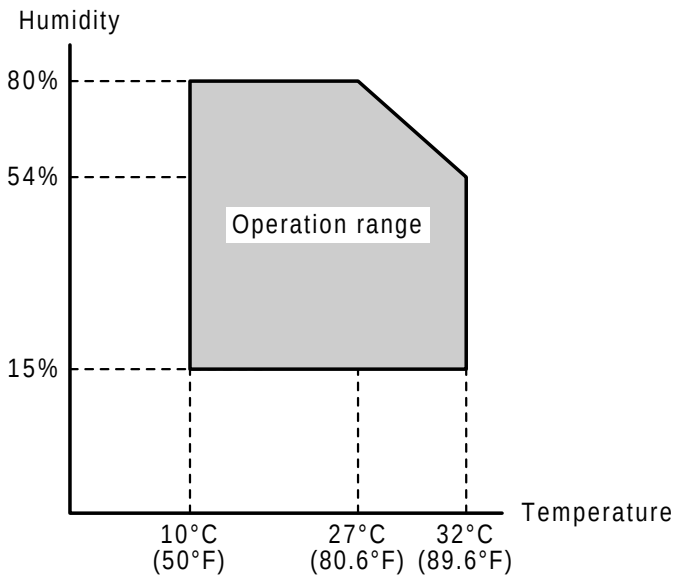

A250I502.WMF

1. Temperature Range: 10°C to 32°C (50°F to 89.6°F)
2. Humidity Range: 15% to 80% RH

3. Ambient Illumination: Less than 1,500 lux (do not expose to direct sunlight.)
4. Ventilation: Room air should turn over at least 30 m^3/hr/person
5. Ambient Dust: Less than 0.10 mg/m^3 (2.7 x 10^{-6} oz/yd^3)
6. Avoid areas exposed to sudden temperature changes. This includes:
   1) Direct exposure to cool air from an air conditioner.
   2) Direct exposure to heat from a heater.
7. Do not place the machine in an area where there are corrosive gasses.
8. Do not install the machine at any location over 2,000 m (6,500 ft.) above sea level.
9. Place the copier on a strong and level base. (Inclination on any side should be no more than 5 mm.)
10. Do not place the machine where it may experience strong vibrations.

3.1.2 MACHINE LEVEL

1. Front to back: Within 5 mm (0.2") of level
2. Right to left: Within 5 mm (0.2") of level

3.1.3 MINIMUM SPACE REQUIREMENTS

Place the copier near the power source, providing clearance as shown:

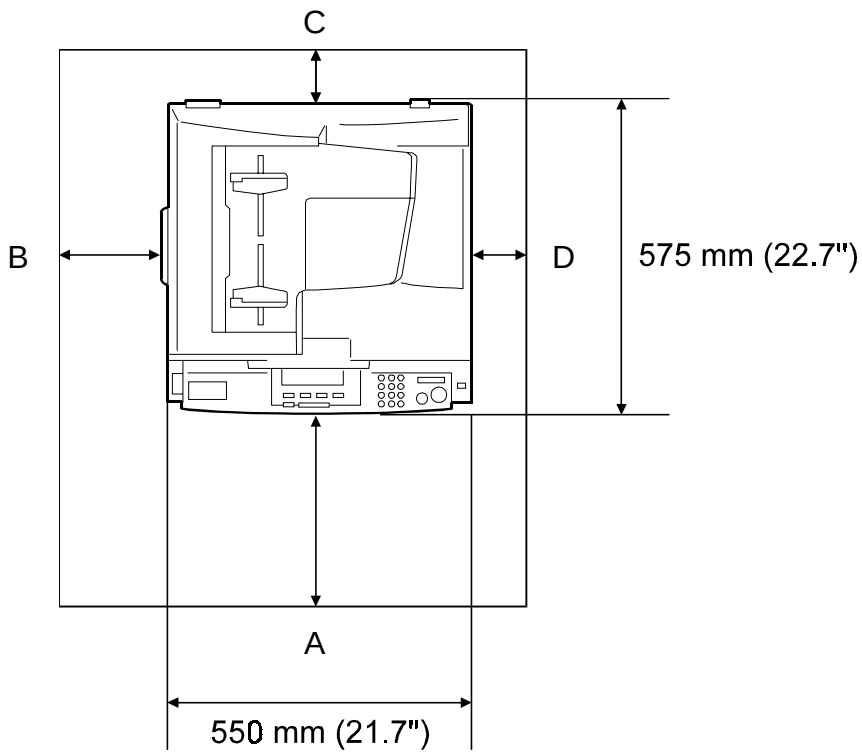

A250I145.WMF

A: In front : Over 750 mm (29.6") C: To rear: Over 10 mm (0.4")

B: Left: Over 20 mm (0.8") D: Right: Over 10 mm (0.4")

NOTE: 1) The 750 mm recommended for the front space is for pulling out the paper tray only. If an operator stands in front of the copier, more space is clearly necessary.
2) The 20 mm recommended for the left space is when the user does not use A3/11" x 17" paper . If a user uses A3/11" x 17" paper with optional 1-bin sorter, more than 60 mm of space is necessary.
3) The 10 mm recommended for the right space is for installation only. If an operator fixes a paper jam, uses the by-pass tray, or changes the AIO, more space is necessary.

3.1.4 POWER REQUIREMENTS

CAUTION: 1) Make sure that the wall outlet is near the copier and easily accessible. Make sure the plug is inserted firmly in the outlet.
2) Avoid multi-wiring.
3) Be sure to ground the machine.

1. Input voltage level:

120 V, 60 Hz:	More than 10 A (North America)
220 ~ 240 V, 50/60 Hz:	More than 6 A (Europe/Asia)
110 V, 50/60 Hz:	More than 11 A (Taiwan)

3.2 COPIER INSTALLATION

3.2.1 ACCESSORY CHECK

Check the quantity and condition of the accessories in the box against the following list:

Description	Quantity
1. Operation Instructions - System Setting	1
2. Operation Instructions - Copy Reference	1
3. Operation Instructions - Copy Quick Guide	1
4. User Survey Card (-17 machine)	1
5. NECR - English (-17 machine)	1
6. NECR - Multi-language (-19, -27, -29, -69)	1
7. Model Name Decal (-10, -15, -22)	1

3.2.2 COPIER INSTALLATION PROCEDURE

⚠CAUTION

Rating voltage for peripherals

Make sure to plug the cables into the correct sockets.

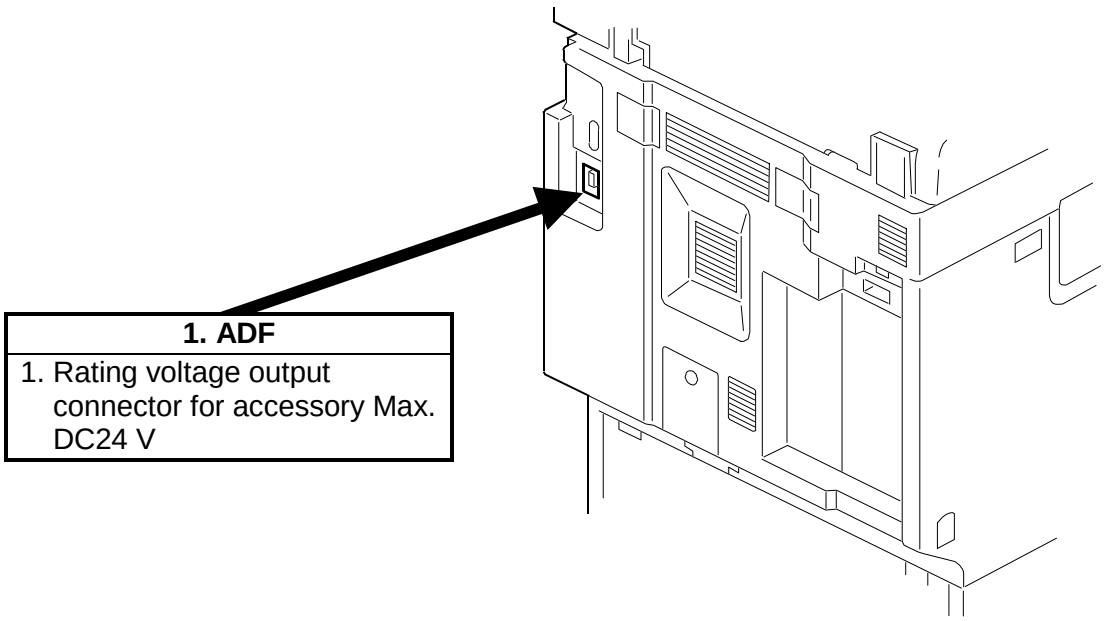

1. ADF
1. Rating voltage output connector for accessory Max. DC24 V

A250I209.WMF

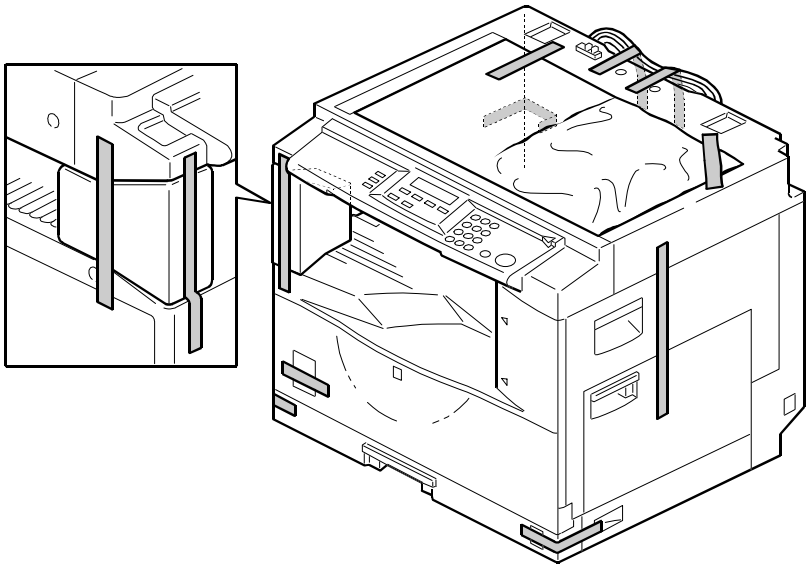

A250I210.WMF

NOTE: Since the installation procedure is not a copier accessory, always bring this manual with you.

⚠CAUTION

When installing the copier, make sure to keep the power cord unplugged.

1. Remove the tape strips.

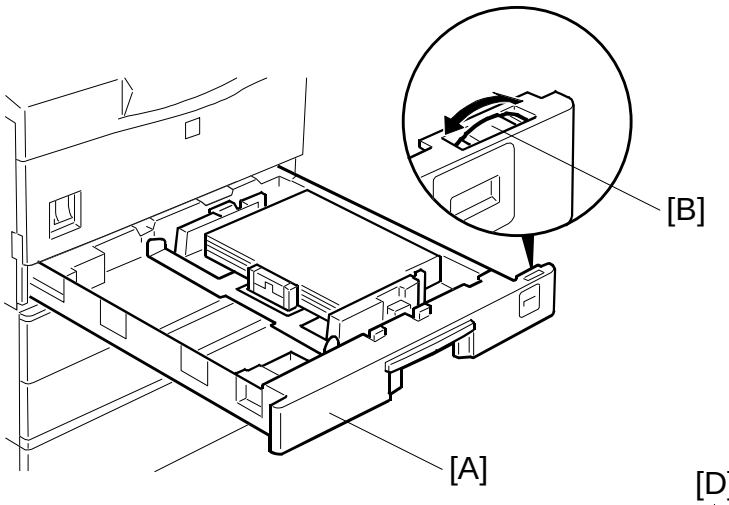

A250I501.WMF

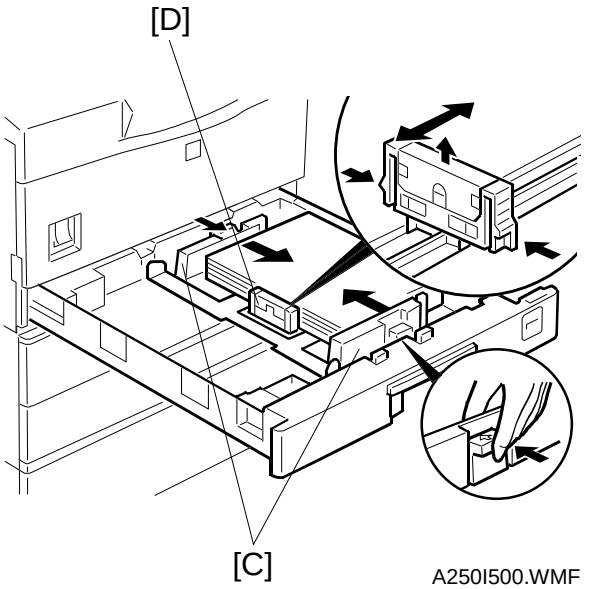

A250I500.WMF

2. Pull the paper tray [A] out and turn the paper size dial [B] to select the appropriate size. Adjust the side guides [C] and end guide [D] to match the paper size.

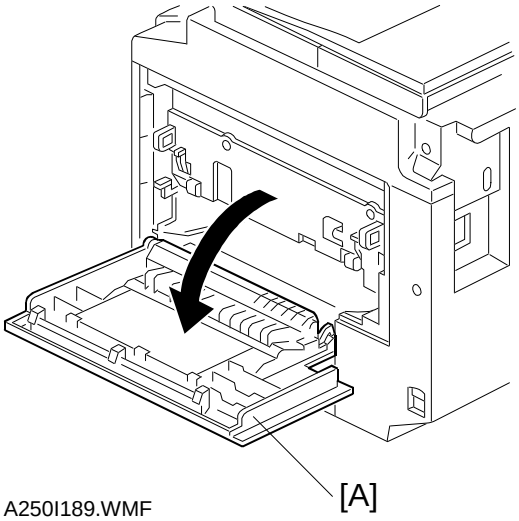

A250I189.WMF

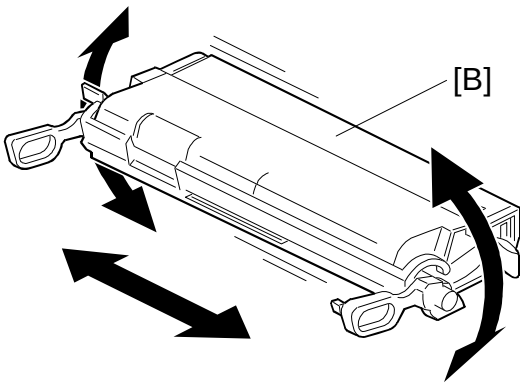

A250I190.WMF

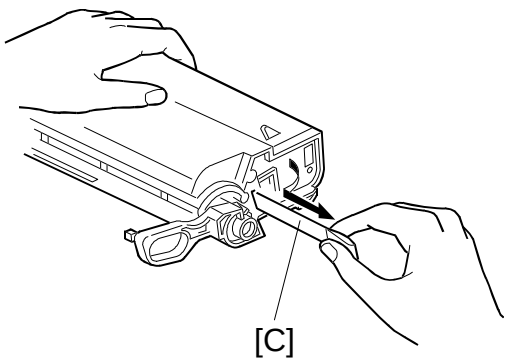

A250I191.WMF

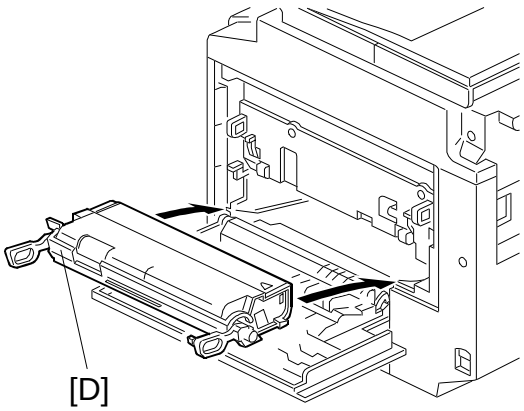

A250I192.WMF

3. Open the right door [A].
4. Shake the toner cartridge [B] well several times.
5. Pull out horizontally and remove the tape [C] inside the toner cartridge, as shown.
6. Install the toner cartridge [D] in the copier.
7. Close the right door.
8. Install the ADF (refer to ADF Installation, section 3.3) or platen cover (refer to Platen Cover Installation, section 3.7).
9. Turn the operation and main switches on, and check the copy quality and copying functions.
10. Initialize the electrical total counter using SP7-825.

3.3 ADF INSTALLATION

3.3.1 ACCESSORY CHECK

Check the quantity and condition of the accessories in the box against the following list:

Description	Quantity
1. Stepped Screw	2
2. Knob Screw	2
3. Driver Tool	1
4. DF Exposure Glass	1
5. Decal - Exposure Glass	1
6. Decal - Scale - mm	1
7. Decal - Scale - inch	1
8. Scale Guide	1
9. Installation Procedure	1

3.3.2 ADF INSTALLATION PROCEDURE

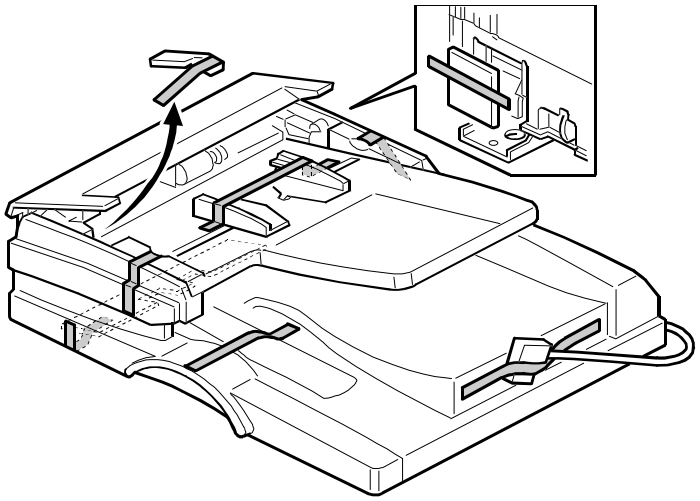

A859I101.WMF

1. Remove the strips of tape.

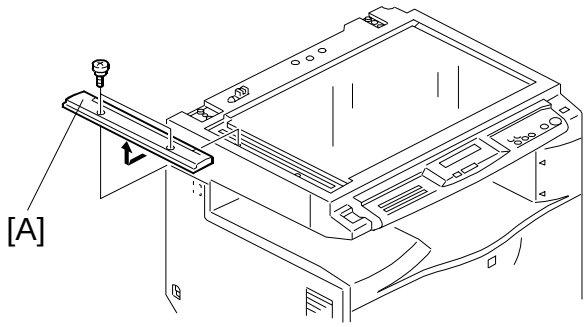

A859I111.WMF

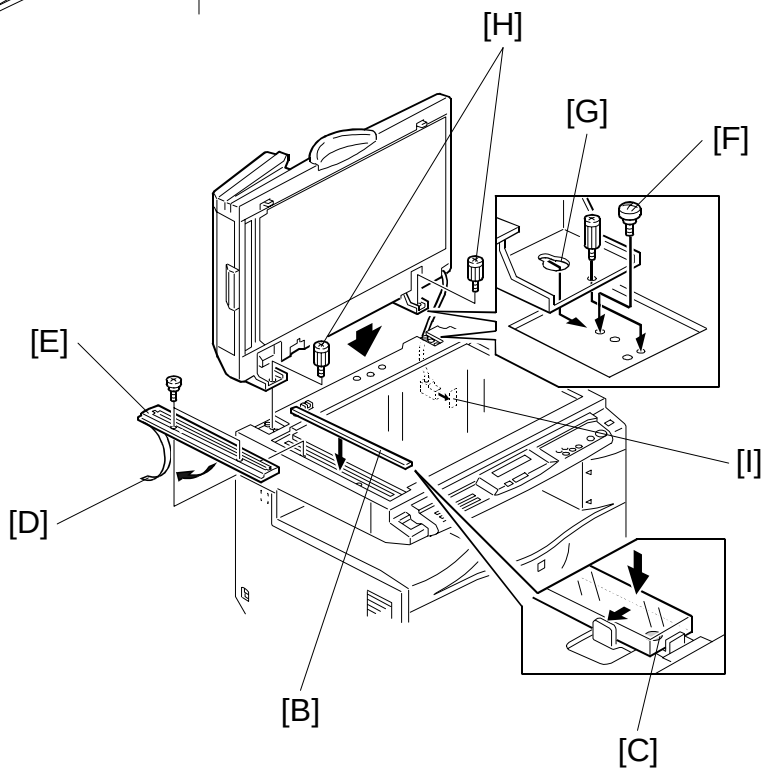

A859I110.WMF

2. Remove the left scale [A] (2 screws).
3. Place the DF exposure glass [B] on the glass holder.
   NOTE: When installing the DF exposure glass, make sure that the white point [C] is positioned at the lower front side, as shown.
4. Peel off the backing [D] of the double side tape attached to the rear side of the scale guide [E], then install the scale guide (2 screws removed in step 2).
5. Install the two stud screws [F].
6. Mount the DF by aligning the holes [G] in the DF with the stud screws, then slide the DF to the front as shown.
7. Secure the DF unit with two screws [H].
8. Connect the cable [I] to the copier.

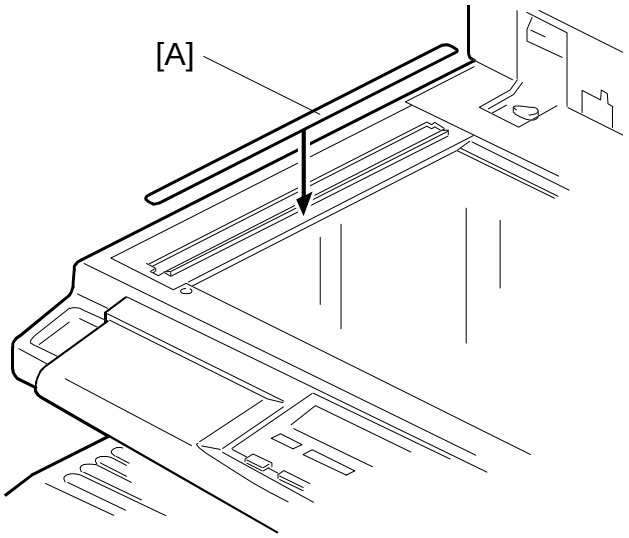

A859I102.WMF

9. Attach the decal [A] as shown.
10. Plug in the power cord, then turn the main switch on.
11. Make a full size copy from the 1st tray using the ADF. Then check to make sure the side-to-side and leading edge registrations are correct. If they are not, adjust their values (SP6-006).

3.4 PAPER TRAY UNIT (1 TRAY) INSTALLATION

3.4.1 ACCESSORY CHECK

Check the quantity and condition of the accessories in the box against the following list:

Description	Quantity
1. Screw - M4 x 10	4
2. Joint Bracket	2
3. Installation Procedure	1

3.4.2 PAPER TRAY UNIT INSTALLATION PROCEDURE

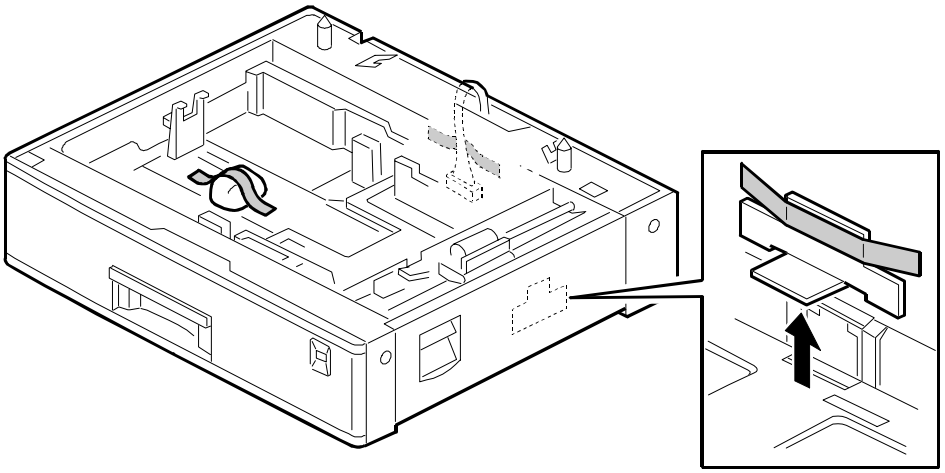

A861I159.WMF

⚠CAUTION

Before installing this option, do the following:

1. **If there is a fax unit in the machine, print out all messages stored in the memory, the lists of user-programmed items, and the system parameter list.**
2. **If there is a printer option in the machine, print out all data in the printer buffer.**
3. **Turn off the main switch and disconnect the power cord, the telephone line, and the network cable.**

1. Remove the strips of tape.

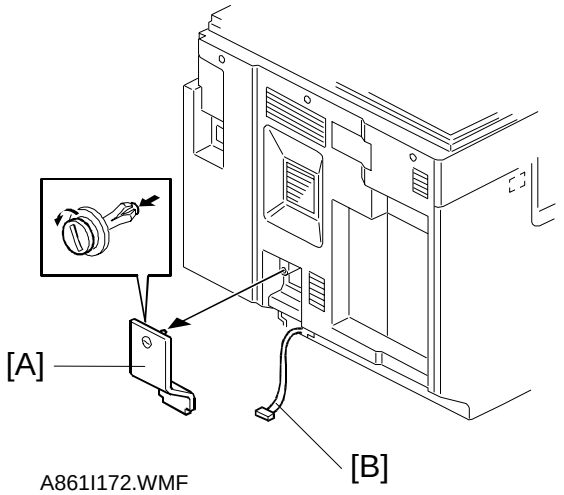

A861I172.WMF

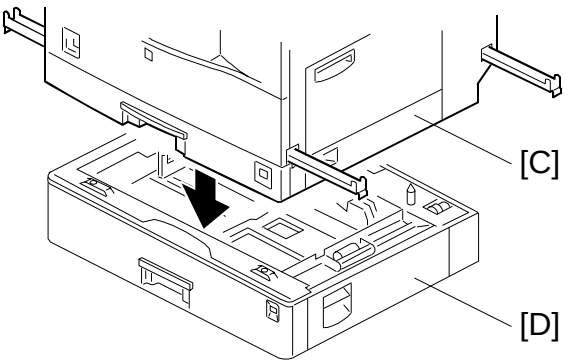

A861I157.WMF

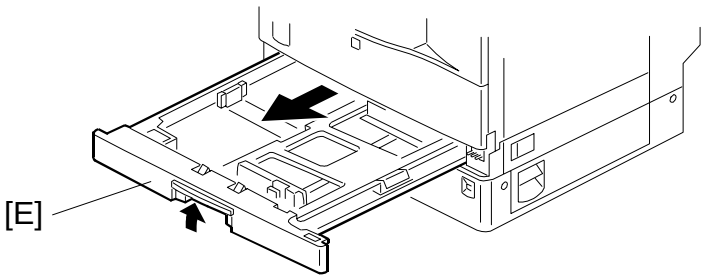

A861I163.WMF

2. Remove the cover [A] (1 screw) and pull out the cable [B].
3. Set the copier [C] on the paper tray unit [D].
   NOTE: When installing the copier, be careful not to pinch the cable [B].
4. Remove the 1st cassette tray [E].

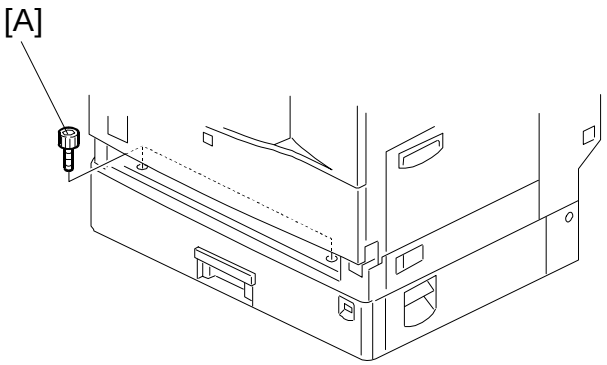

A861I152.WMF

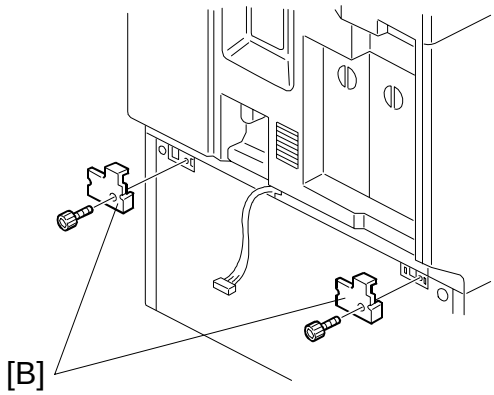

A861I162.WMF

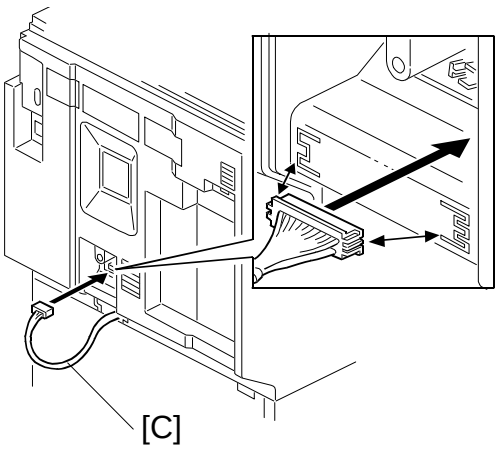

A861I164.WMF

5. Install the two stepped screws [A].
6. Re-install the 1st cassette tray.
7. Install the two brackets [B] (1 screw each).
8. Connect the cable [C] to the copier, as shown.
   NOTE: There are cutouts on both sides of the connector. The left side has one cutout and the right side has two.
9. Re-install the cover removed in step 2 (1 screw).
10. Make a full size copy from the 2nd tray. Then check that the side-to-side registration is correct. If it is not, adjust the value (SP1-002).

3.5 PAPER TRAY UNIT (2 TRAYS) INSTALLATION

3.5.1 ACCESSORY CHECK

Check the quantity and condition of the accessories in the box against the following list:

Description	Quantity
1. Screw - M4 x 10	4
2. Screw - M4 x 5	8
3. Joint Bracket	2
4. Unit Holder	4
5. Installation Procedure	1

3.5.2 PAPER TRAY UNIT INSTALLATION PROCEDURE

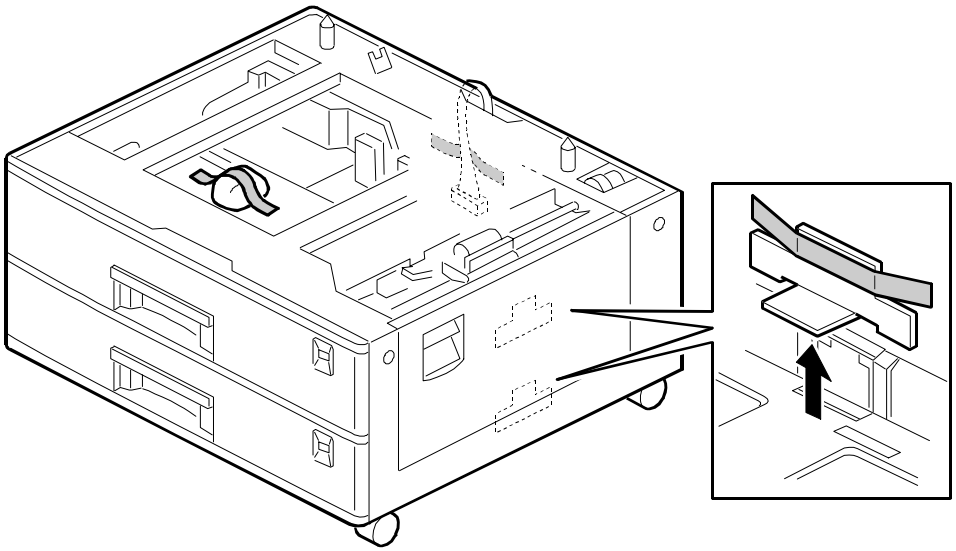

A860I158.WMF

1. Remove the strips of tape.

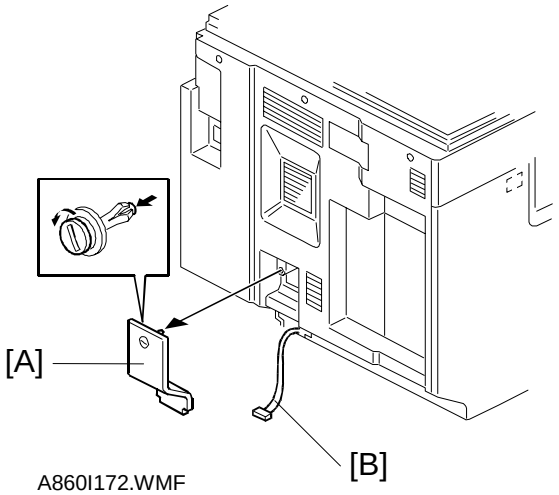

A860I172.WMF

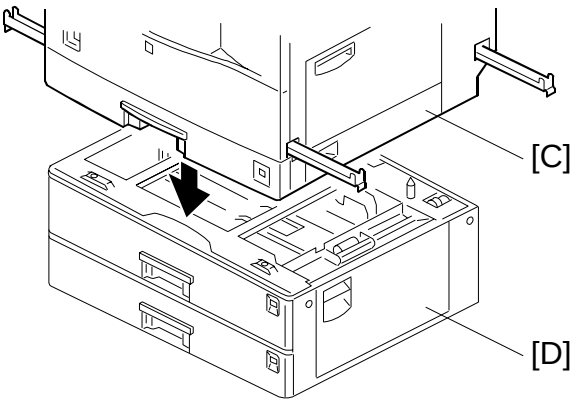

A860I156.WMF

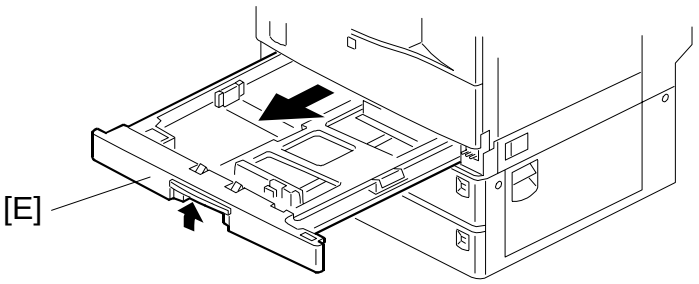

A860I163.WMF

2. Remove the cover [A] (1 screw) and pull out the cable [B].
3. Set the copier [C] on the paper tray unit [D].
   NOTE: When installing the copier, be careful not to pinch the cable [B].
4. Remove the 1st cassette tray [E].

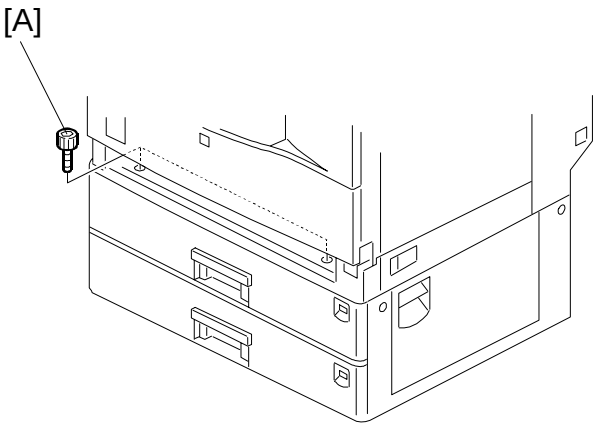

A860I151.WMF

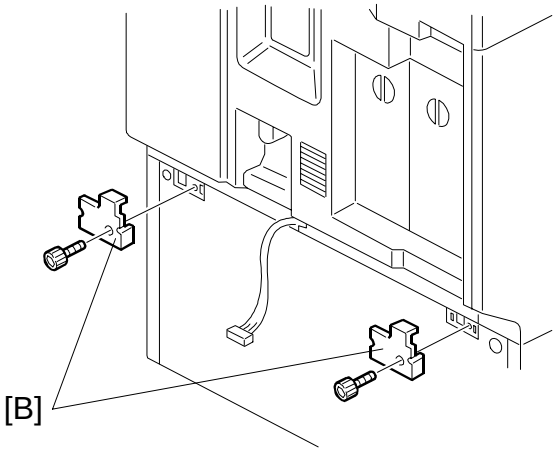

A860I162.WMF

5. Install the two stepped screws [A].
6. Re-install the 1st tray cassette.
7. Install the two brackets [B] (1 screw each).

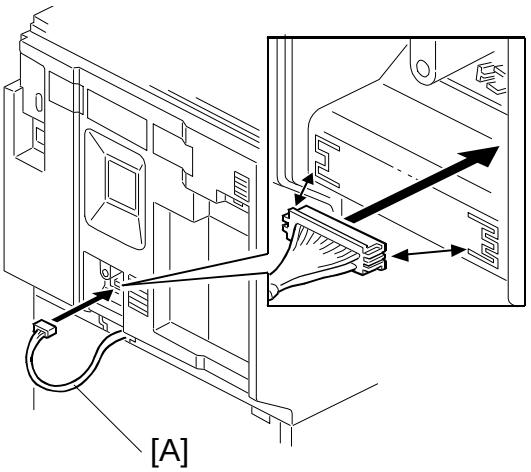

A860I164.WMF

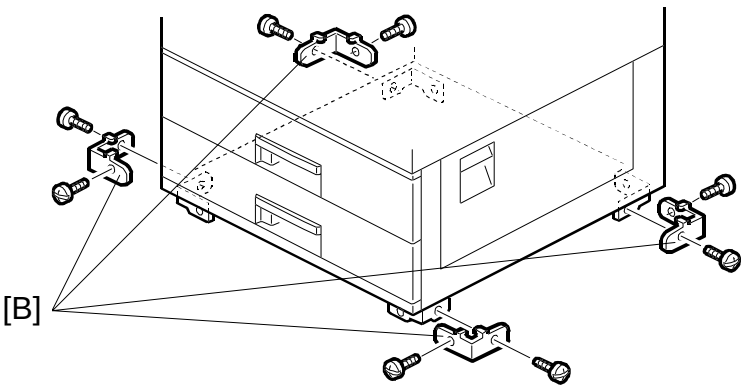

A860I007.WMF

8. Connect the cable [A] to the copier, as shown.
   NOTE: There are cutouts on both sides of the connector. The left side has one cutout, and the right side has two.
9. Re-install the cover removed in step 2 (1 screw).
10. Install the four brackets [B] (2 screws each).
11. Make a full size copy from the 2nd and 3rd trays. Then check that the side-to-side registration is correct. If it is not, adjust the value (SP1-002).

3.6 1-BIN SORTER INSTALLATION

3.6.1 ACCESSORY CHECK

Check the quantity and condition of the accessories in the box against the following list:

Description	Quantity
1. Screw - M3 x 6	1
2. Installation Procedure	1

3.6.2 1-BIN SORTER INSTALLATION PROCEDURE

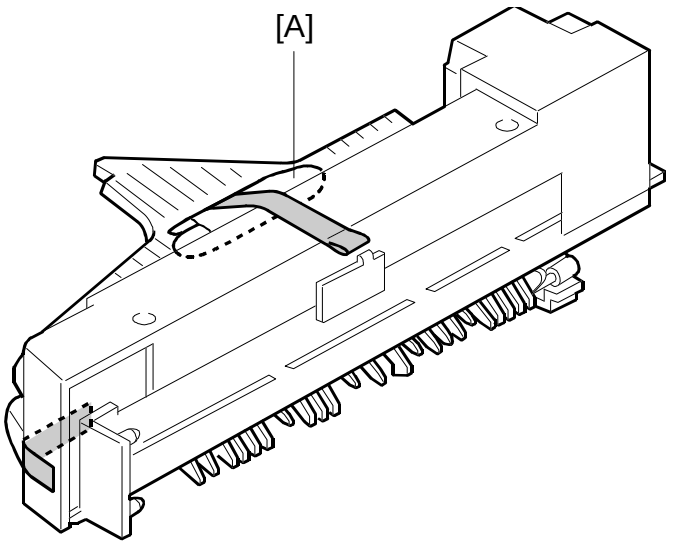

A869I173.WMF

1. Remove the strips of tape.

NOTE: There is a screw in the plastic bag [A].

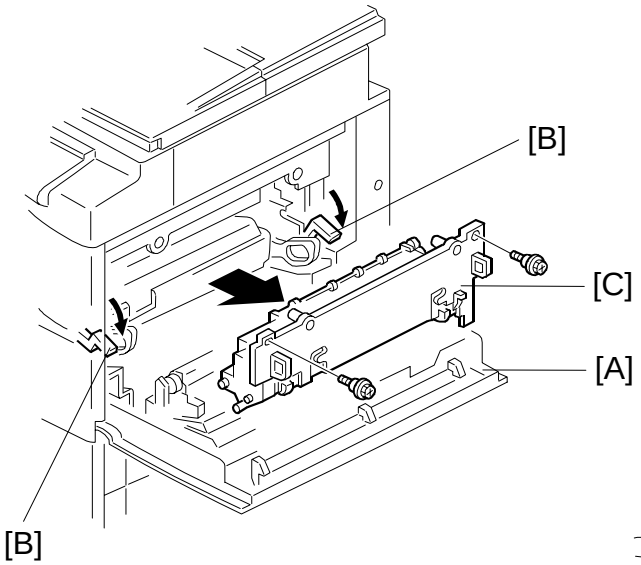

A869I117.WMF

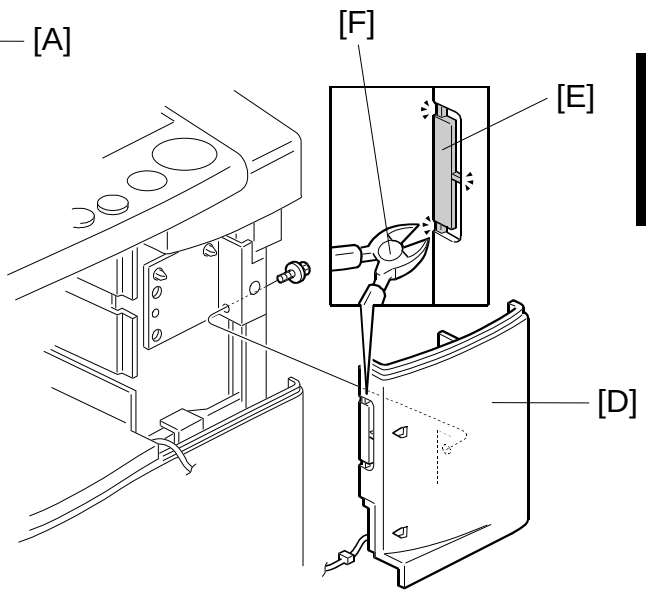

A869I105.WMF

2. Open the right door [A].
3. Release the levers [B] and remove the fusing unit [C] (2 screws).
4. Remove the small front cover [D] (1 screw).
5. Remove the cap [E] with a wire cutter [F].

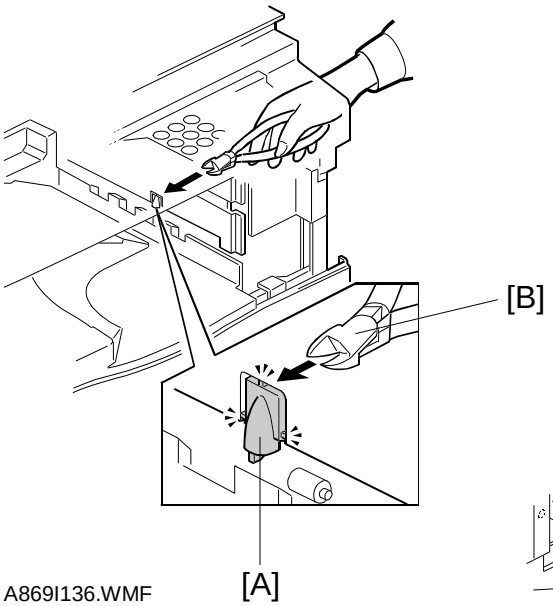

A869I136.WMF

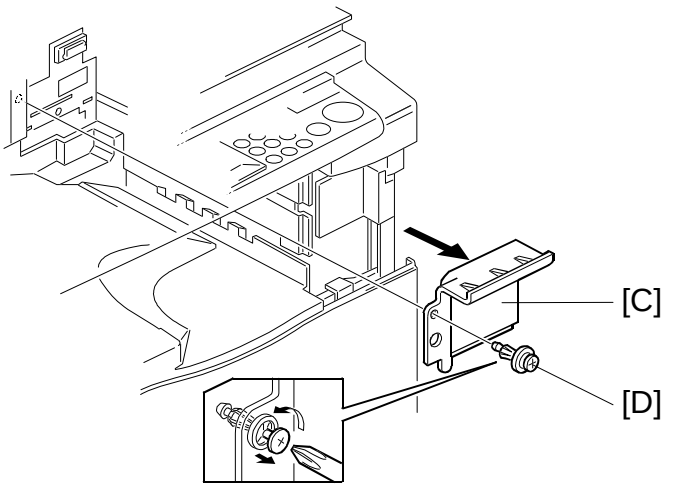

A869I106.WMF

6. Remove the cap [A] with a wire cutter [B].
7. Remove the cover [C] (1 rivet [D]).

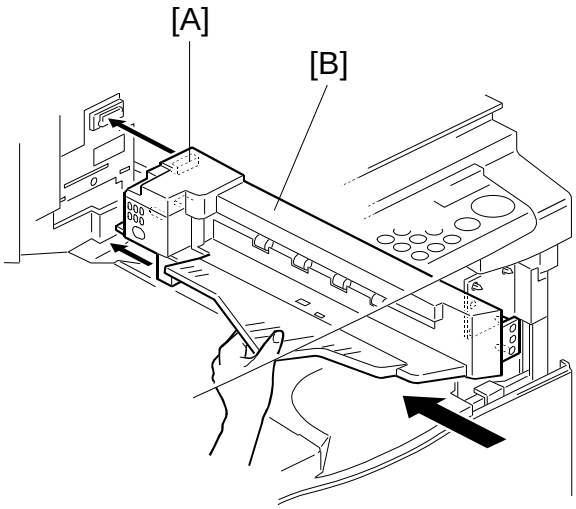

A869I107.WMF

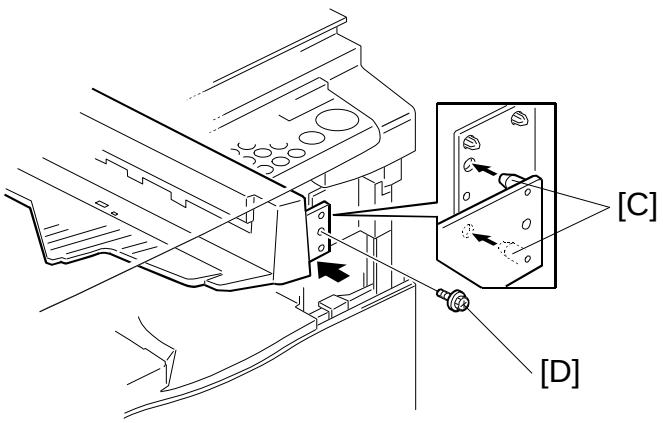

A869I108.WMF

8. Connect the connector [A] for the 1-bin sorter unit [B], as shown.
   NOTE: Before installing the 1-bin sorter unit, check that the component under the connector [A] is not bent.
9. Set the pins [C] for the 1-bin sorter unit and secure the unit with the screw from the accessories [D].

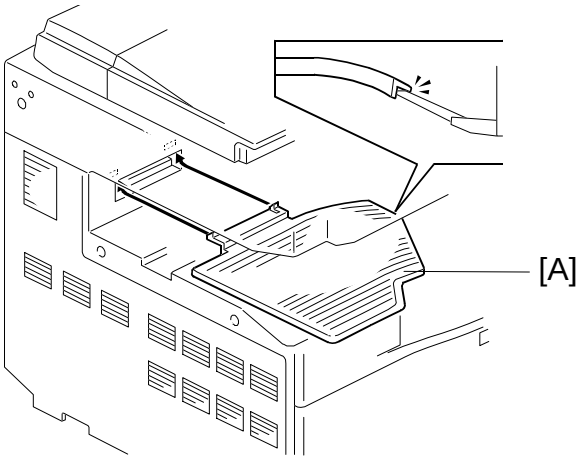

A869I109.WMF

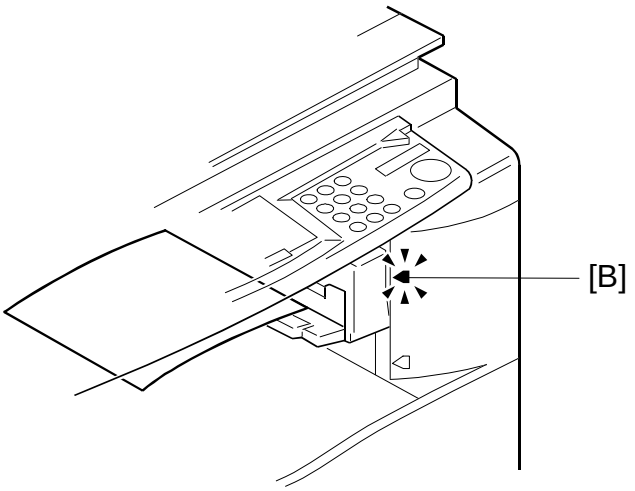

A869I174.WMF

10. Install the bin [A], as shown.
    NOTE: Mount the bin on the 1-bin sorter unit.
11. Re-install the small front cover and fusing unit.
    NOTE: When re-installing the small front cover, be careful not to pinch the cable.
12. Close the right door.
13. Plug in the copier and turn on the main switch.
14. Place the paper on the 1-bin sorter and check that the LED [B] is green.

3.7 PLATEN COVER INSTALLATION

3.7.1 ACCESSORY CHECK

Check the quantity and condition of the accessories in the box against the following list:

Description	Quantity
1. Stepped Screw	2

3.7.2 PLATEN COVER INSTALLATION PROCEDURE

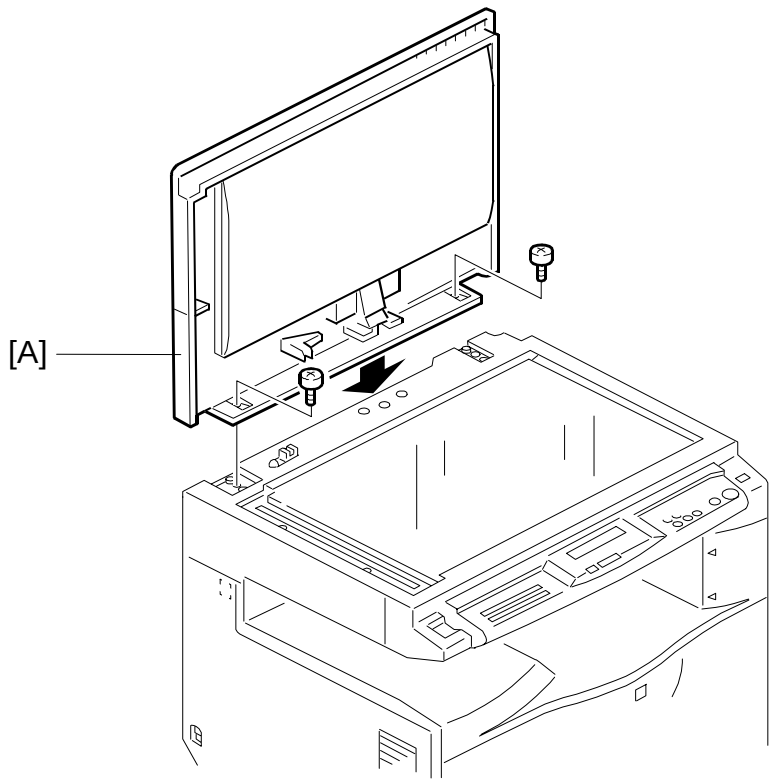

A250I111.WMF

1. Install the platen cover [A] (2 screws).

3.8 EXTENDED MEMORY BOARD INSTALLATION

3.8.1 ACCESSORY CHECK

Check the quantity and condition of the accessories in the box against the following list:

Description	Quantity
1. Screw - M3 x 6 (two of these are not for use with A250)	4
2. Bracket (not for A250)	1
3. Installation procedure	1

3.8.2 EXTENDED MEMORY BOARD INSTALLATION PROCEDURE

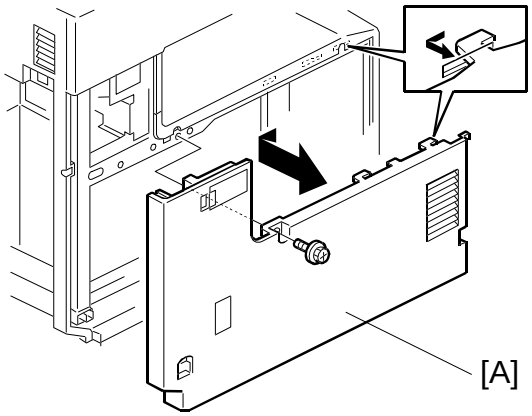

A887I176.WMF

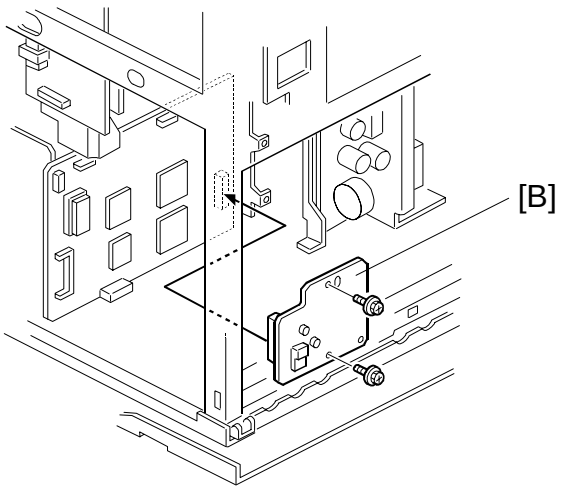

A887I113.WMF

NOTE: If a printer unit, fax unit, or ISDN G4 unit was installed, remove them before installing the extended memory board.

1. Remove the left cover [A], as shown (1 screw).
2. Install the extended memory board [B] (2 screws).
3. Re-install the left cover.

3.9 DRUM HEATER INSTALLATION (OPTION)

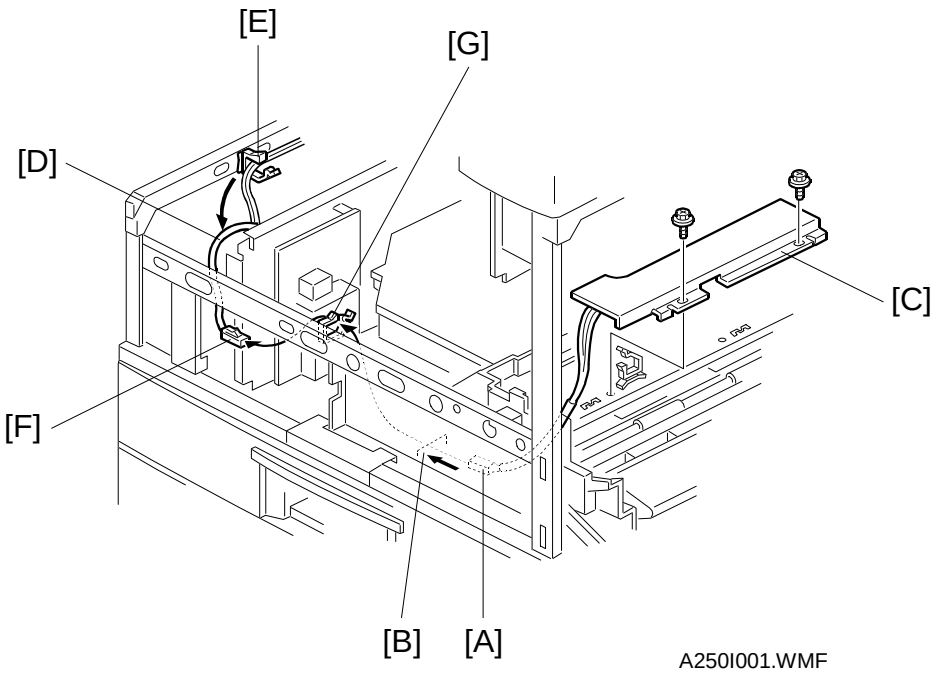

1. Remove the left cover, copy tray, and front cover. (See Exterior Removal, section 6.1.)
2. Remove the AIO cartridge.
3. Remove the fusing unit. (Refer to Fusing Unit Removal, section 6.5.1.)
4. Pass the connector [A] through the opening [B] under the LD unit.
5. Install the anti-condensation heater [C] (2 screws - M3 x 6).
6. Remove the cable [D] from the clamp [E], then join the connectors [A, F].
7. Clamp the cable to the clamp [G].
8. Re-install the fusing unit, AIO cartridge, left cover, copy tray and front cover.

3.10 OPTICS ANTI-CONDENSATION HEATER INSTALLATION (OPTION)

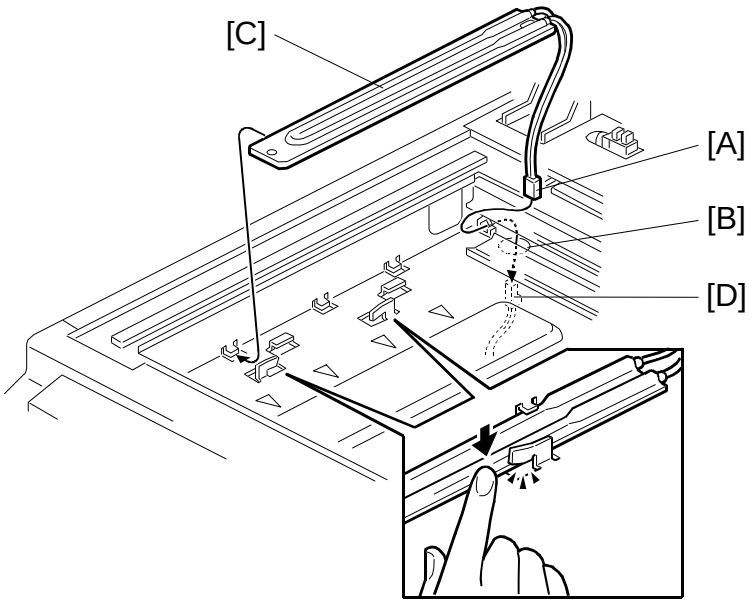

A250I002.WMF

1. Remove the exposure glass. (See Exposure Glass Removal, section 6.2.1.)
2. Remove the rear cover. (See Rear Cover Removal, section 6.1.1.)
3. Pass the connector [A] through the opening [B].
4. Install the optics anti-condensation heater [C], as shown.
5. Join the connectors [A, D].
6. Re-install the exposure glass.

3.11 TRAY HEATER INSTALLATION

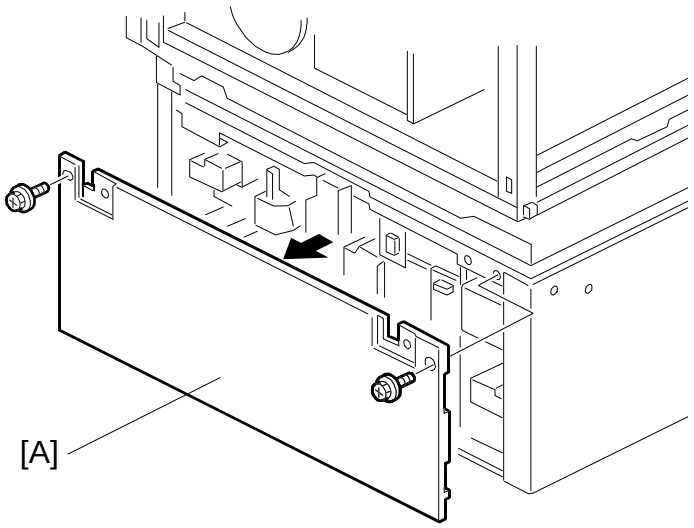

A250I202.WMF

1. Remove the rear cover for the paper tray unit [A] (2 screws).

- 1-tray paper feed unit -

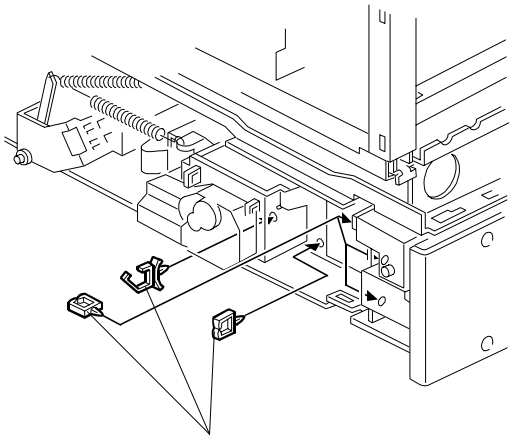

A250I007.WMF

- 2-tray paper feed unit -

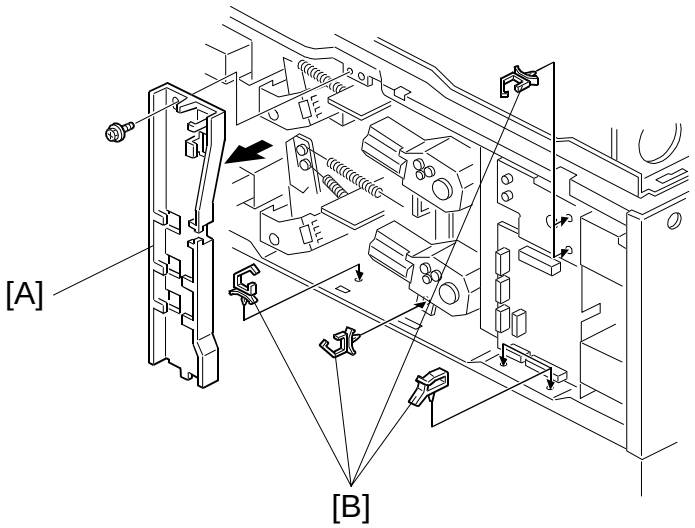

A250I004.WMF

2. Two-tray unit only: Remove the cable guide [A] (1 screw).
3. Install the clamps [B].

- 1-tray paper feed unit -

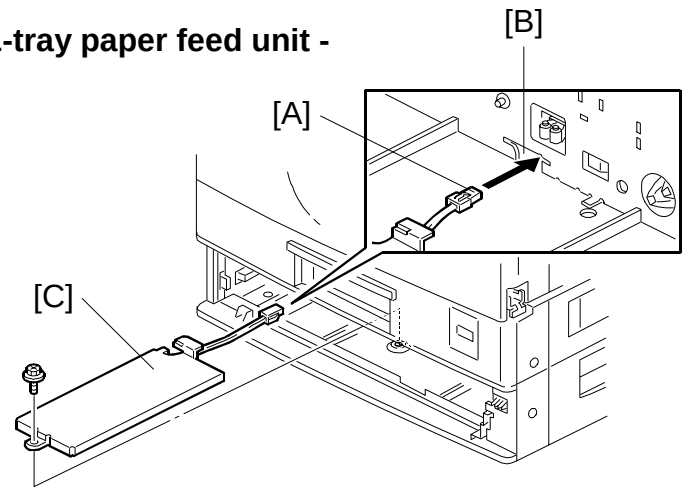

A250I009.WMF

- 2-tray paper feed unit -

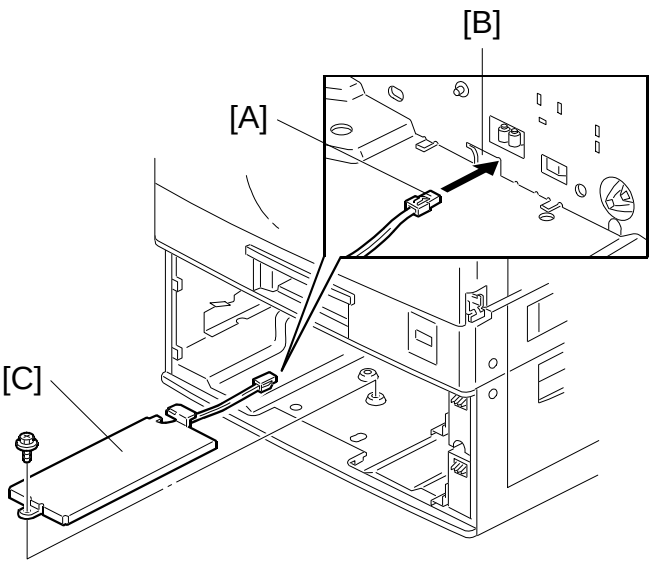

A250I005.WMF

4. Pass the connector [A] through the opening [B].
5. Install the tray heater [C] (1 screw).

- 1-tray paper feed unit -

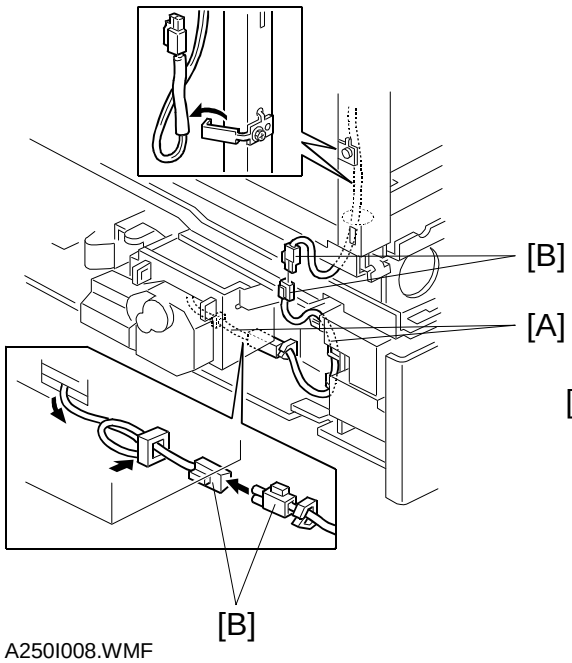

A250I008.WMF

- 2-tray paper feed unit -

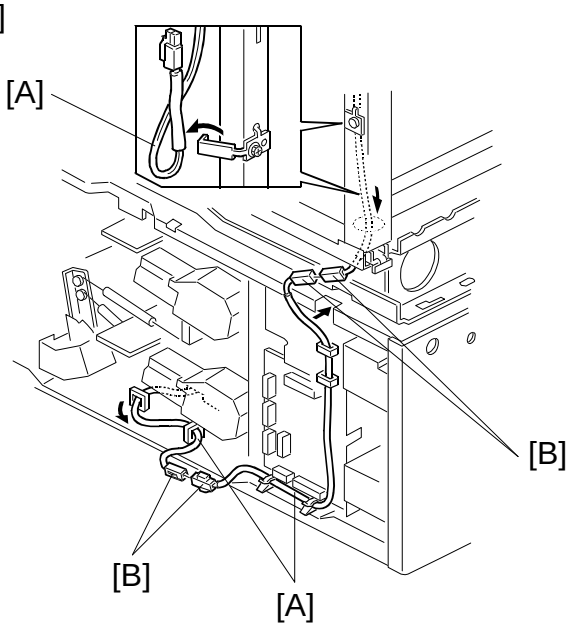

A250I006.WMF

6. Clamp the cables [A], as shown.
7. Join the connectors [B].
8. Two-tray unit only: Re-install the cable guide.

- 1-tray paper feed unit -

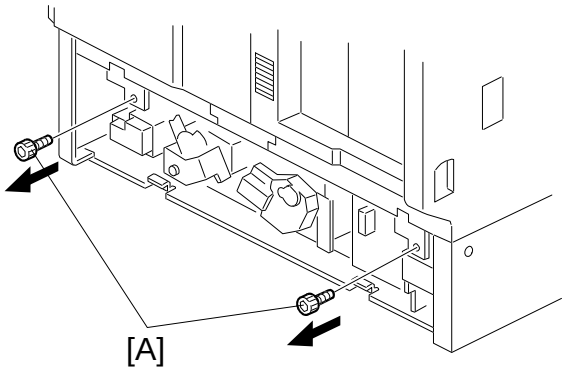

A250I150.WMF

- 2-tray paper feed unit -

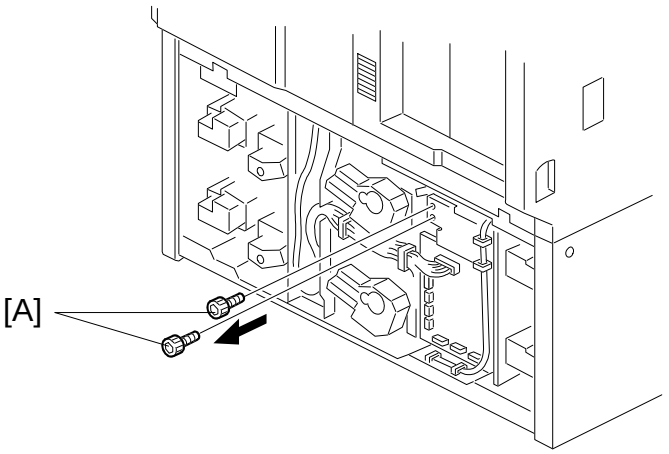

A250I149.WMF

9. Remove the two screws [A] from the rear side of the paper feed unit.

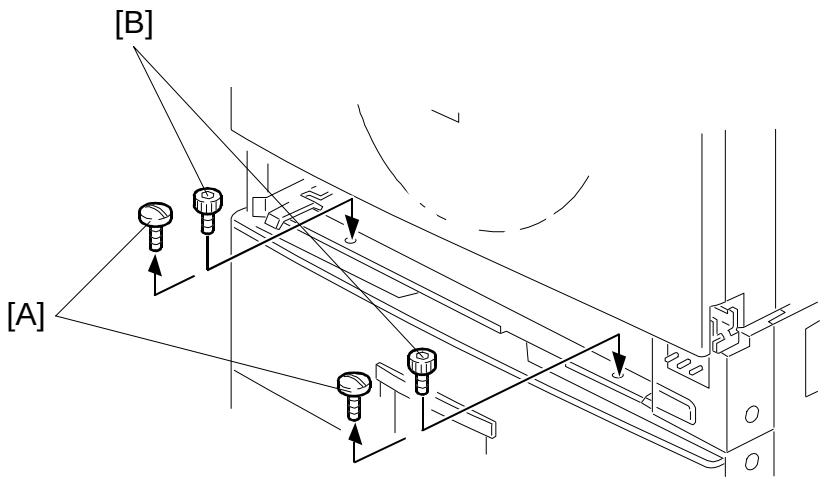

A250I003.WMF

10. Remove the 1st tray.
11. Remove the two screws [A] and install the two screws [B] which were removed in step 9.
12. Re-install the 1st tray and rear cover.

4. SERVICE TABLES

4.1 GENERAL CAUTION

Do not turn off the main switch while any of the electrical components are active. Doing so might cause damage to units, such as the AIO, when they are pulled out of or put back into the copier.

4.1.1 AIO CARTRIDGE (ALL-IN-ONE CARTRIDGE)

The AIO cartridge consists of the OPC drum, development unit, charge roller, cleaning blade, toner supply mechanism, and toner collection area. Follow the cautions below when handling an AIO cartridge.

1. Store the AIO cartridge in a cool, dry place away from heat.
2. Dispose of used AIO cartridges in accordance with local regulations.

4.1.2 TRANSFER ROLLER UNIT

1. Never touch the transfer roller surface with bare hands.
2. Take care not to scratch the transfer roller as the surface is easily damaged.

4.1.3 SCANNER UNIT

1. Clean the exposure glass with alcohol or with glass cleaner to reduce the amount of static electricity on the surface of the glass.
2. Use a blower brush or a cotton pad with water to clean the mirrors and lens.
3. Do not bend or crease the exposure lamp flat cable.
4. Do not disassemble the lens unit. Doing so will throw the lens and the copy image out of focus.
5. Do not turn any of the CCD positioning screws. Doing so will throw the CCD out of position.

4.1.4 LASER UNIT

1. Do not loosen the screws that secure the LD drive board to the laser diode casing. Doing so would throw the LD unit out of adjustment.
2. Do not adjust the variable resistors on the LD unit, as they are adjusted in the factory.
3. The polygon mirror and F-theta mirror are very sensitive to dust.
4. Do not touch the glass surface of the polygon mirror motor unit with bare hands.

4.1.5 FUSING UNIT

1. After installing the fusing thermistor, make sure that it is in contact with the hot roller and that it rotates freely.
2. Be careful not to damage the edges of the hot roller strippers or their tension springs.
3. Do not touch the fusing lamp and rollers with bare hands.
4. Make sure that the fusing lamp is positioned correctly and that it does not touch the inner surface of the hot roller.

4.1.6 PAPER FEED

1. Do not touch the surface of the paper feed roller.
2. The side fences and end fences of the paper tray must be positioned correctly to align with the actual paper size to avoid paper misfeeds.

4.1.7 OTHERS

1. If the optional tray, drum, and optics anti-condensation heaters have been installed, keep the copier power cord plugged in, even when the copier main switch is turned off. This keeps the heaters energized.

4.2 SERVICE PROGRAM MODE

4.2.1 SERVICE PROGRAM MODE OPERATION

The service program (SP) mode is used to check electrical data, change modes, and adjust values.

Service Program Access Procedure

How to Enter the SP Mode

Press the following keys in sequence.

[Clear Modes] → (1) → (0) → (7) → (C/Stop)

- Hold the (C/Stop) (Clear/Stop) key for more than 3 seconds.

How to Exit SP Mode

Press the “Back” and “Exit” keys or [Clear Modes] (Clear Modes) key until the standby mode display appears.

Accessing Copy Mode from within an SP Mode

1. Press the (Interrupt) key.
2. Select the appropriate copy mode and make trial copies.
3. To return to SP mode, press the (Interrupt) key again.

How to Select the Program Number

Program numbers are composed or two or three levels.

To input the required program number, select each program level in sequence.

1. Select the 1st level program number on the numeric keypad and press the (#) key or “OK” key.
   NOTE: The 1st level program number can be selected using the “Prev.” or “Next” key.
2. Select the 2nd level program number at the numeric keypad and press the (#) key or “OK” key.
   NOTE: The 2nd level program number can be selected using the “Prev.” or “Next” key.
3. If there any are 3rd level programs in SP mode, they can be selected in the same way as the 1st and 2nd level SP modes.
   NOTE: The 3rd level program number can be selected using the “Prev.” or “Next” key.

To input a value or setting for an SP mode

1. Enter the required program mode as explained above.
2. Enter the required setting using the numeric keys, then press the # key or "OK" key.

NOTE: 1) If you forget to press the # key or "OK" key, the previous value remains.
2) Change between "+" and "–" using the •/* key before entering the required value.

3. Exit SP mode.

4.2.2 SERVICE PROGRAM MODE TABLES

NOTE: 1) In the Function column, comments are in *italics*.
2) In the Setting column, the default value is in **bold** letters.
3) An asterisk "*" after the mode number means that this mode is stored in the NVRAM. If you do a RAM reset, all these SP modes will be return to their factory settings.
4) SP4-915 to 4-941: When the SP mode name has a prefix of "P-", the adjustment is only effective when the user selects an original type of "Service Mode" (User Tools - General Features - 08. Image Adjustment).

Mode No.			Function	Settings
Class 1 and 2	**Class 3**			
1-001*	1	Leading Edge Regist. (Paper Tray Feed)	Adjusts the printing leading edge registration from the paper tray feed using the Trimming Area Pattern (SP5-902, No.10).	+9 ~ –9 0.1 mm/step **+0.0 mm**
			Use the •/ key to toggle between + and - before entering the value. The specification is 2 ± 1.5 mm. See "Replacement and Adjustment - Copy Adjustment" for details.*	
	2	Leading Edge Regist. (By-pass Feed)	Adjusts the printing leading edge registration from the by-pass feed using the Trimming Area Pattern (SP5-902, No.10).	+9 ~ –9 0.1 mm/step **+0.0 mm**
			Use the •/ key to toggle between + and - before entering the value. The specification is 2 ± 1.5 mm. See "Replacement and Adjustment - Copy Adjustment" for details.*	

Mode No.			Function	Settings
Class 1 and 2	**Class 3**			
1-002*	1	Side-to-Side Regist. (1st Paper Feed)	Adjusts the printing side-to-side registration from the 1st paper feed station using the Trimming Area Pattern (SP5-902, No.10). *Use the # key to toggle between + and - before entering the value. The specification is 2 ± 1.5 mm. See "Replacement and Adjustment - Copy Adjustment" for details.*	+9 ~ –9 0.1 mm/step **+0.0 mm**
	2	Side-to-Side Regist. (2nd Paper Feed)	Adjusts the printing side-to-side registration from the 2nd paper feed station using the Trimming Area Pattern (SP5-902, No.10). *Use the # key to toggle between + and - before entering the value. The specification is 2 ± 1.5 mm. See "Replacement and Adjustment - Copy Adjustment" for details.*	+9 ~ –9 0.1 mm/step **+0.0 mm**
	3	Side-to-Side Regist. (3rd Paper Feed)	Adjusts the printing side-to-side registration from the 3rd paper feed station using the Trimming Area Pattern (SP5-902, No.10). *Use the # key to toggle between + and - before entering the value. The specification is 2 ± 1.5 mm. See "Replacement and Adjustment - Copy Adjustment" for details.*	+9 ~ –9 0.1 mm/step **+0.0 mm**
	4	Side-to-Side Regist. (By-pass Feed)	Adjusts the printing side-to-side registration from the by-pass paper feed station using the Trimming Area Pattern (SP5-902, No.10). *Use the # key to toggle between + and - before entering the value. The specification is 2 ± 1.5 mm. See "Replacement and Adjustment - Copy Adjustment" for details.*	+9 ~ –9 0.1 mm/step **+0.0 mm**
1-003*	1	Paper Feed Timing (1st Paper Feed)	Adjusts the paper feed clutch timing at registration. The paper feed clutch timing determines the amount of paper buckle at registration. (A larger setting leads to more buckling.)	0 ~ 30 1 mm/step **7 mm**
	2	Paper Feed Timing (2nd Paper Feed)		0 ~ 30 1 mm/step **8 mm**
	3	Paper Feed Timing (3rd Paper Feed)		0 ~ 30 1 mm/step **8 mm**
	4	Paper Feed Timing (By-pass Feed)		0 ~ 30 1 mm/step **11 mm**
1-007		By-pass Paper Size Display	Displays the by-pass paper width sensor output.	

Service Tables

Mode No.			Function	Settings
Class 1 and 2	**Class 3**			
1-103*		Fusing Idling	Selects whether fusing idling is done or not. *Normally disabled in this machine. However, if fusing is incomplete on the 1st and 2nd copies, switch it on. This may occur if the room is cold. Refer to "Detailed Section Descriptions - Fusing Temperature Control" for more details.*	**0: No** 1: Yes
1-105*	1	Fusing Temp. Adj. (Stand-by)	Adjusts the fusing temperature for standby mode.	100 ~ 190 1°C/step **180°C**
	2	Fusing Temp. Adj. (Energy Saver Level 2)	Adjusts the fusing temperature for energy saver level 2. *With a lower value, the machine takes more time to reach the ready condition.*	0 ~ 140 1°C/step **80°C**
1-106		Fusing Temp. Display	Displays the fusing temperature. *Press the [Clear Modes] key to exit the display.*	
1-107*		Fusing Soft Start Adjustment	Adjusts the number of zero-cross cycles of the fusing lamp ac supply needed for the fusing lamp power to reach 100%. Use a higher number if the customer complains about sudden power dropouts. *See "Detailed Descriptions - Fusing Unit" for details on SP1-107.* ***Models other than European models***	**0: 6 times** 1: 10 times 2: 20 times
	1	Fusing Soft Start Adjustment (Stand-by)	Adjusts the number of zero-cross cycles of the fusing lamp ac supply needed for the fusing lamp power to reach 100% when raising the temperature to the standby temperature. Use a higher number if the customer complains about sudden power dropouts. *See "Detailed Descriptions - Fusing Unit" for details on SP1-107.* ***European model only***	0: 6 times 1: 10 times **2: 20 times**
	2	Fusing Soft Start Adjustment (Copying)	Adjusts the number of zero-cross cycles of the fusing lamp ac supply needed for the fusing lamp power to reach 100% when raising the temperature during copying. Use a higher number if the customer complains about sudden power dropouts. *See "Detailed Descriptions - Fusing Unit" for details on SP1-107.* ***European model only***	0: 6 times **1: 10 times** 2: 20 times

Mode No.			Function	Settings
Class 1 and 2	**Class 3**			
1-108*		Fusing Soft Start Setting	Selects whether the fusing temperature control cycle is 1 or 3 seconds. *If this is "1", the power supply fluctuates less when the fusing lamp turns on. See "Detailed Descriptions - Fusing Unit" for details.*	**0: 1 sec** 1: 3 sec
1-901		Auto Re-start Interval	Adjusts the auto re-start time. ***Do not change the value.***	0 ~ 9999 1 s/step **0 s**
1-902		AC Frequency Display	Displays the fusing lamp power control frequency which is detected by the zero cross signal generator. *Under "54" equals 50 Hz. Otherwise, 60 Hz.*	
1-908*	1	Paper Tray Adj. (N Size Back Time - 1)	Optional Paper Tray Unit Only: If a middle size threshold is not stored with SP1-908-9, this SP adjusts the upper lift motor reverse time for paper sizes larger than the small size threshold set with SP1-908-8. If a middle size threshold is stored with SP1-908-9, then this SP adjusts the motor reverse time for sizes larger than the middle size. *See "Option - Paper Tray Unit" for details on SP1-908.*	0 ~ 9000 1 ms/step **300 ms**
	2	Paper Tray Adj. (S Size Back Time - 1)	Optional Paper Tray Unit Only: Adjusts the upper lift motor reverse time for paper of the same size as or smaller than the small size threshold set with SP1-908-8. *See "Option - Paper Tray Unit" for details on SP1-908.*	0 ~ 9000 1 ms/step **600 ms**
	3	Paper Tray Adj. (M Size Back Time - 1)	Optional Paper Tray Unit Only: Adjusts the upper lift motor reverse time for paper sizes larger than the small size threshold set with SP1-908-8, up to and including the middle size threshold set with SP1-908-9. If a middle size threshold is not stored with SP1-908-9, this SP is not used (with the default settings, this SP is not used in this machine). *See "Option - Paper Tray Unit" for details on SP1-908.*	0 ~ 9000 1 ms/step **100 ms**

Mode No.			Function	Settings
Class 1 and 2	**Class 3**			
1-908*	4	Paper Tray Adj. (S Size Comeback T - 1)	Optional Paper Tray Unit Only: Adjusts the upper lift motor forward rotation time for paper of the same size as or smaller than the small size threshold set with SP1-908-8. The motor rotates forward when the remaining paper is lower than the value of SP1-908-6. *See "Option - Paper Tray Unit" for details on SP1-908.*	0 ~ 9000 1 ms/step **300 ms**
	5	Paper Tray Adj. (M Size Comeback T - 1)	Optional Paper Tray Unit Only: Adjusts the upper lift motor forward rotation time for paper sizes larger than the small size threshold set with SP1-908-8, up to and including the middle size threshold set with SP1-908-9. The motor rotates forward when the remaining paper is lower than the value of SP1-908-7. If a middle size threshold is not stored with SP1-908-9, this SP is not used (with the default settings, this SP is not used in this machine). *See "Option - Paper Tray Unit" for details on SP1-908.*	0 ~ 9000 1 ms/step **0 ms**
	6	Paper Tray Adj. (S Size Ret. Amount - 1)	Optional Paper Tray Unit Only: Selects the remaining paper amount limit for use with SP1-908-4. *See "Option - Paper Tray Unit" for details on SP1-908.*	0: Non (Empty) **1: Near End** 2: 25% 3: 75%
	7	Paper Tray Adj. (M Size Ret. Amount - 1)	Optional Paper Tray Unit Only: Selects the remaining paper amount limit for use with SP1-908-5. With the default settings, this SP is not used in this machine. *See "Option - Paper Tray Unit" for details on SP1-908.*	0: Non (Empty) **1: Near End** 2: 25% 3: 75%
	8	Paper Tray Adj. (S Size Setting - 1)	Optional Paper Tray Unit Only: Selects the small size threshold for the upper tray. "0" means that this setting is not used. *The size used by SP1-908 is determined by paper width. See "Option - Paper Tray Unit" for details on SP1-908.*	0: Non (Not use) **1: HLT** 2: A4 3: LT 4: DLT 5: A3

Mode No.			Function	Settings
Class 1 and 2	**Class 3**			
1-908*	9	Paper Tray Adj. (M Size Setting - 1)	Optional Paper Tray Unit Only: Selects the middle size threshold for the upper tray. "0" means that this setting is not used. With the default settings, this SP is not used in this machine. *The value must be larger than the small size threshold (SP1-908-8). The size used by SP1-908 is determined by paper width. See "Option - Paper Tray Unit" for details on SP1-908.*	**0: Non (Not use)** 1: HLT 2: A4 3: LT 4: DLT 5: A3
	10	Paper Tray Adj. (N Size Back Time - 2)	Optional Paper Tray Unit Only: If a middle size threshold is not stored with SP1-908-18, this SP adjusts the lower lift motor reverse time for paper sizes larger than the small size threshold set with SP1-908-17. If a middle size threshold is stored with SP1-908-18, then this SP adjusts the motor reverse time for sizes larger than the middle size. *See "Option - Paper Tray Unit" for details on SP1-908.*	0 ~ 9000 1 ms/step **300 ms**
	11	Paper Tray Adj. (S Size Back Time - 2)	Optional Paper Tray Unit Only: Adjusts the lower lift motor reverse time for paper of the same size as or smaller than the small size threshold set with SP1-908-17. *See "Option - Paper Tray Unit" for details on SP1-908.*	0 ~ 9000 1 ms/step **600 ms**
	12	Paper Tray Adj. (M Size Back Time - 2)	Optional Paper Tray Unit Only: Adjusts the lower lift motor reverse time for paper sizes larger than the small size threshold set with SP1-908-17, up to and including the middle size threshold set with SP1-908-18. If a middle size threshold is not stored with SP1-908-18, this SP is not used (with the default settings, this SP is not used in this machine). *See "Option - Paper Tray Unit" for details on SP1-908.*	0 ~ 9000 1 ms/step **100 ms**

Mode No.			Function	Settings
Class 1 and 2	**Class 3**			
1-908*	13	Paper Tray Adj. (S Size Comeback T - 2)	Optional Paper Tray Unit Only: Adjusts the lower lift motor forward rotation time for paper of the same size as or smaller than the small size threshold set with SP1-908-17. The motor rotates forward when the remaining paper is lower than the value of SP1-908-15. *See "Option - Paper Tray Unit" for details on SP1-908.*	0 ~ 9000 1 ms/step **300 ms**
	14	Paper Tray Adj. (M Size Comeback T - 2)	Optional Paper Tray Unit Only: Adjusts the lower lift motor forward rotation time for paper sizes larger than the small size threshold set with SP1-908-17, up to and including the middle size threshold set with SP1-908-18. The motor rotates forward when the remaining paper is lower than the value of SP 1-908-16. If a middle size threshold is not stored with SP1-908-18, this SP is not used (with the default settings, this SP is not used in this machine). *See "Option - Paper Tray Unit" for details on SP1-908.*	0 ~ 9000 1 ms/step **0 ms**
	15	Paper Tray Adj. (S Size Ret. Amount - 2)	Optional Paper Tray Unit Only: Selects the remaining paper amount limit for use with SP1-908-13. *See "Option - Paper Tray Unit" for details on SP1-908.*	0: Non (Empty) **1: Near End** 2: 25% 3: 75%
	16	Paper Tray Adj. (M Size Ret. Amount - 2)	Optional Paper Tray Unit Only: Selects the remaining paper amount limit for use with SP1-908-14. With the default settings, this SP is not used in this machine. *See "Option - Paper Tray Unit" for details on SP1-908.*	0: Non (Empty) **1: Near End** 2: 25% 3: 75%
	17	Paper Tray Adj. (S Size Setting - 2)	Optional Paper Tray Unit Only: Selects the small size threshold for the lower tray. "0" means that this setting is not used. *The size used by SP1-908 is determined by paper width. See "Option - Paper Tray Unit" for details on SP1-908.*	0: Non (Not use) **1: HLT** 2: A4 3: LT 4: DLT 5: A3

Mode No.			Function	Settings
Class 1 and 2	**Class 3**			
1-908*	18	Paper Tray Adj. (M Size Setting - 2)	Optional Paper Tray Unit Only: Selects the middle size threshold for the lower tray. "0" means that this setting is not used. With the default settings, this SP is not used in this machine. *The value must be larger than the small size threshold (SP1-908-17). The size used by SP1-908 is determined by paper width. See "Option - Paper Tray Unit" for details on SP1-908.*	**0: Non (Not use)** 1: HLT 2: A4 3: LT 4: DLT 5: A3
1-909*		Tray Motor Reverse Time	Adjusts the tray motor reverse time. *The tray motor reverses when the tray is pulled out. The tray can be put back in the machine without damage while the motor reverses. See "Option - Paper Tray Unit" for details on SP1-908.*	0 ~ 9000 1 ms/step **1700 ms**
2-001*		Charge Roller Bias Adjustment	Adjusts the voltage applied to the charge roller. ***Do not change the value.***	0 ~ –1500 1 V/step **–600 V**
2-101*	1	Erase Margin Adjustment (Leading Edge)	Adjusts the leading edge erase margin. *The specification is 2 ± 1.5 mm. See "Replacement and Adjustment - Copy Adjustment" for details.*	0 ~ 9 1 mm/step **2 mm**
	2	Erase Margin Adjustment (Trailing Edge)	Adjusts the trailing edge erase margin. *The specification is more than 0.5 mm. See "Replacement and Adjustment - Copy Adjustment" for details.*	0 ~ 9 1 mm/step **3 mm**
	3	Erase Margin Adjustment (Left Side)	Adjusts the left edge erase margin. *The specification is 2 ± 1.5 mm. See "Replacement and Adjustment - Copy Adjustment" for details.*	0 ~ 9 1 mm/step **2 mm**
	4	Erase Margin Adjustment (Right Side)	Adjusts the right edge erase margin. *The specification is more than 0.5 mm. See "Replacement and Adjustment - Copy Adjustment" for details.*	0 ~ 9 1 mm/step **2 mm**
2-103*		LD Power Adjustment	Adjusts the LD power. ***Do not change the value.***	0 ~ 255 1 /step **129**
2-106*		ID Adj. for Test Pattern	Adjusts the image density level for black pixels on test pattern printouts (patterns are made with SP5-902).	0 ~ 255 1 /step **255**

Mode No.			Function	Settings
Class 1 and 2	**Class 3**			
2-201*		Development Bias Adjustment	Adjusts the development bias during copying. *This can be adjusted as a temporary measure if faint copies appear due to an aging drum.*	0 ~ –1000 1 V/step **–400 V**
2-213*		Copies after Near End	Selects the number of copies after toner near-end has been detected. See Detailed Descriptions - Development for details.	**0: 150 pages** 1: 50 pages 2: 250 pages
2-214*		Copies before Near End	Selects the number of copies before toner near-end has been detected. The value depends on the setting of SP2-213. See Detailed Descriptions - Development for details.	**0: Normal** 1: Low 2: High
2-301*	1	Transfer Current (Paper Tray Feed)	Adjusts the current applied to the transfer roller during copying from paper tray when the user uses the "Normal" paper setting. *If the user normally feeds thicker paper from the paper tray, use a higher setting.*	0: –2 μA **1: 0 μA** 2: +2 μA 3: +4 μA
	2	Transfer Current (By-pass Feed)	Adjusts the current applied to the transfer roller during copying from by-pass tray when the user uses the "Normal" or "Thick" paper setting. *If the user normally feeds thicker paper from the by-pass tray, use a higher setting.*	0: –2 μA **1: 0 μA** 2: +2 μA 3: +4 μA
	3	Transfer Current (Cleaning)	Adjusts the current applied to the transfer roller during roller cleaning. *If toner remains on the roller after cleaning, increase the current.*	0 ~ –10 1 μA/step **–3 μA**
	4	Transfer Current (Input)	This is for the designer's test purposes. ***Do not change the value.***	0 ~ 30 1 μA/step **0 μA**
	5	Transfer Current (Special Paper)	Adjusts the current applied to the transfer roller during copying on "special" paper. *If the user selects "Dry" paper with User Tools - System Settings - 17. Paper Status, the current set with this SP mode is used. If there are white spots on the copy, use a higher setting if possible.*	**0: 25 μA** 1: 22 μA 2: 20 μA
2-901*		LD Discharge Interval	Selects the interval at which the LD discharges the OPC drum. *See "Detailed Descriptions - AIO cartridge" for details.*	**0: 25 pages** 1: 50 pages 2: 100 pages
2-902*		FCI Smoothing	Selects whether the FCI smoothing function to remove jagged edges is enabled or disabled. *FCI smoothing is only used with the Sharp Text setting in text mode.*	0: No (Disabled) **1: Yes (Enabled)**

Mode No.			Function	Settings
Class 1 and 2	**Class 3**			
2-905*		Gradation Type	This is for the designer's test purposes. ***Do not change the value.***	
2-910		Transfer Roller Cleaning	Determines how often the transfer roller is cleaned. *0: The machine cleans the transfer roller every 10 copies (it waits for the job to finish).* *1: The machine cleans the transfer roller after every job.*	**0: No** 1: Yes
2-915*		Polygon Motor Idling Time	Selects the polygon motor idling time. *If the user sets an original, touches a key, or opens the platen cover/DF, the polygon motor starts idling to make a faster first copy. However, with the default (25 s), the motor stops if the user does nothing for 25 s, and stops 25 s after the end of a job.* *If set at "0", the polygon motor never turns off during stand-by. However, when the machine goes into energy saver mode, the polygon motor turns off regardless of this timer.*	0: Non 1: 15 sec **2: 25 sec**
2-998*		Printer Main Magnification	Adjusts the magnification in the main scan direction for the printer. *Use the ⊙ key to toggle between + and - before entering the value. The specification is ± 0.5%. See "Replacement and Adjustment - Copy Adjustment" for details.*	– 0.5 ~ + 0.5 0.1 %/step **0.0%**
4-008*		Main Scan Magnification	Adjusts the magnification in the main scan direction for scanning. *Use the ⊙ key to toggle between + and - before entering the value. The specification is ± 0.5%. See "Replacement and Adjustment - Copy Adjustment" for details.*	– 1.0 ~ + 1.0 0.1 %/step **0.0%**
4-010*		Leading Edge Registration	Adjusts the leading edge registration for scanning in platen mode. *(–): The image moves in the direction of the leading edge.* *Use the ⊙ key to toggle between + and - before entering the value. The specification is 2 ± 1.5 mm. See "Replacement and Adjustment - Copy Adjustment" for details.*	– 2.0 ~ + 9.0 0.1 mm/step **0.0 mm**

Service Tables

Mode No.			Function	Settings
Class 1 and 2	**Class 3**			
4-011*		Side-to-side Registration	Adjusts the side-to-side registration for scanning in platen mode. *(–): The image disappears at the left side.* *(+): The image appears.* *Use the OK key to toggle between + and - before entering the value. The specification is 2 ± 1.5 mm. See "Replacement and Adjustment - Copy Adjustment" for details.*	– 9.0 ~ + 6.0 0.1 mm/step **0.0 mm**
4-012*	1	Erase Margin (Leading Edge)	Adjusts the leading edge margin for scanning. *Do not adjust this unless the user wishes to have a scanner margin that is greater than the printer margin.*	0 ~ 9.0 0.1 mm/step **1.0 mm**
	2	Erase Margin (Trailing Edge)	Adjusts the trailing edge margin for scanning. *Do not adjust this unless the user wishes to have a scanner margin that is greater than the printer margin.*	0 ~ 9.0 0.1 mm/step **1.0 mm**
	3	Erase Margin (Left Side)	Adjusts the left side margin for scanning. *Do not adjust this unless the user wishes to have a scanner margin that is greater than the printer margin.*	0 ~ 9.0 0.1 mm/step **1.0 mm**
	4	Erase Margin (Right Side)	Adjusts the right side margin for scanning. *Do not adjust this unless the user wishes to have a scanner margin that is greater than the printer margin.*	0 ~ 9.0 0.1 mm/step **1.0 mm**
4-013		Scanner Free Run	Performs a scanner free run with the exposure lamp on. *After selecting "1", press "OK" or the # key twice to start this feature. Press the C/S (Clear/Stop) key to stop.*	**0: No** 1: Yes
4-015*	1	White Plate Scanning (Start Position)	Adjusts the scanning start position on the white plate for auto shading. *The default is 6 mm from the leading edge. The setting specifies how far scanning starts from the default position.*	– 3.0 ~ + 3.0 0.1 mm/step **0.0 mm**

Mode No.			Function	Settings
Class 1 and 2	**Class 3**			
4-015*	2	White Plate Scanning (Scanning Area)	Adjusts the width of the area on the white plate (in the sub scan direction) that is scanned for auto shading. *The default is 5 mm. The current setting specifies the difference from this default.*	– 3.0 ~ + 3.0 0.1 mm/step **0.0 mm**
4-101*		Sub Scan Magnification	Adjusts the magnification in the sub scan direction for scanning. If this value is changed, the scanner motor speed is changed. *Use the +/- key to toggle between + and - before entering the value. The specification is ± 0.5%. See "Replacement and Adjustment - Copy Adjustment" for details.*	– 0.9 ~ + 0.9 0.1%/step **0.0%**
4-301		APS Data Display	Displays the status of the APS sensors and platen/DF cover sensor. *See "APS and Platen/ADF Cover Sensor Output Display" after the SP mode table.*	
4-303*		APS Small Size Original	Selects whether the copier determines that the original is A5 size when the APS sensor cannot detect the size. *If "A5 lengthwise" is selected, paper sizes that cannot be detected by the APS sensors are regarded as A5 lengthwise. If "Not detected" is selected, "Cannot detect original size" will be displayed.*	**0: No (Not detected)** 1: Yes (A5 lengthwise)
4-403*		Image Mode Selection	This is for the designer's test purposes. ***Do not change the value.***	**0: No** 1: Yes
4-412*		IPU Image Data Path	Selects one of the following video data outputs, which will be used for printing. 0. N: Normal video processing 1. S: After auto shading processing 2. M: After magnification processing 3. F: After MTF processing 4. G: After gamma correction 5. T: Data straight through (no video processing) ***Do not change the value.***	

Mode No.			Function	Settings
Class 1 and 2	**Class 3**			
4-417		IPU/SBU Test Pattern	Prints test patterns from the IPU or SBU video data outputs. (1 ~ 13: IPU, 14 ~ 16: SBU) 0. No Print 1. Vertical Line - 1 dot 2. Horizontal Line - 1 dot 3. Vertical Line - 2 dot 4. Horizontal Line - 2 dot 5. Alternating Dot Pattern 6. Grid Pattern - 1 dot 7. Vertical Bands 8. Grayscale - Horizontal 9. Grayscale - Vertical 10. Patch Pattern 11. Cross Pattern 12. Slant Pattern 13. Trimming Area 14. Vertical Line - 2 dot 15. Grid Pattern - 2 dot 16. 16-grayscale	
			Change to the copy mode display by pressing the ◁ (Interrupt) key, then print the test pattern.	
4-902		Exposure Lamp ON	Turns on the exposure lamp.	**0: No (Off)** 1: Yes (On)
			To turn off the exposure lamp, select "0".	
4-904	1*	SBU Gain Adjustment (EVEN)	Checks the difference value of the black level for the EVEN channel after adjusting the black level at power-up.	0 ~ 255 1/step **40**
			***Do not change the value**.* *However, after performing the memory all clear (SP5-801), use it to re-input the previous value.*	
	2*	SBU Gain Adjustment (ODD)	Checks the difference value of the black level for the ODD channel after adjusting the black level at power-up.	0 ~ 255 1/step **40**
			Do not change the value. *However, after performing the memory all clear (SP5-801), use it to re-input the previous value.*	
	3	SBU Gain Adjustment (Adjusted EVEN)	Checks the difference value of the black level for the EVEN channel after adjusting the black level at SBU Auto Adjustment (SP4-908).	0 ~ 255 1/step **40**
			Do not change the value.	
	4	SBU Gain Adjustment (Adjusted ODD)	Checks the difference value of the black level for the ODD channel after adjusting the black level at SBU Auto Adjustment (SP4-908).	0 ~ 255 1/step **40**
			Do not change the value.	

Mode No.			Function	Settings
Class 1 and 2	**Class 3**			
4-905*	1	SBU DC Cont Adjustment (EVEN)	Adjusts the coefficient of the D/A converter for the AGC gain curve for DC cont for the EVEN channel. ***Do not change the value.*** *However, after performing the memory all clear (SP5-801), use it to re-input the previous value.*	0 ~ 255 1/step **25**
	2	SBU DC Cont Adjustment (ODD)	Adjusts the coefficient of the D/A converter for the AGC gain curve for DC cont for the ODD channel. ***Do not change the value.*** *However, after performing the memory all clear (SP5-801), use it to re-input the previous value.*	0 ~ 255 1/step **25**
4-906	1	SBU Ref. Value Adjustment (Current Value)	Adjusts the coefficient of the D/A converter for the AGC gain curve for scanning the white plate. ***Do not change the value.***	0 ~ 255 1/step **147**
	2	SBU Ref. Value Adjustment (Loop)	Displays the number of convergences for SBU reference control. ***Do not use in the field.***	0 ~ 255 1/step **147**
4-907*	1	SBU Offset Value Adjustment (EVEN)	Adjusts the coefficient of the D/A converter for the offset (Z/C) for the analog image data processing for EVEN. ***Do not change the value.*** *However, after performing the memory all clear (SP5-801), use it to re-input the previous value.*	0 ~ 255 1/step **180**
	2	SBU Offset Value Adjustment (ODD)	Adjusts the coefficient of the D/A converter for the offset (Z/C) for the analog image data processing for ODD. ***Do not change the value.*** *However, after performing the memory all clear (SP5-801), use it to re-input the previous value.*	0 ~ 255 1/step **180**
4-908		SBU Auto Adjustment	Performs the auto scanner adjustment. *Using this SP mode after replacing the white plate or erasing the memory on the BICU board. See "Replacement and Adjustment - Standard White Density Adjustment" for details on how to do this.*	**0: No (Normal operation)** 1: Yes (Start the adjustment)
4-909		SBU AE Cont Adjustment	Adjusts the background density when ADS mode is not being used. ***Do not change the value.***	0 ~ 255 1/step **209**

Service Tables

Mode No.			Function	Settings
Class 1 and 2	**Class 3**			
4-910*		Scanner Motor Control	Selects the scanner motor control method. *If "1" is selected, the current for the scanner motor will be reduced and jitter copy image problems will be alleviated. However, copy speed will be reduced.* ***Normally do not change the value.***	**0: Normal** 1: Special
4-913*		DF Shading Interval Time	Adjusts the interval for shading processing in DF mode. *Light and heat may affect the scanner response. If copy quality indicates that white level is drifting during a DF copy job, reduce this setting. This setting is only effective when the setting of SP4-950 is "ADAM".*	0 ~ 60 1 s/step **30 s**
4-915*	1	P - MTF Coefficient (Text Main 50%~95%)	**This adjustment is only effective for the "Service Mode" original type setting.** Selects the MTF filter coefficient. See "Detailed Descriptions - Image Processing" for details. T/P: Text/Photo	0 ~ 15 1/step **1**
	2	P - MTF Coefficient (Text Main 96%~125%)		0 ~ 15 1/step **1**
	3	P - MTF Coefficient (Text Main 126%~159%)		0 ~ 15 1/step **3**
	4	P - MTF Coefficient (Text Main 160%~200%)		0 ~ 15 1/step **4**
	5	P - MTF Coefficient (Text Sub 50%~95%)		0 ~ 13 1/step **2**
	6	P - MTF Coefficient (Text Sub 96%~125%)		0 ~ 13 1/step **2**
	7	P - MTF Coefficient (Text Sub 126%~159%)		0 ~ 13 1/step **3**
	8	P - MTF Coefficient (Text Sub 160%~200%)		0 ~ 13 1/step **4**
	9	P - MTF Coefficient (T/P Main 50%~89%)		0 ~ 15 1/step **3**
	10	P - MTF Coefficient (T/P Main 90%~95%)		0 ~ 15 1/step **3**
	11	P - MTF Coefficient (T/P Main 96%~125%)		0 ~ 15 1/step **1**
	12	P - MTF Coefficient (T/P Main 126%~159%)		0 ~ 15 1/step **1**

Mode No.			Function	Settings
Class 1 and 2	Class 3			
4-915*	13	P - MTF Coefficient (T/P Main 160%~200%)	**This adjustment is only effective for the "Service Mode" original type setting.** Selects the MTF filter coefficient. See "Detailed Descriptions - Image Processing" for details. T/P: Text/Photo	0 ~ 15 1/step **1**
	14	P - MTF Coefficient (T/P Sub 50%~89%)		0 ~ 13 1/step **3**
	15	P - MTF Coefficient (T/P Sub 90%~95%)		0 ~ 13 1/step **3**
	16	P - MTF Coefficient (T/P Sub 96%~125%)		0 ~ 13 1/step **2**
	17	P - MTF Coefficient (T/P Sub 126%~159%)		0 ~ 13 1/step **2**
	18	P - MTF Coefficient (T/P Sub 160%~200%)		0 ~ 13 1/step **2**
4-916*	1	P - MTF Strength (Text Main 50%~95%)	**This adjustment is only effective for the "Service Mode" original type setting.** Selects the MTF strength using grayscale processing. See "Detailed Descriptions - Image Processing" for details. Weak Strength 1-2-3-4-5-0(x1)-6-7 T/P: Text/Photo	0 ~ 7 1/step **4**
	2	P - MTF Strength (Text Main 96%~125%)		0 ~ 7 1/step **5**
	3	P - MTF Strength (Text Main 126%~159%)		0 ~ 7 1/step **5**
	4	P - MTF Strength (Text Main 160%~200%)		0 ~ 7 1/step **5**
	5	P - MTF Strength (Text Sub 50%~95%)		0 ~ 7 1/step **4**
	6	P - MTF Strength (Text Sub 96%~125%)		0 ~ 7 1/step **5**
	7	P - MTF Strength (Text Sub 126%~159%)		0 ~ 7 1/step **5**
	8	P - MTF Strength (Text Sub 160%~200%)		0 ~ 7 1/step **5**
	9	P - MTF Strength (T/P Main 50%~89%)		0 ~ 7 1/step **3**
	10	P - MTF Strength (T/P Main 90%~95%)		0 ~ 7 1/step **3**
	11	P - MTF Strength (T/P Main 96%~125%)		0 ~ 7 1/step **5**

Mode No.			Function	Settings
Class 1 and 2	Class 3			
4-916*	12	P - MTF Strength (T/P Main 126%~159%)	**This adjustment is only effective for the "Service Mode" original type setting.** Selects the MTF strength using grayscale processing. See "Detailed Descriptions - Image Processing" for details. Weak Strength 1-2-3-4-5-0(x1)-6-7 T/P: Text/Photo	0 ~ 7 1/step **5**
	13	P - MTF Strength (T/P Main 160%~200%)		0 ~ 7 1/step **5**
	14	P - MTF Strength (T/P Sub 50%~89%)		0 ~ 7 1/step **3**
	15	P - MTF Strength (T/P Sub 90%~95%)		0 ~ 7 1/step **3**
	16	P - MTF Strength (T/P Sub 96%~125%)		0 ~ 7 1/step **5**
	17	P - MTF Strength (T/P Sub 126%~159%)		0 ~ 7 1/step **5**
	18	P - MTF Strength (T/P Sub 160%~200%)		0 ~ 7 1/step **5**
4-917*	1	P - Independent Dot Erase (Text)	**This adjustment is only effective for the "Service Mode" original type setting.** *Selects the independent dot erase level. See "Detailed Descriptions - Image Processing" for details. With a larger SP setting, more dots are detected as independent dots and erased. However, dots in mesh-like images may be detected as independent dots mistakenly. If "0" is selected, independent dot erase is disabled.*	0 ~ 7 1/step **3**
	2	P - Independent Dot Erase (Text/Photo)		
4-918*	1	P - White Line Erase (Text)	**This adjustment is only effective for the "Service Mode" original type setting.** *Selects whether or not white line erase is done. See "Detailed Descriptions - Image Processing" for details.*	0: No **1: Yes**
	2	P - White Line Erase (Text/Photo)		
	3	P - White Line Erase (Photo)		
4-919*	1	P - Black Line Erase (Text)	**This adjustment is only effective for the "Service Mode" original type setting.** *Selects the black line erase level. See "Detailed Descriptions - Image Processing" for details.*	0: Disable **1: Strong** 2: Weak
	2	P - Black Line Erase (Text/Photo)		
	3	P - Black Line Erase (Photo)		

Mode No.			Function	Settings
Class 1 and 2	**Class 3**			
4-921*	1	P - Smoothing - Main Scan (Text)	**This adjustment is only effective for the "Service Mode" original type setting.** *Selects the smoothing pattern for the small filter used to remove moiré. (0: Weak, 1: Normal, 2: Strong, 3: Disabled). See "Detailed Descriptions - Image Processing" for details.* ***Normally do not change the value.***	0: Pat-1 **1: Pat-2** 2: Pat-3 3: Through (Disable)
	2	P - Smoothing - Main Scan (Text/Photo)		
4-922*	1	P - Binary Selection (Text)	**This adjustment is only effective for the "Service Mode" original type setting.** *Selects the thresholding type used during gradation processing (dynamic or constant). See "Detailed Description - Image Processing" for details.* ***Normally do not change the value.***	**0: Dynamic** 1: Static
	2	P - Binary Selection (Text/Photo)		0: Dynamic **1: Static**
4-923*		P - Binary Threshold	Adjusts the constant threshold used during gradation processing. **This adjustment is only effective for the "Text - Service Mode" original type setting.** *If "Static" is selected with SP4-922-1, this SP is effective. See "Detailed Descriptions - Image Processing" for details.*	0 ~ 255 1/step **96**
4-924*		P – Binary Threshold - MAX	Adjusts the maximum value of the dynamic binary threshold used during gradation processing. **This adjustment is only effective for the "Text - Service Mode" original type setting.** *If "Dynamic Binary" is selected with SP4-922-1, this SP is effective. See "Detailed Descriptions - Image Processing" for details.*	0 ~ 255 1/step **160**
4-925*		P – Binary Threshold - MIN	Adjusts the minimum value of the dynamic binary threshold used during gradation processing. **This adjustment is only effective for the "Text - Service Mode" original type setting.** *If "Dynamic Binary" is selected with SP4-922-1, this SP is effective. See "Detailed Descriptions - Image Processing" for details.*	0 ~ 255 1/step **96**

Mode No.			Function	Settings
Class 1 and 2	**Class 3**			
4-926*		P - Binary Threshold - Center	Adjusts the threshold in dynamic binary mode for pixels not on edges of text/graphic elements. **This adjustment is only effective for the "Text - Service Mode" original type setting.** *If "Dynamic Binary" is selected with SP4-922-1, this mode is enabled. See "Detailed Descriptions - Image Processing" for details.*	0 ~ 255 1/step **96**
4-927*	1	P - Smoothing Filter (50%~89%)	**This adjustment is only effective for the "Service Mode" original type setting for Photo mode.** Adjusts the smoothing filter level. If "0" is selected, smoothing is disabled. See "Detailed Descriptions - Image Processing" for details.	0 ~ 8 1/step **7** 1: Weakest 8: Strongest
	2	P - Smoothing Filter (90%~95%)		
	3	P - Smoothing Filter (96%~125%)		
	4	P - Smoothing Filter (126%~159%)		
	5	P - Smoothing Filter (160%~200%)		
4-928*	1	P - Scanner Gamma (Text)	**This adjustment is only effective for the "Service Mode" original type setting.** Selects the scanner gamma curve. If "0" is selected, the scanner gamma curve is either ADS or Non ADS, depending on the selected original mode (text, photo, etc.). See "Detailed Descriptions - Image Processing" for details. **Normally do not change the value.**	0: By key (as selected) 1: ADS 2: Non-ADS **3: Linear** 4: SP
	2	P - Scanner Gamma (Text/Photo)		**0: By key (as selected)** 1: ADS 2: Non-ADS 3: Linear 4: SP
	3	P - Scanner Gamma (Photo)		**0: By key (as selected)** 1: ADS 2: Non-ADS 3: Linear 4: SP
4-929*	1	P - Matrix Filter (Text/Photo)	Selects the error diffusion matrix filter in text/photo mode (this SP is used only with dynamic thresholding). **This adjustment is only effective for the "Service Mode" original type setting.** *See "Detailed Descriptions - Image Processing" for details.* **Normally do not change the value.**	**6: No.1** 7: No.2

Mode No.			Function	Settings
Class 1 and 2	**Class 3**			
4-929*	2	P - Matrix Filter (Photo)	Selects the dither matrix filter in photo mode. A larger number increases the number of gradations, but may reduce the contrast. 5: Error diffusion (same as matrix No 1 in 4-929-1) - reproduction of fine lines is emphasized **This adjustment is only effective for the "Service Mode" original type setting.** *See "Detailed Descriptions - Image Processing" for details.*	0: 53 **1: 105** 2: 143 3: 210 4: 270 5: H
4-931*		P - Edge Threshold - Vertical	Adjusts the threshold for edge detection in the vertical direction for dynamic thresholding. **This adjustment is only effective for the "Text - Service Mode" original type setting.** *If "Dynamic Binary" is selected with SP4-922-1, this SP mode is effective. See "Detailed Descriptions - Image Processing" for details.* **Normally do not change the value.**	0 ~ 255 1/step **63**
4-932*		P - Edge Threshold - Horizontal	Adjusts the threshold for edge detection in the horizontal direction for dynamic thresholding. **This adjustment is only effective for the "Text - Service Mode" original type setting.** *If "Dynamic Binary" is selected with SP4-922-1, this SP mode is effective. See "Detailed Descriptions - Image Processing" for details.* **Normally do not change the value.**	0 ~ 255 1/step **63**
4-933*		P - Edge Threshold - Right	Adjusts the threshold for edge detection in the diagonal direction from top right to bottom left (for dynamic thresholding). **This adjustment is only effective for the "Text - Service Mode" original type setting.** *If "Dynamic Binary" is selected with SP4-922-1, this SP mode is effective. See "Detailed Descriptions - Image Processing" for details.* **Normally do not change the value.**	0 ~ 255 1/step **63**

Mode No.			Function	Settings
Class 1 and 2	**Class 3**			
4-934*		P - Edge Threshold - Left	Adjusts the threshold for edge detection in the diagonal direction from top left to bottom right (for dynamic thresholding). **This adjustment is only effective for the "Text - Service Mode" original type setting.** *If "Dynamic Binary" is selected with SP4-922-1, this SP mode is effective. See "Detailed Descriptions - Image Processing" for details.* **Normally do not change the value.**	0 ~ 255 1/step **63**
4-935*	1	P - Line Width Correction (Text)	**This adjustment is only effective for the "Service Mode" original type setting.** Adjusts the line width (1: Produces the thinnest lines, 7: Produces the thickest lines) If "0" is selected, this mode is disabled. See "Detailed Descriptions - Image Processing" for details.	0 ~ 7 1/step **0**
	2	P - Line Width Correction (Text/Photo)		0 ~ 7 1/step **6**
	3	P - Line Width Correction (Photo)		0 ~ 7 1/step **0**
4-936*	1	P - SBU ADS Setting (Text)	**This adjustment is only effective for the "Service Mode" original type setting.** *Selects whether the SBU ADS process is done. If "0" is selected, it depends on whether the user selects ADS at the operation panel.* See "Detailed Descriptions - Image Processing" for details. **Normally do not change the value.**	**0: By key** 1: ON 2: OFF
	2	P - SBU ADS Setting (Text/Photo)		
	3	P - SBU ADS Setting (Photo)		
4-937*	1	P - IPU ADS Setting (Text)	**This adjustment is only effective for the "Service Mode" original type setting.** *Selects whether the IPU ADS process is done. If "0" is selected, it depends on whether the user selects ADS at the operation panel. The value of SP4-938 is subtracted from the white video level.* See "Detailed Description - Image Processing" for details. **Normally do not change the value.**	**0: By key** 1: ON 2: OFF
	2	P - IPU ADS Setting (Text/Photo)		
	3	P - IPU ADS Setting (Photo)		

Mode No.			Function	Settings
Class 1 and 2	**Class 3**			
4-938*	1	P - IPU ADS Adjustment (Text)	**This adjustment is only effective for the "Service Mode" original type setting.** *Decides how much is subtracted from the white video level. In SP4-937, if "By key" is selected and the user selects ADS mode, or if "ON" is selected, this value is subtracted from the white video level.* See "Detailed Description - Image Processing" for details. **Normally do not change the value.**	0 ~ 15 1/step **8**
	2	P - IPU ADS Adjustment (Text/Photo)		
	3	P - IPU ADS Adjustment (Photo)		
4-939*		P - Binary Filter	Selects the binary filter for the independent dot erase that is done after image processing in text mode. **This adjustment is only effective for the "Service Mode" original type setting for text mode.** *If "0" is selected this mode is disabled. See "Detailed Descriptions - Image Processing" for details.*	**0: Non** 1: 3 x 3 2: 4 x 4 3: 5 x 5
4-940*	1	P - ID Gamma Adjustment (Text)	Selects the ID gamma curve. **This adjustment is only effective for the "Service Mode" original type setting.** *See "Detailed Descriptions - Image Processing" for details.* **Normally do not change the value.**	**0: B&W (Sharp text)** 1: Linear (Normal text)
	2	P - ID Gamma Adjustment (Text/Photo)	Selects the ID gamma curve for error diffusion. **This adjustment is only effective for the "Service Mode" original type setting.** *See "Detailed Descriptions - Image Processing" for details.* **Normally do not change the value.**	1: Norm (Text) 2: ch (Text Priority) 3**: ph (Photo Priority)** 4: ph2 (Glossy Photo)
	3	P - ID Gamma Adjustment (Photo)	Selects the ID gamma curve for dithering. **This adjustment is only effective for the "Service Mode" original type setting.** *See "Detailed Descriptions - Image Processing" for details.* **Normally do not change the value.**	5: 53 (Coarse Print) **6: 105 (Press Print)**
4-941*	1	P - Positive/Negative (Text)	This is for the designer's test purposes. ***Do not change the value.***	**0: No** 1: Yes
	2	P - Positive/Negative (Text/Photo)		
	3	P - Positive/Negative (Photo)		

Mode No.			Function	Settings
Class 1 and 2	Class 3			
4-942*		White Line Erase	Selects whether or not white line erase is done (without "Service Mode"). *See "Detailed Descriptions - Image Processing" for details.*	**0: Normal** 1: Disable
4-943*		Black Line Erase	Selects the black line erase level (without "Service Mode"). *See "Detailed Descriptions - Image Processing" for details.*	**0: Strong** 1: Disable 2: Weak
4-944*		Independent Dot Erase	Selects whether or not independent dot erase is done (without "Service Mode"). *See "Detailed Descriptions - Image Processing" for details.*	**0: Normal** 1: Disable
4-950*		Shading Mode Selection	Selects the scanner shading method in DF mode. 1. Stinger (Do the shading every page.) 2. ADAM (Do the shading at the time specified by SP4-913.) 3. None (This is for the designer's test purposes. Do not select this value.) *This is for the designer's test purposes.* ***Do not change the value.***	
5-001		All Indicators On	Turns on all indicators on the operation panel. *Press "OK" or the # key to check. Press the Clear Modes key to exit this SP mode. The LCD blinks all on and all off every 2 seconds.*	
5-103*		Auto Paper Tray Shift	Selects whether or not auto paper tray shift is done.	0: No **1: Yes**
5-104*		A3/DLT Double Count	Specifies whether the counter is doubled for A3/11" x 17" paper. *If "Yes" is selected, the total counter (mechanical counter) and the current user code counter counts up twice when A3/11" x 17" paper is used.*	**0: No** 1: Yes
5-106*		ADS Level Selection	Selects the image density level that is used in ADS mode.	1 ~ 7 1 notch/step **4**
5-113*		Option Counter Type	Selects the optional counter type. *After installing the optional key counter, this SP must be set to "1".*	**0: Non** 1: Key Counter
5-116*		Key Counter Up Timing	Determines whether the total counter counts up at paper feed-in or at paper exit.	0: **Feed In** 1: Exit
5-120*		Opt. Counter Reset Setting	**This SP is for Japan only. Do not change the value.**	**0: Yes** 1: Stand-by 2: Non

Mode No.			Function	Settings
Class 1 and 2	**Class 3**			
5-401*	1	User Code Mode (Copier)	Selects whether the user code feature is enabled in copy mode or not. *If this value is changed, the user tool setting is also changed.*	**0: No** 1: Yes
	2	User Code Mode (Fax)	Selects whether the user code feature is enabled in fax mode or not. *If this value is changed, the user tool setting is also changed.*	**0: No** 1: Yes
	3	User Code Mode (Printer)	Selects whether the user code feature is enabled in printer mode or not. *If this value is changed, the user tool setting is also changed.*	**0: No** 1: Yes
5-504*		Jam Alarm Setting	**This SP is for Japan only. Do not change the value.**	
5-507*	1	Paper/Toner Alarm (Paper)	**This SP is for Japan only. Do not change the value.**	
	2	Paper/Toner Alarm (Toner)		
5-508*	1	CE Call (Jam Level 1)	**This SP is for Japan only. Do not change the value.**	
	2	CE Call (Jam Level 2)		
	3	CE Call (Door Open)		
5-801		Memory All Clear	Resets all software counters. Also, returns all modes and adjustments to the default settings. See the "Memory All Clear" section for how to use this SP mode correctly. ***Normally, this SP mode should not be used.*** *It is used only after replacing the NVRAM or when the copier malfunctions due to a damaged NVRAM.*	
5-802		Free Run	Performs a free run for both the scanner and the printer. *After selecting "1", press "OK" or the # key twice to start this feature. Press the C/S (Clear/Stop) key to stop.*	**0: No** 1: Yes
5-803		Input Check	Displays signals received from sensors and switches. *Press the Clear Modes key to exit the program. See the "Input Check" section for details.*	
5-804		Output Check	Turns on electrical components individually for test purposes. *See the "Output Check" section for details.*	

Mode No.			Function	Settings
Class 1 and 2	**Class 3**			
5-808*		Display Language	Selects the display language. See "Display language" for details.	
5-809*		mm/inch Selection	Selects whether mm or inches are used in the display.	0: mm (Europe/Asia model) 1: inch (American model)
5-810		SC Code Reset	Resets any service call condition. After performing this SP mode, turn the machine main switch off and on. *See "Troubleshooting - Service Call Conditions" for how to use this mode. If the reset was successful, the beeper will sound 5 times. If it failed, the beeper will sound only twice.*	**0: No** 1: Yes
5-811		Serial Number Input	Use to input the machine serial number. (Normally done at the factory.) *This serial number will be printed on the system parameter list. See the "Serial Number Input" section for details.*	
5-812*	1	Service Telephone Number (Telephone)	Use this to input the telephone number of the service representative (this is displayed when a service call condition occurs). *Press the # key if you need to input a pause (–). Press the C (Clear/Stop) key to delete the telephone number.*	
	2	Service Telephone Number (Facsimile)	Use this to input the fax number of the service representative (this is displayed when a service call condition occurs). *Press the # key if you need to input a pause (–). Press the C (Clear/Stop) key to delete the telephone number.*	
5-816*		CSS Function	**This SP is for Japan only. Do not change the value.**	
5-817	1	CE Start/Finish Call (CE Start Call)	**This SP is for Japan only. Do not change the value.**	
	2	CE Start/Finish Call (CE Finish Call)		
5-821		CSS-PI Device Code	**This SP is for Japan only. Do not change the value.**	

Mode No.			Function	Settings
Class 1 and 2	**Class 3**			
5-824		NVRAM Data Upload	Uploads SP and UP mode data (except for counters and the serial number) from the flash memory on the BICU board to a flash memory card. *This SP can be used when a flash memory card is plugged into the machine. See the "NVRAM Data Upload" section for details.*	**0: No** 1: Yes
5-825		NVRAM Data Download	Downloads SP mode data from a flash memory card to the flash memory on the BICU board. *This SP can be used when a flash memory card is plugged into the machine. See the "NVRAM Data Download" section for details.*	**0: No** 1: Yes
5-826		Program Upload	Uploads the system program from the flash memory on the BICU board to a flash memory card. *This SP can be used when a flash memory card is plugged into the machine. See the "Program Upload" section for details.*	**0: No** 1: Yes
5-827		Program Download	Downloads the system program from a flash memory card to the flash memory on the BICU board. *This SP can be used when a flash memory card is plugged into the machine. See the "Program Download" section for details.*	**0: No** 1: Yes
5-901		Printer Free Run	Performs a printer free run. *After selecting "1", press "OK" or the # key twice to start this feature. Press the C/C (Clear/Stop) key to stop.*	**0: No** 1: Yes
5-902		Test Pattern Print	Prints a test pattern. *See the "Test Pattern Printing" section for how to print a test pattern.* *Change to the copy mode display by pressing the Interrupt key, then print out the test pattern.*	
5-903*		LCD Contrast Adjustment	Adjusts the contrast of the LCD on the operation panel.	0 ~ 7 1 /step **3**
5-904*		Auto Off Timer Setting	Adjusts the auto off mode timer. *If this value is changed, the user tool setting is also changed.*	1 ~ 240 1 min/step **30 min**
5-905*		CSS 25 Hours Off Detection	**This SP is for Japan only. Do not change the value.**	

Mode No.			Function	Settings
Class 1 and 2	**Class 3**			
5-906*		Exhaust Fan Control Timer	Inputs the fan control timer for energy saver mode. *The fan slows down after this time has passed since the end of a job* *The fan stops after this time has passed since any of the following conditions occurred:* *After entering sleep mode (fax/printer installed)* *After entering an SC condition.*	
5-907		Plug & Play Setting	Selects the brand name and the production name for the Plug and Play function of Windows 95/98. These are registered in the NVRAM. If the NVRAM is defective, these names should be registered again. *Press down the "Photo mode" key and the "OK" key or # key at the same time to register the setting. If the setting was successful, the beeper will sound 5 times. If it failed, the beeper will sound only twice.*	
5-908*		Maintenance LED Display	Selects whether the maintenance LED blinks when the PM interval expires. *When installing the machine, if the customer requires that the maintenance LED blinks, select "Yes". The PM alarm interval is set with SP5-912.*	**0: No** 1: Yes
5-911*		APS A4/LT Sideways Priority	Specifies whether the machine selects LT sideways paper if the original is A4. In inch models, if "Yes" is selected, LT sideways is selected automatically when the APS sensors detect an A4 sideways original. In mm models, if "Yes" is selected, A4 sideways is selected automatically when the APS sensors detect an LT sideways original.	**0: No** 1: Yes
5-912*		Maintenance Alarm Interval	Inputs the PM alarm interval. *When the machine reaches the value, the Maintenance LED will light to inform the user. The value is used SP5-908.*	1 ~ 255 1 k sheets/step **100 k sheets**
5-913		UP Mode Data Reset	Resets the user tool data. *Except for the user codes, key operator code, and key operator printer counter.*	**0: No** 1: Yes
5-914*		Printer Counter Display	Selects whether the printer counter is displayed in the LCD or not. *If this is "0", it does not display or print out in the counter print out.*	**0: No** 1: Yes
5-925		Serial Number Display	Displays the serial number.	

Mode No.			Function	Settings
Class 1 and 2	**Class 3**			
5-930*		Fax Forwarding Mode	Selects whether the fax mode key is accepted when an SC has occurred. *When an SC occurs while there are received fax messages in the SAF memory, change the value to "1". Then access facsimile mode. Then forward the incoming data to another fax machine by using the fax mode bit switches.*	**0: No** 1: Yes
5-940*		Image Rotation Mode	Selects whether the image can be rotated or not.	**0: Enabled** 1: Disabled
5-944*		APS Mode Setting	Selects whether APS mode is selected as the power-up default.	0: Disabled **1: Enabled**
5-946*		Auto Off Disabling	Selects whether auto shut off is disabled when there are sheets in the exit tray. *If the LED does not light when paper enters the tray, the user cannot see easily if paper is there or not.* *1: For machines with no fax/printer option, the machine does not do auto shut off (with the fax/printer option, the machine will go to sleep mode but the LED still works).* *0: For machines with a fax/printer option, the machine does not light the exit tray LED even in sleep mode.*	**0: No** 1: Yes
5-950*		By-pass LG Size Detection	Selects whether the machine can detect LG paper or not in the by-pass tray.	0: No **1: Yes**
5-951*		Inter Leaves Count Setting	Selects the interleave count when interleave mode is selected with User Tool (System Settings - Print Priority). In interleave mode, the machine will print 5 pages of one job, then 5 pages of the other job, and so on.	1 ~ 20 1 pages/step **5 pages**
5-991		VRAM Data Download	This is for the designer's test purposes. ***Do not change the value.***	**0: No** 1: Yes
5-992		SMC Printing	Prints the machine status history data list. See the "System Parameter And Data Lists" section for how to print the lists. *"5" is for facsimile transmission.*	1: SP 2: UP 3: Log 4: All 5: Big Font

Mode No.			Function	Settings
Class 1 and 2	**Class 3**			
6-006*	1	ADF Registration (Side-to-Side)	Adjusts the side-to-side registration in the ADF mode. *Use the (•/*) key to toggle between + and - before entering the value. The specification is 2 ± 1.5 mm. See "Replacement and Adjustment - Copy Adjustment" for details.*	–5.5 ~ +9.5 0.1 mm/step **0.0 mm**
	2	ADF Registration (Leading Edge)	Adjusts the leading edge registration in the ADF mode. *Use the (•/*) key to toggle between + and - before entering the value. The specification is 2 ± 1.5 mm. See "Replacement and Adjustment - Copy Adjustment" for details.*	–5.0 ~ +5.0 0.1 mm/step **0.0 mm**
	3	ADF Registration (Trailing Edge)	Adjusts the trailing edge erase margin in the ADF mode. *Use the (•/*) key to toggle between + and - before entering the value. The specification is more than 0.5 mm. See "Replacement and Adjustment - Copy Adjustment" for details.*	–3.0 ~ +3.0 0.1 mm/step **0.0 mm**
6-007*		ADF Sub-scan Magnification	Adjusts the magnification in the sub-scan direction for ADF mode. *Use the (•/*) key to toggle between + and - before entering the value. See "Replacement and Adjustment - Copy Adjustment" for details.*	–0.9 ~ +0.9 0.1%/step **0.0%**
6-009		ADF Free Run	Performs an ADF free run. *After selecting "1", press "OK" or the (#) key twice to start this feature. Press the (C/⊘) (Clear/Stop) key to stop.*	**0: No** 1: Yes
6-010*		Stamp Position Adjustment	Adjusts the stamp position in the sub-scan direction in fax mode.	–10 ~ +10 1 mm/step **0 mm**
6-901		ADF APS Data Display	Displays the status of the original size sensors in the ADF. *See the "DF APS Original Sensor Output Display"section.*	
6-902*		ADF Scanning Method	Selects the original scanning method in ADF mode. ***Do not change the setting.***	**0: Doc (original)** 1: Mag (copy paper size + magnification)
6-910		ADF/Printer Free Run	Performs both an ADF and a printer free run. *After selecting "1", press "OK" or the (#) key twice to start this feature. Press the (C/⊘) (Clear/Stop) key to stop.*	**0: No** 1: Yes

Mode No.			Function	Settings
Class 1 and 2	**Class 3**			
6-911*		Binding Hole Range	Adjusts the maximum binding hole size for originals. If the original set sensor in the ADF detects a gap wider than this, it assumes that a new page has just started to feed in.	0 ~ 20 1 mm/step **12 mm**
7-001*		Total Operation Time	Displays the total operation time (total drum rotation time).	
7-002*	1	Total Original Counter (All Modes)	Displays the total number of scanned originals (all modes).	
	2	Total Original Counter (Copier)	Displays the total number of scanned originals (copy mode only).	
	3	Total Original Counter (Fax)	Displays the total number of scanned originals (fax mode only).	
7-003*	1	Total Print Counter (All Modes)	Displays the total number of prints (all modes).	
	2	Total Print Counter (Copier)	Displays the total number of prints (copier mode).	
	3	Total Print Counter (Fax)	Displays the total number of prints (fax mode).	
	4	Total Print Counter (Printer)	Displays the total number of prints (printer mode).	
7-007*	5	Total Print Counter (A3/DLT)	Displays the total number of prints (A3/11" x 17" mode).	
7-004*		CE Counter Reset	**This SP is for Japan only. Do not change the value.**	
7-101*	1	Copy Counter - Paper Size (A3)	Displays the total number of copies by paper size.	
	2	Copy Counter - Paper Size (B4)		
	3	Copy Counter - Paper Size (A4)		
	4	Copy Counter - Paper Size (B5)		
	5	Copy Counter - Paper Size (DLT)		
	6	Copy Counter - Paper Size (LG)		
	7	Copy Counter - Paper Size (LT)		
	8	Copy Counter - Paper Size (HLT)		
	9	Copy Counter - Paper Size (Others)		
7-102*	1	Copy Counter - By-pass (Special Paper)	Displays the total number of copies made from the by-pass tray, by paper type.	
	2	Copy Counter - By-pass (Thick Paper)		
7-201*		Total Scan Counter	Displays the total number of scanned originals.	

Mode No.			Function	Settings
Class 1 and 2	**Class 3**			
7-204*	1	Copy Counter - Paper Tray (1st)	Displays the total number of copies fed from each paper feed tray.	
	2	Copy Counter - Paper Tray (2nd)		
	3	Copy Counter - Paper Tray (3rd)		
	4	Copy Counter - Paper Tray (By-pass)		
7-205*		Total ADF Counter	Displays the total number of originals fed by the ADF.	
7-301*	1	Copy Counter - Mag. (50%~99%)	Displays the total number of copies by reproduction ratio.	
	2	Copy Counter - Mag. (Full Size)		
	3	Copy Counter - Mag. (101%~200%)		
7-301*	4	Copy Counter - Mag. (Auto Reduce/Enlarge)	Displays the total number of copies for auto reduce/enlarge mode.	
7-304*	1	Copy Counter - Copy Mode (Text)	Displays the total number of copies by copy mode.	
	2	Copy Counter - Copy Mode (Text/Photo)		
	3	Copy Counter - Copy Mode (Photo)		
	4	Copy Counter - Copy Mode (ADF)		
	5	Copy Counter - Copy Mode (Series Copy)	Displays the total number of copies by image editing mode.	
	6	Copy Counter - Copy Mode (Sort)		
	7	Copy Counter - Copy Mode (Combine Originals)		
7-305*	1	Copy Counter - Copy Q'ty (1 to 1)	Displays the total number of series copies.	
	2	Copy Counter - Copy Q'ty (1 to 2 ~ 5)		
	3	Copy Counter - Copy Q'ty (1 to 6 ~ 10)		
	4	Copy Counter - Copy Q'ty (1 to 11 ~ 20)		
	5	Copy Counter - Copy Q'ty (1 to 20 ~ 99)		
7-401*		Total SC Counter	Displays the total number of service calls that have occurred.	
7-402*		Each SC Code Counter	Displays the total number of each service call that has occurred.	**0: No** 1: Yes
7-501*		Total Jam Counter	Displays the total number of jams.	
7-502*		Total Paper Jam Counter	Displays the total number of paper jams.	
7-503*		Total Original Jam Counter	Displays the total number of original jams.	

Mode No.			Function	Settings
Class 1 and 2	**Class 3**			
7-504*	1	Total Jams by Location (A Jam)	Displays the total number of paper jams by location.	
	2	Total Jams by Location (B Jam)		
	3	Total Jams by Location (C Jam)		
	4	Total Jams by Location (R Jam)		
	5	Total Jams by Location (Y Jam)		
	6	Total Jams by Location (1st)		
	7	Total Jams by Location (2nd)		
	8	Total Jams by Location (3rd)		
7-504*	9	Total Jams by Location (By-pass)	Displays the total number of paper jams by location.	
7-801	1	ROM Version/Connection (Main Control)	Displays the ROM version.	
	2	ROM Version/Connection (BiCU)		
	3	ROM Version/Connection (FAX Control)		
	4	ROM Version/Connection (Printer Control)		
	5	ROM Version/Connection (ADF Control)		
	6	ROM Version/Connection (PI)	Displays the whether an option is connected or not. **NOTE:** SP7-801-6 is used only for the Japanese version.	
	7	ROM Version/Connection (Memory)		
	8	ROM Version/Connection (1 Bin Tray)		
	9	ROM Version/Connection (Paper Tray Unit)		
7-807		SC/Jam Counter Reset	Resets the SC and jam counters. *Press down the "Photo mode" key and the "OK" or # key at the same time to reset the counters. If the reset was successful, the beeper will sound 5 times. If it failed, the beeper will sound only twice.*	**0: No** 1: Yes

Mode No.			Function	Settings
Class 1 and 2	**Class 3**			
7-808		Resets Counters	Resets the counters except for the total counter (SP7-003) and the timer counter (SP7-991). *Press down the "Photo mode" key and the "OK" or # key at the same time to reset the counters. If the reset was successful, the beeper will sound 5 times. If it failed, the beeper will sound only twice.*	**0: No** 1: Yes
7-810		Key Operator Code Reset	Resets the key operator code. *Press down the "Photo mode" key and the "OK" or # key at the same time to reset the code. If the reset was successful, the beeper will sound 5 times. If it failed, the beeper will sound only twice.*	**0: No** 1: Yes
7-825		Total Counter Reset	Resets the electrical total counter. *Usually, this SP mode is done at installation. This SP mode is effective only once, when the counter has a negative value. Press down the "Photo mode" key and the "OK" or # key at the same time to reset the counter. If the reset was successful, the beeper will sound 5 times. If it failed, the beeper will sound only twice.*	**0: No** 1: Yes
7-901*		SC History Display	Displays the last twenty SC codes that have occurred.	**0: No** 1: Yes
7-902		SC History Clear	Resets the SC history. *Press down the "Photo mode" key and the "OK" or # key at the same time to reset the counter. If the reset was successful, the beeper will sound 5 times. If it failed, the beeper will sound only twice.*	**0: No** 1: Yes
7-903*		Copy Jam History Display	Displays the copy jams that have occurred.	**0: No** 1: Yes
7-904		Copy Jam History Clear	Resets the copy jam history. *Press down the "Photo mode" key and the "OK" or # key at the same time to reset the counter. If the reset was successful, the beeper will sound 5 times. If it failed, the beeper will sound only twice.*	**0: No** 1: Yes
7-905		Orig. Jam History Display	Displays the original jams that have occurred.	**0: No** 1: Yes

Mode No.			Function	Settings
Class 1 and 2	**Class 3**			
7-906		Orig. Jam History Clear	Resets the original jam history. *Press down the "Photo mode" key and the "OK" or # key at the same time to reset the counter. If the reset was successful, the beeper will sound 5 times. If it failed, the beeper will sound only twice.*	**0: No** 1: Yes
7-907		Timer Counter Reset	Resets the timer counter (SP7-991). *Press down the "Photo mode" key and the "OK" or # key at the same time to reset the counter. If the reset was successful, the beeper will sound 5 times. If it failed, the beeper will sound only twice.*	**0: No** 1: Yes
7-908*		Maintenance Count. Display	Displays the value of the maintenance counter (number of copies since the last PM).	
7-909		Maintenance Count. Reset	Resets the maintenance counter. *Press down the "Photo mode" key and the "OK" or # key at the same time to reset the counter. If the reset was successful, the beeper will sound 5 times. If it failed, the beeper will sound only twice.*	**0: No** 1: Yes
7-991*		Timer Counter Display	Displays the total time that the main switch has been turned on.	

4.2.3 TEST PATTERN PRINTING (SP5-902)

1. Input the level 3 number for the test pattern you need.
2. Press the (Interrupt) key on the display to access the copy mode display.
3. Select the required copy features such as paper size, image density, and reproduction ratio.
4. Press the key to print the test pattern.
5. After checking the test pattern, exit copy mode by pressing the (Interrupt) key again.
6. Exit SP mode.

Test Pattern Table (SP5-902: Test Pattern Printing)

No.	Test Pattern
0	No Print
1	Vertical Lines (single dot)
2	Horizontal Lines (single dot)
3	Vertical Lines (double dots)
4	Horizontal Lines (double dots)
5	Grid Pattern (single dot)
6	Grid Pattern (double dots)
7	Alternating Dot Pattern
8	Full Dot Pattern
9	Black Band
10	Trimming Area
11	Argyle Pattern
12	
13	16 Grayscales (Horizontal)
14	16 Grayscales (Vertical)
15	16 Grayscales (Vert./Hor.)
16	16 Grayscales (Vert./Hor. Overlay)
17	16 Grayscales with white lines (Horizontal)
18	17 Grayscales with white lines (Vertical)
19	18 Grayscales with white lines (Vert./Hor.)
20	

No.	Test Pattern
21	
22	
23	
24	
25	
26	
27	
28	
29	
30	
31	8 Grayscales (Horizontal, Odd)
32	8 Grayscales (Vertical, Odd)
33	8 Grayscales with white lines (Horizontal, Odd)
34	8 Grayscales with white lines (Vertical, Odd)
35	8 Grayscales (Horizontal, Even)
36	8 Grayscales (Vertical, Even)
37	8 Grayscales with white lines (Horizontal, Even)
38	8 Grayscales with white lines (Vertical, Even)
39	
40	

4.2.4 INPUT CHECK (SP5-803)

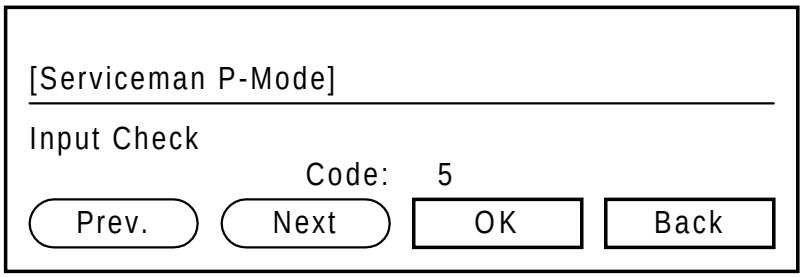

A250M501.WMF

1. Access SP mode 5-803.
2. Select the number that will access the switch or sensor you wish to check (see the table below.
3. Check the status of the sensor or switch.
4. If you wish to check the signal during a copy cycle, select the required copy modes, then press the Start key. After that, re-enter the SP mode to monitor the signal.
5. The LCD panel will display “00H” or “01H”. The meaning of the display is as follows.

Input Check Table

Number	Description	Reading	
		00H	01H
0 ~ 1	Not used		
2	Right door switch - LD5 V	Closed	Opened
3	Right door switch - +24 V	Closed	Opened
4	Vertical transport cover switch	Closed	Opened
5	Tray cover switch (Optional paper tray unit)	Closed	Opened
6	Not used		
7	Bin tray open switch (Optional 1-bin sorter)	Closed	Opened
8 ~ 16	Not used		
17	Vertical transport sensor	Paper not detected	Paper detected
18	Vertical transport sensor (Optional paper tray unit)	Paper not detected	Paper detected
19	Registration sensor	Paper not detected	Paper detected
20	Fusing exit sensor	Paper not detected	Paper detected
21	Exit sensor (Optional 1-bin sorter)	Paper not detected	Paper detected
22 ~ 25	Not used		
26	By-pass tray paper sensor	Paper not detected	Paper detected
27	By-pass paper size sensor	See Table 3	

Number	Description	Reading	
		00H	01H
28 ~ 30	Not used		
31	Paper end sensor	Paper not detected	Paper detected
32	Not used		
33	Paper size switch	See Table 1	
34	Not used		
35	Paper near-end sensor	See Table 4	
36 ~ 40	Not used		
41	Upper paper end sensor (Optional paper tray unit)	Paper not detected	Paper detected
42	Lower paper end sensor (Optional paper tray unit)	Paper not detected	Paper detected
43	Upper paper size switch (Optional paper tray unit)	See Table 2	
44	Lower paper size switch (Optional paper tray unit)	See Table 2	
45	Upper paper height sensor (Optional paper tray unit)	See Table 5	
46	Lower paper height sensor (Optional paper tray unit)	See Table 5	
47	Upper lift sensor (Optional paper tray unit)	Down	Up
48	Lower lift sensor (Optional paper tray unit)	Down	Up
49	Paper sensor (Optional 1-bin sorter)	Paper not detected	Paper detected
50	Exit tray paper sensor	Paper not detected	Paper detected
51 ~ 54	Not used		
55	Paper tray unit set sensor (Optional paper tray unit)	See Table 6	
56	Not used		
57	1-bin sorter installed	Not installed	Installed
58	BICU installed	Not installed	Installed
59 ~ 62	Not used		
63	Fusing unit installed	Not installed	Installed
64 ~ 65	Not used		
66	AIO set sensor	Not set	Set
67	Not used		
68	Toner near end sensor	Toner near end	Toner remains
69 ~ 70	Not used		
71	Main motor lock	Off	On
72	Polygonal mirror motor lock	Off	On
73	Tray motor lock (Optional paper tray unit)	Off	On
74 ~ 75	Not used		
76	Total counter installed	Not installed	Installed
77	Key card installed (Optional key card)	Not installed	Installed

Number	Description	Reading	
		00H	01H
78	Key counter installed (Optional key counter)	Not installed	Installed
79 ~ 89	Not used		
90	DF open sensor (Optional ADF)	Closed	Opened
91	Feed cover open sensor (Optional ADF)	Closed	Opened
92	Original set sensor (Optional ADF)	Paper not detected	Paper detected
93	Registration sensor (Optional ADF)	Paper not detected	Paper detected
94	Original trailing edge sensor (Optional ADF)	Paper not detected	Paper detected
95 ~ 98	Not used		
99	Platen cover sensor	Closed	Opened

Table 1: Paper Size Switch (Main Frame)

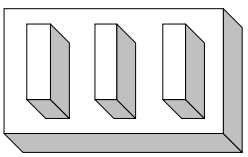

A250M001.WMF

Number	SW 1	SW 2	SW 3	SP Value	Paper Size	
					inches	mm
31	0	0	0	00H	—	
	0	0	1	04H	8 1/2" x 14"	A5 Sideways
	0	1	0	02H	8 1/2" x 13"	
	0	1	1	06H	* (Asterisk)	
	1	0	0	01H	A4 Sideways	
	1	0	1	05H	11" x 8 1/2"	
	1	1	0	03H	8 1/2" x 11"	A4 Lengthwise
	1	1	1	07H	11" x 17"	A3

1: Pushed

Table 2: Paper Size Switch (Optional Paper Tray Unit)

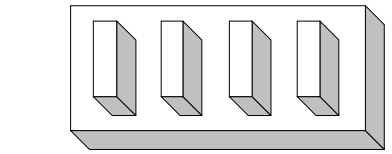

A250M002.WMF

Number	SW 1	SW 2	SW 3	SW 4	SP Value	Paper Size
43, 44	0	0	0	0	00H	—
	0	0	1	0	04H	A4 Sideways
	0	0	1	1	0CH	A4 Lengthwise
	0	1	0	1	0AH	11" x 17"
	0	1	1	1	0EH	11" x 8 1/2"
	1	0	0	0	01H	8 1/2" x 11"
	1	0	1	0	05H	* (Asterisk)
	1	1	0	0	03H	8 1/2" x 14"
	1	1	1	1	0FH	A3

1: Pushed

Table 3: By-pass Paper Size Sensor

Number	SP Value	Paper Size	
		mm	inches
27	01H	A3	11" x 17"
	03H	—	11" x 17"
	02H	A4 Lengthwise	8 1/2" x 11"
	06H	8" x 13"	—
	04H	A5 Lengthwise	5 1/2" x 8 1/2"
	0CH	—	—
	08H	—	—

Table 4: Paper Near-end Sensor (Main Frame)

Number	SP Value	Paper Amount
35	00H	Near-end
	01H	Not near-end

Table 5: Paper Height Sensor (Optional Paper Tray Unit)

Number	SP Value	Paper Amount
45, 46	00H	100%
	01H	70 ~ 75%
	02H	Near-end
	03H	25 ~ 30%

Table 6: Paper Tray Unit Set Sensor

Number	SP Value	Unit Installed
55	00H	None
	20H	Paper tray unit (1 tray)
	30H	Paper tray unit (2 trays)

4.2.5 OUTPUT CHECK (SP5-804)

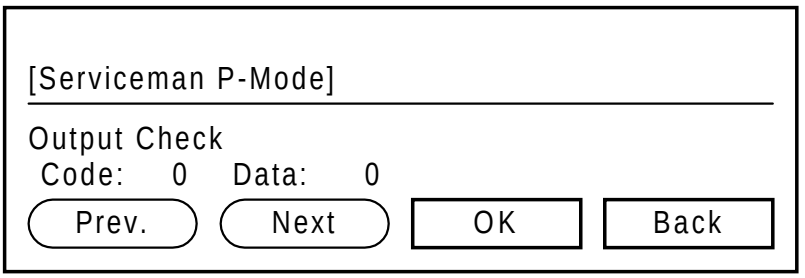

A250M502.WMF

CAUTION: To prevent mechanical or electrical damage, do not keep an electrical component on for a long time.

1. Access SP mode 5-804.
2. Select the SP number that corresponds to the component you wish to check (see the table below), then press "OK" or the # key.
3. Press "1", then press "OK" or the # key to check that component.
4. To interrupt the test, exit the SP mode.
5. If you wish to check another component, re-enter the SP mode.

Output Check Table

NOTE: Pull out the tray before performing the output checks from 29 to 32.

Number	Description
0	Not used
1	Main motor
2	Not used
3	Registration clutch
4 ~ 6	Not used
7	Exhaust fan (High Speed)
8	Exhaust fan (Low Speed)
9 ~ 11	Not used
12	By-pass feed clutch
13	Paper feed clutch
14 ~ 20	Not used
21	Vertical transport clutch
22	Relay clutch (Optional paper tray unit)
23 ~ 25	Not used
26	Upper paper feed clutch (Optional paper tray unit)
27	Lower paper feed clutch (Optional paper tray unit)
28	Tray motor (Optional paper tray unit)
29	Upper lift motor (Up) (Optional paper tray unit)

Number	Description
30	Lower lift motor (Up) (Optional paper tray unit)
31	Upper lift motor (Down) (Optional paper tray unit)
32	Lower lift motor (Down) (Optional paper tray unit)
33 ~ 48	Not used
49	Exit tray LED
50	1-bin tray LED
51	Polygonal mirror motor
52	Polygonal mirror motor and laser diode
53	Laser diode
54	Junction gate solenoid (Optional 1-bin Sorter)
55 ~ 77	Not used
78	Key counter count up (Optional Key Counter)
79 ~ 89	Not used
90	DF transport motor (Optional ADF)
91	DF feed clutch (Optional ADF)
92	DF pick-up solenoid (Optional ADF)
93	Stamp solenoid (Optional ADF)
94 ~ 99	Not used

4.2.6 COPY JAM HISTORY DISPLAY (SP7-903)

After entering the SP mode, select “1” and press the “OK” or # key. The LCD panel will display the following message.

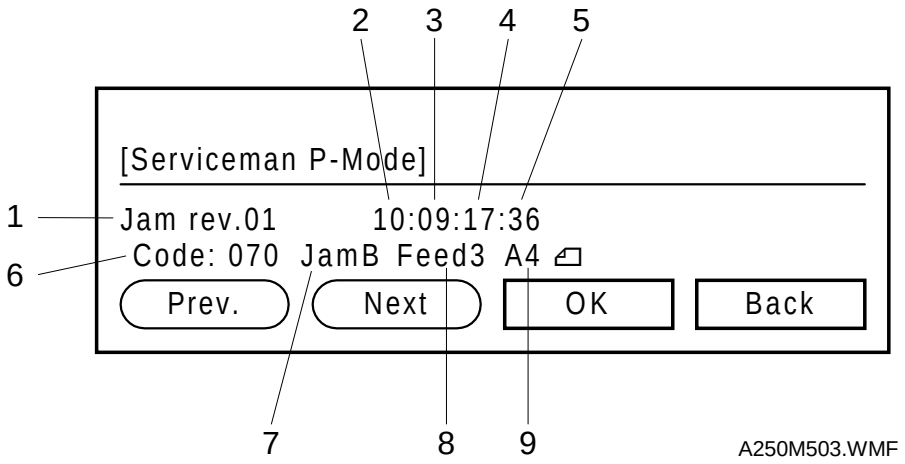

1. Jam history number
2. Main motor operating time: Date
3. Hour
4. Minute
5. Second
6. Jam code (see the table below)
7. Jam location
8. Paper feed station
9. Paper size

Jam Code	Meaning
010	Registration sensor not activated (from paper tray).
030	Vertical transport sensor not activated.
031	Vertical transport sensor (optional paper tray unit) not activated.
050	Registration sensor not activated (from by-pass tray).
070	Registration sensor remained activated by paper.
122	Fusing exit sensor not activated.
123	Fusing exit sensor remained activated by paper.
149	Exit sensor (optional 1-bin sorter) not activated.
150	Exit sensor (optional 1-bin sorter) remained activated by paper.

NOTE: The NVRAM can store data for up to 10 copy jams. If more than 10 copy jams occur, the oldest data is erased.

4.2.7 ORIGINAL JAM HISTORY DISPLAY (SP7-905)

After entering the SP mode, select “1” and press the “OK” or # key. The following message is displayed.

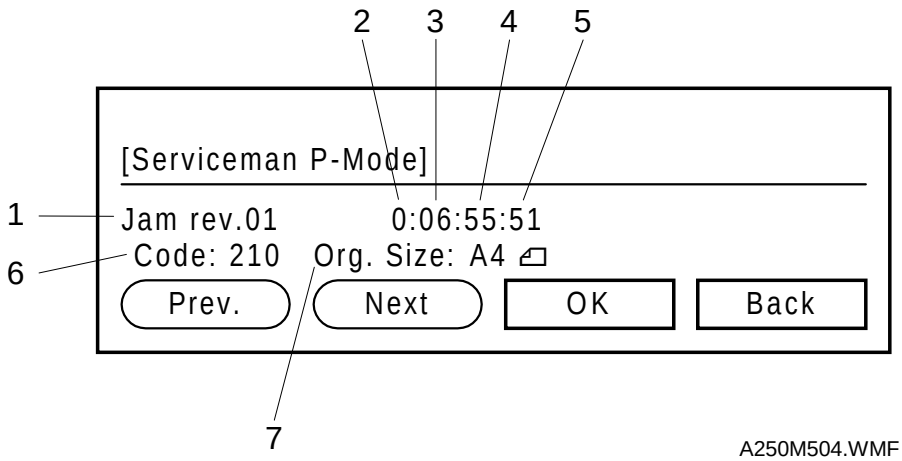

A250M504.WMF

1. Jam history number
2. Main motor operating time: Date
3. Hour
4. Minute
5. Second
6. Jam code (see the table below)
7. Original size

Jam Code	Meaning
210	Registration sensor not activated.
211	Registration sensor remained activated by paper.
216	Registration sensor activated interval between originals is too small.

NOTE: The NVRAM can store data for up to 10 copy jams. If more than 10 copy jams occur, the oldest data will be erased.

4.2.8 SYSTEM PARAMETER AND DATA LISTS (SP5-992)

1. Access SP mode 5-902 and select the number corresponding to the list that you wish to print.
2. Press the (Interrupt) key on the operation panel to access the copy mode display.
3. Select the paper size.
4. Press the (Start) key on the operation panel to print the list.
5. After printing the list, exit copy mode by pressing the (Interrupt) key on the operation panel.
6. Exit SP mode.

4.2.9 MEMORY ALL CLEAR (SP5-801)

NOTE: Memory All Clear mode resets all the settings and counters stored in the NVRAM to the defaults, except for the following:

- Electrical total counter value (SP7-003)
- Machine serial number (SP5-811)
- Plug & Play brand name and production name setting (SP5-907)
- Some SBU settings (SP4-904-3, SP4-904-4, SP4-906, SP4-909)

Normally, this SP mode should not be used. This procedure is necessary only after replacing the NVRAM, or when the copier malfunctions because the NVRAM is damaged.

Using a Flash Memory Card

1. Upload the NVRAM data to a flash memory card (see NVRAM Data Upload).
2. Print out all SMC data lists (SP mode 5-992).
   NOTE: Be sure to print out all the lists. If the NVRAM data upload was not completed, it is necessary to change the SP mode settings by hand.
3. Access SP mode 5-801.
4. Hold the “Photo Mode” key and the “OK” or # key at the same time. (If the operation was successful, the beeper will sound 5 times. If it failed, the beeper will sound only twice.)
5. Turn the main switch off and back on.
6. Download the NVRAM data from a flash memory card (see NVRAM Data Download).

Without Using a Flash Memory Card

If there is no flash memory card, follow the steps below.

1. Print out all SMC Data Lists (SP mode 5-992).
2. Access SP mode 5-801.
3. Hold the “Photo Mode” key and the “OK” or # key at the same time. (If the operation was successful, the beeper will sound 5 times. If it failed, the beeper will sound only twice.)
4. Turn the main switch off and back on.
5. Do the printer and scanner registration and magnification adjustments (see Replacement and Adjustment - Copy Adjustments).
6. Referring to the SMC data lists, re-enter any values that differ from the factory settings. In particular, the values for SP4-904-1, SP4-904-2, SP4-905, and SP4-907 must be re-entered.
7. Do the standard white level adjustment (SP4-908). (See Replacement and Adjustment – Standard White Density Adjustment for details.)
8. Check the copy quality and the paper path, and do any necessary adjustments.

4.2.10 PROGRAM UPLOAD/DOWNLOAD

In this machine, the BICU software is upgraded using a flash memory card.

There are two program download procedures.

- SP5-826: Uploads from the BICU to a flash memory card.
- SP5-827: Downloads from a flash memory card to the BICU.

Program Download (SP5-827)

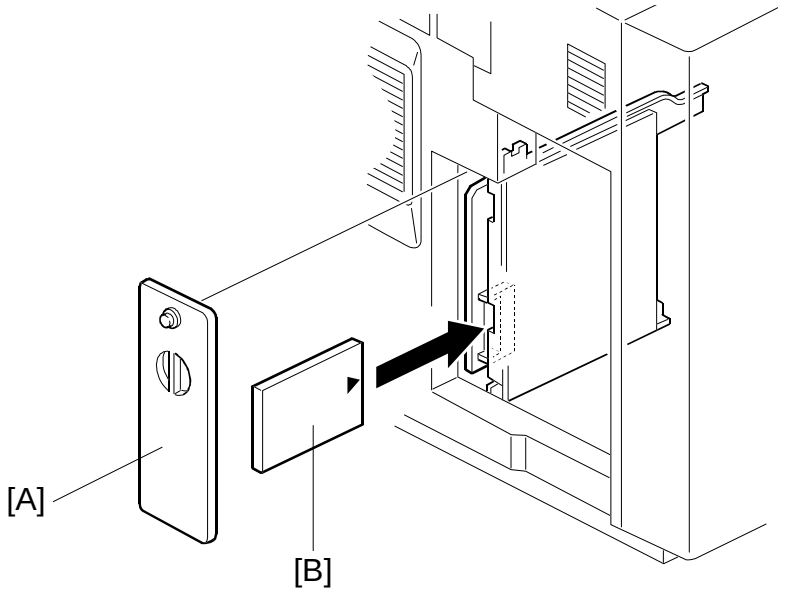

A250M211.WMF

1. Turn off the main switch.
2. Remove the cover [A] (1 rivet).
3. Plug the flash memory card [B] into the card slot.
   NOTE: Make sure that the surface printed “A” faces the left side of the machine (as viewed from the front of the machine).
4. Hold the (Energy Saver) key and turn on the main switch.
5. Access SP mode 5-827.
6. The machine erases the current software, then writes the new software to the BICU. This takes about 60 seconds. If downloading failed, an error message appears, as follows. At this time, repeat the download procedure.

Display during writing

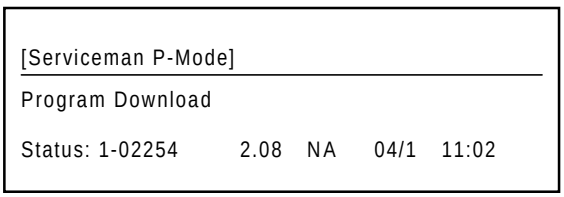

A250M505.WMF

Display when the download is complete

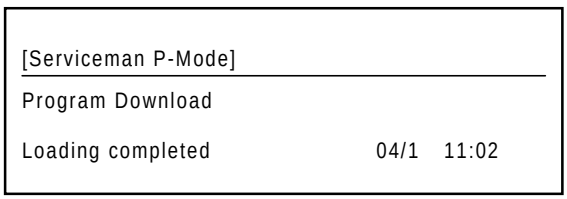

A250M506.WMF

Display if writing failed

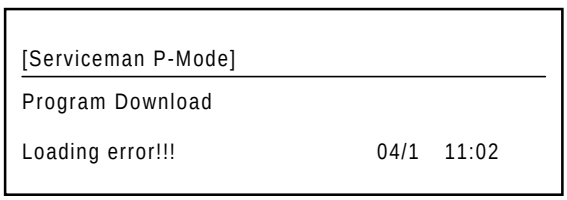

A250M507.WMF

Program Upload (SP5-826)

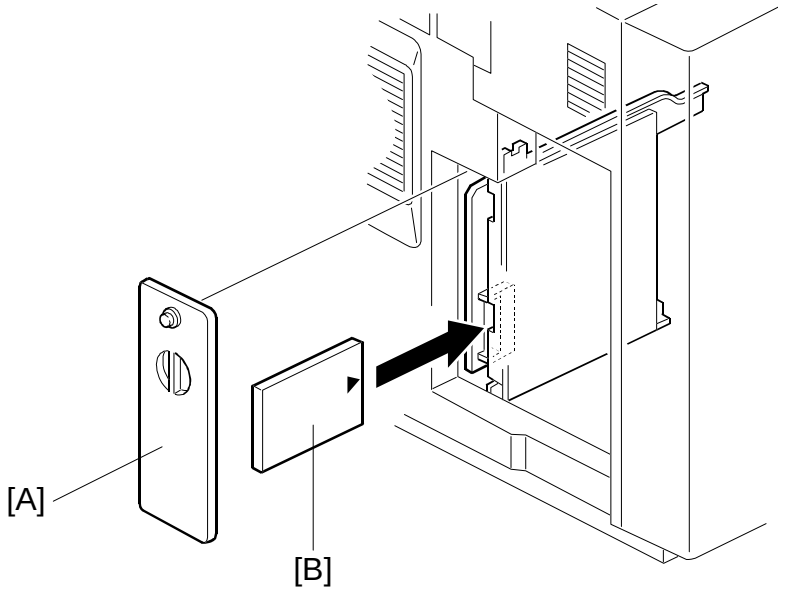

A250M211.WMF

1. Turn off the main switch.
2. Remove the cover [A] (1 rivet).
3. Plug the flash memory card [B] into the card slot.
   NOTE: Make sure that the surface printed “A” faces the left side of the machine (as viewed from the front of the machine).
4. Turn on the main switch.
5. Access SP mode 5-826.
6. The machine erases the current software, then writes the new software to the flash memory card. This takes about 60 seconds. If uploading failed, an error message appears (see “Program Download”). At this time, repeat the upload procedure.

4.2.11 NVRAM DATA DOWNLOAD

After doing the memory all clear procedure, NVRAM data will be reset to their default settings. So it is necessary to upload the NVRAM data before clearing the NVRAM, and to download the NVRAM data afterwards.

- SP5-824: Uploads from the BICU to a flash memory card.
- SP5-825: Downloads from a flash memory card to the BICU.

NVRAM Data Download (SP5-825)

NOTE: This procedure downloads all the settings stored in the NVRAM except for the following items:

- Electrical total counter value (SP7-003)
- Machine serial number (SP5-811, SP5-920, SP5-925)
- Plug & Play brand name and production name setting (SP5-907)
- Some SBU settings (SP4-904-3, SP4-904-4, SP4-906, SP4-909)

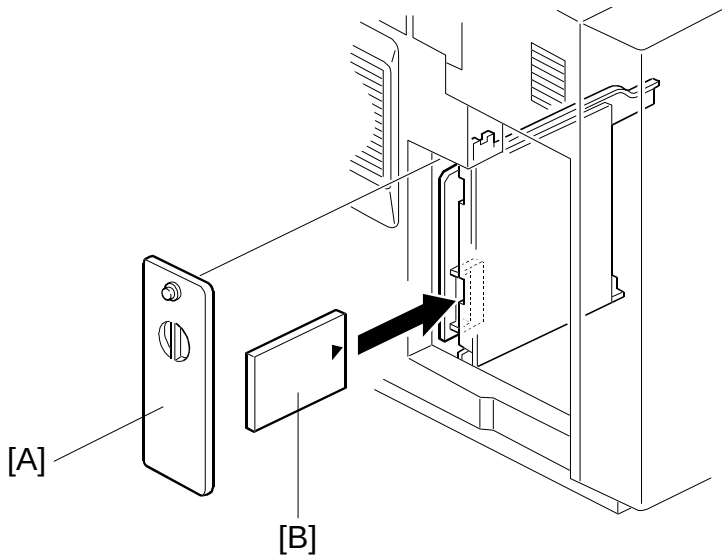

A250M211.WMF

1. Turn off the main switch.
2. Remove the cover [A] (1 rivet).
3. Plug the flash memory card [B] into the card slot.
   NOTE: Make sure that the surface printed “A” faces the left side of the machine (as viewed from the front of the machine).
4. Turn on the main switch.
5. Access the SP mode 5-825.
6. The machine erases the current settings, then writes the new settings onto the NVRAM on the BICU board. If downloading failed, an error message appears (see “Program Download”). At this time, repeat the download procedure.

NVRAM Data Upload (SP5-824)

1. Turn off the main switch.
2. Remove the cover [A] (1 rivet).
3. Plug the flash memory card [B] into the card slot.
   NOTE: Make sure that the surface printed “A” faces the left side of the machine (as viewed from the front of the machine).
4. Turn on the main switch.
5. Access SP mode 5-824.
6. The machine erases the current settings, then writes the machine’s settings to the flash memory card. This takes about 60 seconds. If uploading failed, an error message appears (see “Program Download”). At this time, repeat the upload procedure.

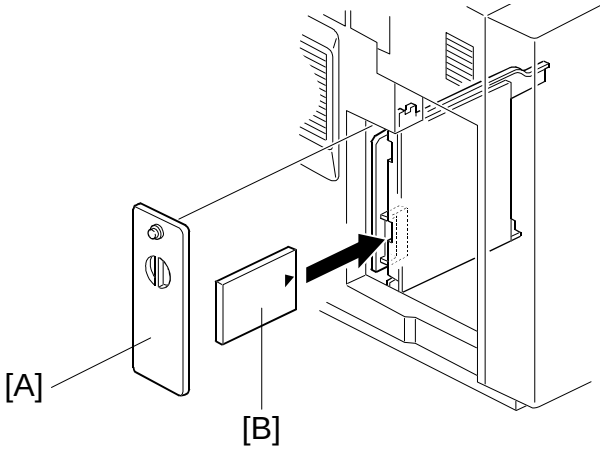

A250M211.WMF

4.2.12 APS AND PLATEN/DF COVER SENSOR OUTPUT DISPLAY (SP4-301)

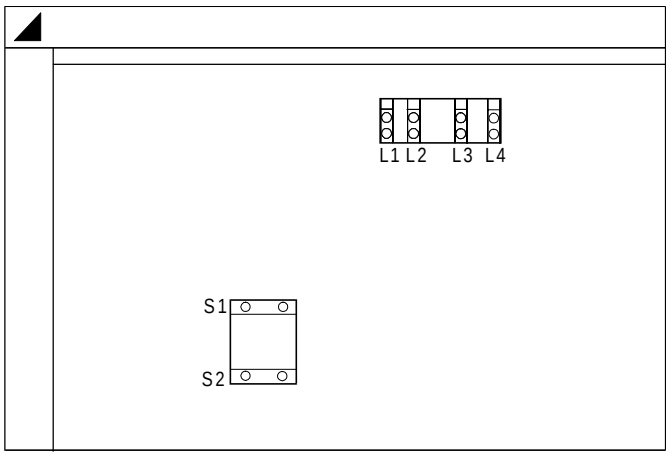

A250M604.WMF

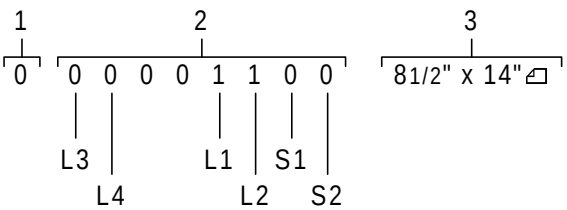

1. Platen cover sensor status 1 = Closed
2. APS sensor status 1 = Paper detected
3. Paper size display

4.2.13 DF APS SENSOR OUTPUT DISPLAY (SP6-901)

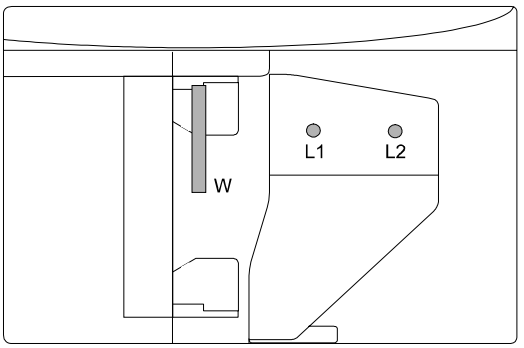

A250M600.WMF

	Large ⟷ Small			
W1	0	0	1	1
W2	0	1	0	1

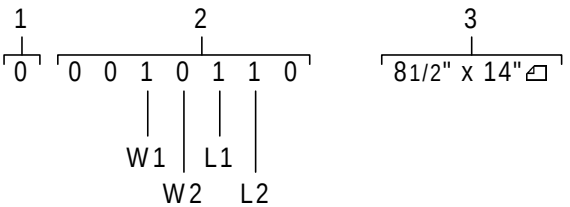

1. Original set sensor status 1 = Paper detected
2. APS sensor status 1 = Paper detected
3. Paper size display

L1	L2	W1	W2	Paper Size	
				inches	mm
0	0	0	0	8 1/2" x 11" Sideways	A4 Sideways
0	0	0	1	-	B5 Sideways
0	0	1	0	8 1/2" x 5 1/2" Sideways	A5 Sideways
0	0	1	1	5 1/2" x 8 1/2" Lengthwise	A5 Lengthwise
1	0	1	0	8 1/2" x 11" Lengthwise	A4 Lengthwise
1	0	1	1	-	B5 Lengthwise
1	1	0	0	11" x 17"	A3
1	1	0	1	10" x 14"	B4
1	1	1	0	8 1/2" x 14"	8 1/2" x 13"

1: Detected

4.2.14 DISPLAY LANGUAGE (SP5-808)

	US/Asia	Europe (standard)	Europe (option 1)	Europe (option 2)	Europe (option 3)
0	NA	UK	UK	UK	UK
1	FR	DE	DE	DE	DE
2	ES	FR	FR	FR	FR
3		IT	IT	IT	IT
4		ES	ES	ES	ES
5		NL	SE	CZ	CX
6			NO	HU	PL
7			DK	PL	PT
8			FI	PT	

NA: English UK: English DE: German
FR: French IT: Italian ES: Spanish
NL: Dutch SE: Swedish NO: Norwegian
DK: Danish FI: Finnish CZ: Czech
HU: Hungarian PL: Polish PT: Portuguese

4.2.15 SERIAL NUMBER INPUT (SP5-811)

Used to input the machines serial number. (Normally done at the factory.) The numeric key pad has 12 buttons. Use the first 11 buttons ① to ⑨, ⑩ and ⓪ to input the serial number (# is not used). Each button stands for one digit of the serial number. The first 4 buttons allow you to scroll through number 0 to 9 and “A” to “Z”. Buttons 5 to 11 only scroll through numbers 0 to 9.

①	②	③
1st digit	2nd digit	3rd digit
④	⑤	⑥
4th digit	5th digit	6th digit
⑦	⑧	⑨
7th digit	8th digit	9th digit
⑩	⓪	#
10th digit	11th digit	(Not use)

4.3 USER TOOLS

The User Tools are accessed by users and key operators, and by sales and service staff. User Tools are used to input or change the copier's default settings.

4.3.1 HOW TO ENTER AND EXIT USER TOOLS

Press the User Tools button, then select the User Tools program. After finishing the User Tools program, press the User Tools button to exit User Tools.

4.3.2 USER TOOLS TABLE

System Setting Table

1. System	1. Function Priority	
	2. Panel Tone	
	3. Copy Count Display	
	4. System Reset	
	5. Function Reset	
	6. Panel Off Timer	
	7. Energy Saver Level	
	8. Energy Saver Timer	
	9. Auto Off Timer	
	10. AOF (Keep It On.)	
	11. Special Pap. Size	Tray 1
		Tray 2
		Tray 3
	12. Pap. Tray Priority	
	13. Auto Tray Switch	
	14. Output Tray Prio.	Copier Paper Tray
		Copier Bypass Tray
		FAX Paper Tray
		FAX Bypass Tray
		Printer Paper Tray
		Printer Bypass Tray
	15. Print Priority	
	16. Display Contrast	
	17. Paper Status	
	18. Key Op. Tools	Show/Print Counter
		Print Counter List
		Key Op. Access
		Prog. Key Op. Code
		Restricted Access

Copy Setting Table

2. Copier	1. General Features	1. APS Priority
		2. ADS Priority
		3. Original Priority
		4. Max. Copy Q'ty
		5. Set Ratio
		6. En. Ratio Priority
		7. Re. Ratio Priority
		8. Image Adjustment
		9. Copy Auto Reset
		10. Initial Mode Set
		11. Original Tone
		12. Reset Bypass Set
		13. Key Op. Tools
	2. ADF/Sorter	1. Comb. Auto Eject
		2. Original Count
		3. SADF Auto Reset
		4. R.Srt.AutPap.cont
		5. Sort

4.4 LEDS

BICU

Number	Function
LED 101	Monitors the +5 V line for the slave CPU. Usually, this LED is blinking.
LED 102	Monitors the +5 V line. Usually, this LED is lit.

IOB

Number	Function
LED 100	Monitors the connection between the IOB and the BICU. Usually, this LED is blinking.

4.5 SPECIAL TOOLS AND LUBRICANTS

4.5.1 SPECIAL TOOLS

Part Number	Description	Q'ty
54209516	Test Chart - OS-A3 (10 pcs/set)	1
A0069104	Scanner Positioning Pin (4 pcs/set)	1
A0299387	Digital Multimeter - FLUKE 87	1
A2309351	Case - Flash Memory Card	1
A2309352	Flash Memory Card - 4MB	1
A2509099	NVRAM - Minus Counter	1

4.5.2 LUBRICANTS

Part Number	Description	Q'ty
A0289300	Grease Barrierta - JFE 5 5/2	1
52039501	Silicone Grease G-501	1

5. PREVENTIVE MAINTENANCE SCHEDULE

5.1 PM TABLE

NOTE: 1) After carrying out PM, clear the maintenance counter (SP7-909).
2) The amount mentioned as the PM interval indicates the number of prints.

Symbol key: C: Clean R: Replace L: Lubricate I: Inspect

	EM	100k	200k	300k	NOTE
OPTICS					
Reflector	C	C	C	C	Optics cloth
1st mirror	C	C	C	C	Optics cloth
2nd mirror	C	C	C	C	Optics cloth
3rd mirror	C	C	C	C	Optics cloth
Scanner guide rails	C	C	C	C	Do not use alcohol.
Platen sheet cover	I	I	I	I	Replace the platen sheet, if necessary. Dry cloth or alcohol
Exposure glass	C	C	C	C	Dry cloth or alcohol
Toner shield glass	C	C	C	C	Dry cloth
APS sensor	C	C	C	C	Dry cloth
PAPER FEED					
Paper feed roller		R	R	R	
Friction pad		R	R	R	
Bottom plate pad		R	R	R	
Registration rollers	C	C	C	C	Clean with water or alcohol.
Relay rollers	C	C	C	C	Dry cloth
Paper feed guides	C	C	C	C	Dry cloth
Paper dust mylar	C	C	C	C	Dry cloth
FUSING UNIT					
Hot roller		R	R	R	
Pressure roller		R	R	R	
Hot roller bushing - front		R	R	R	
Hot roller bushing - rear		R	R	R	
Pressure roller bushing - front		R	R	R	
Pressure roller bushing - rear		R	R	R	
Hot roller strippers		R	R	R	
Upper exit roller		R	R	R	
OTHERS					
Transfer roller		R	R	R	

	EM	100k	200k	300k	NOTE
ADF					
Feed belt	C	R	R	R	Clean with water or alcohol.
Separation roller	C	R	R	R	Clean with water or alcohol.
Pick-up roller	C	R	R	R	Clean with water or alcohol.
Stamp	I				Replace if necessary
White plate	C	C	C	C	Clean with water or alcohol.
DF exposure glass	C	C	C	C	Clean with water or alcohol.
Platen cover	C	C	C	C	Clean with water or alcohol.

The PM interval for the ADF is the number of prints (as for other units), not the number of originals.

	EM	100k	200k	300k	NOTE
PAPER TRAY UNIT					
Paper Feed Rollers	C	R	R	R	Dry or damp cloth
Bottom Plate Pad	C	C	C	C	Dry cloth
Paper Feed Guides	C	C	C	C	Clean with water or alcohol.
Friction Pad	C	R	R	R	Dry or damp cloth

5.2 HOW TO CLEAR THE MAINTENANCE COUNTER

After PM, perform the maintenance counter clear (SP7-909).

1. Access SP mode 7-909.
2. Press down the “Photo mode” key and the “OK” or ⓗ key at the same time to reset the counter. If the reset was successful, the beeper will sound 5 times. If it failed, the beeper will sound only twice.

6. REPLACEMENT AND ADJUSTMENT

6.1 EXTERIOR REMOVAL

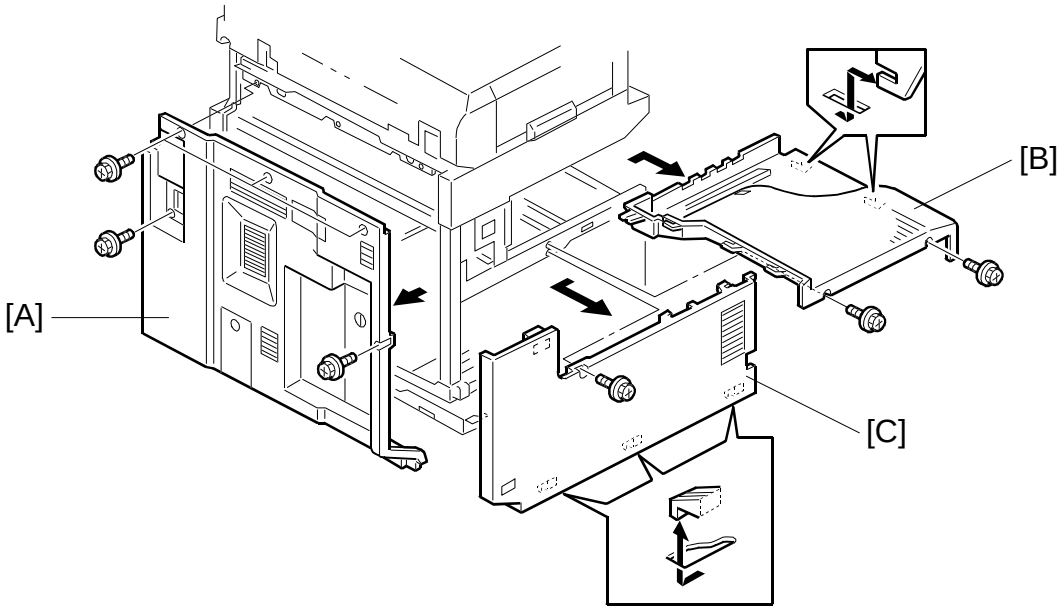

A250R112.WMF

6.1.1 REAR COVER

1. Remove the rear cover [A] (5 screws)

6.1.2 COPY TRAY

1. Remove the copy tray [B], as shown (2 screws).

NOTE: If a 1-bin sorter is installed, remove it before removing the copy tray.

6.1.3 LEFT COVER

1. Remove the left cover [C], as shown (1 screw).

6.1.4 FRONT COVER

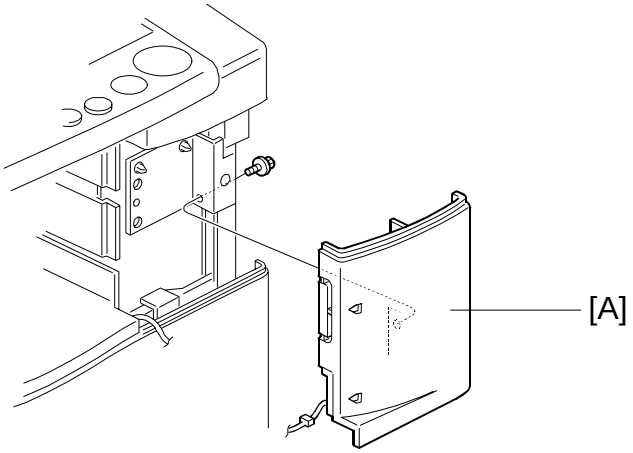

A250R105.WMF

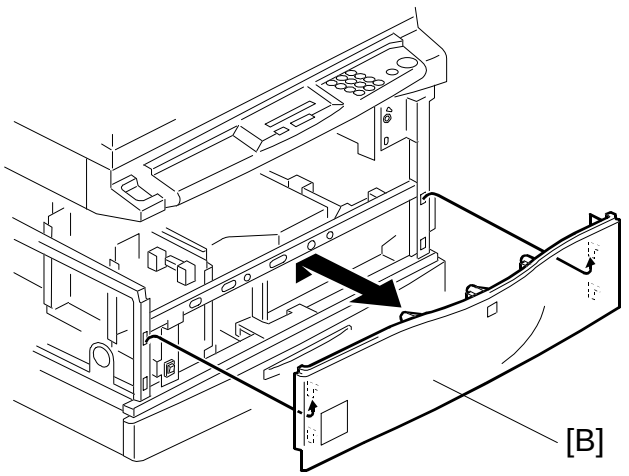

A250R907.WMF

1. Remove the copy tray. (Refer to Copy Tray Removal, section 6.1.2.)
2. Remove the small front cover [A] (1 screw).
3. Remove the front cover [B], as shown.

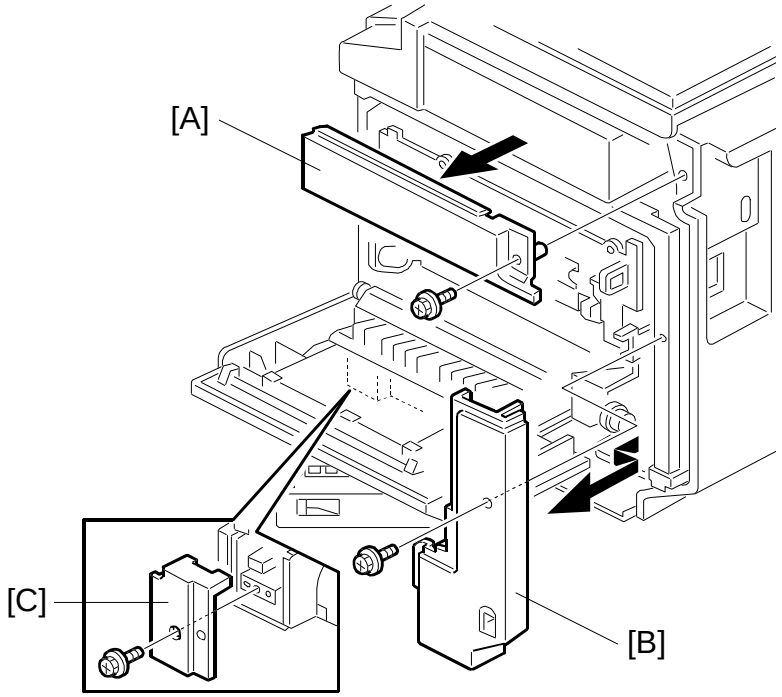

A250R908.WMF

6.1.5 UPPER RIGHT COVER

1. Remove the upper right cover [A] (1 screw).

6.1.6 LOWER RIGHT COVER

1. Remove the upper right cover.
2. Remove the lower right cover [B] (1 screw).

6.1.7 RIGHT SMALL COVER

1. Remove the right small cover [C] (1 screw).

6.1.8 OPERATION PANEL

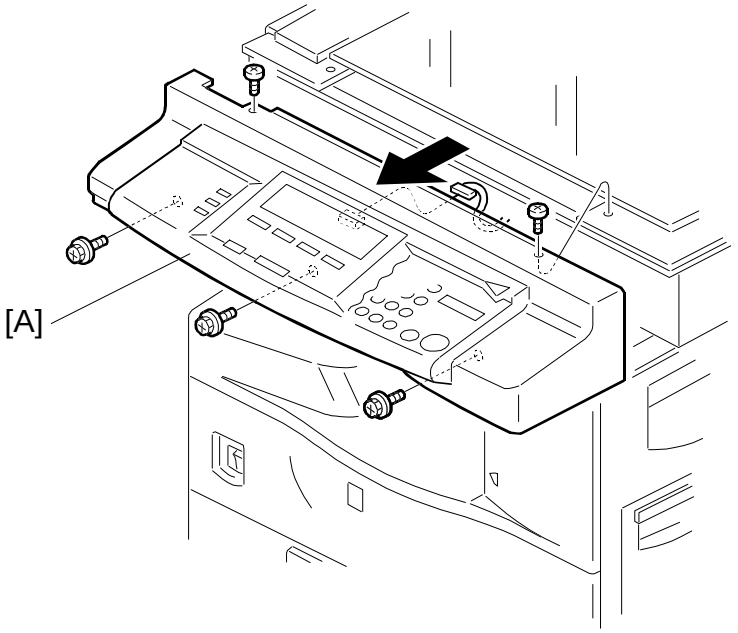

A250R123.WMF

1. Remove the operation panel [A] (5 screws and 1 connector).

6.2 SCANNER

6.2.1 EXPOSURE GLASS REMOVAL

Platen Cover Model

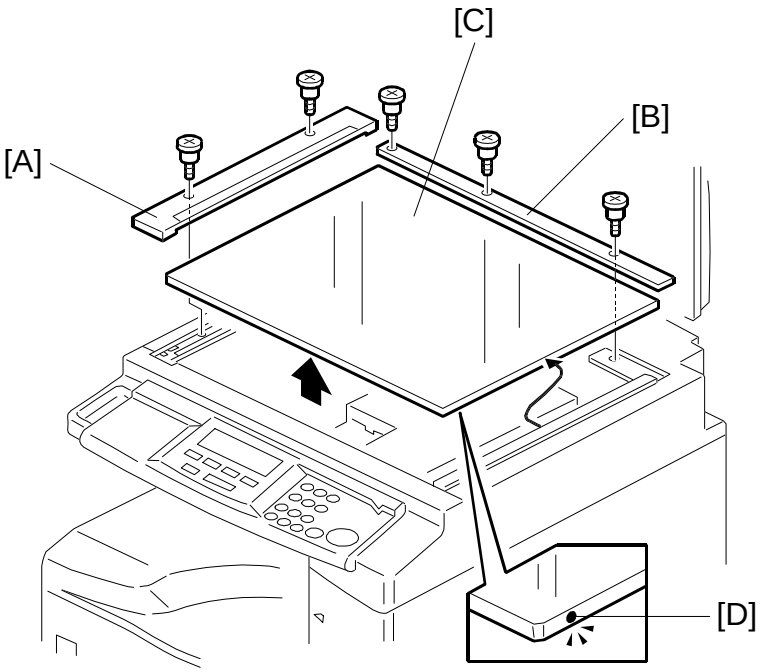

A250R009.WMF

1. Remove the left scale [A] (2 screws).
2. Remove the rear scale [B] (3 screws).
3. Remove the exposure glass [C].
   NOTE: When re-installing the exposure glass, place it so that the mark [D] is in the right front position.

ADF Model

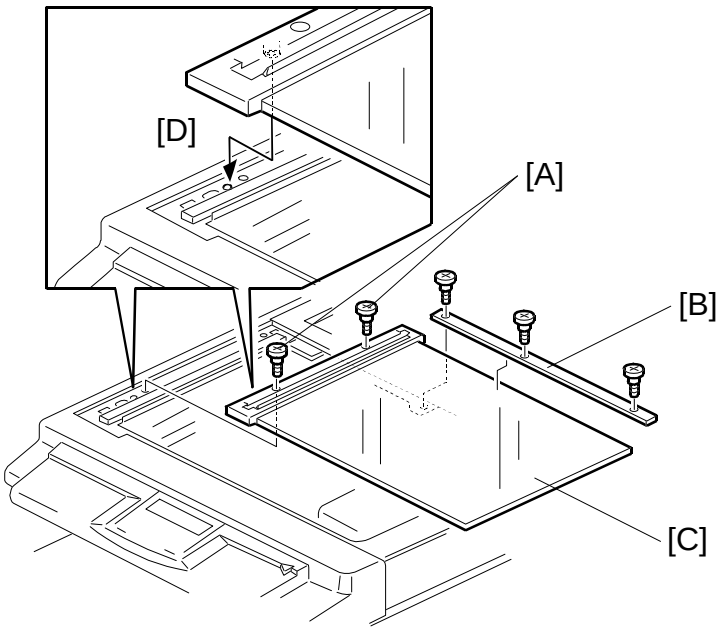

A250R010.WMF

1. Remove the upper right cover. (See Upper Right Cover Removal, section 6.1.5.)
2. Remove the two screws [A].
3. Remove the rear scale [B] (3 screws).
4. Remove the exposure glass [C] with left scale.
   NOTE: When re-installing the exposure glass, make sure that the left scale is inserted into the two pegs [D] on the edge holder.

6.2.2 LENS BLOCK REMOVAL

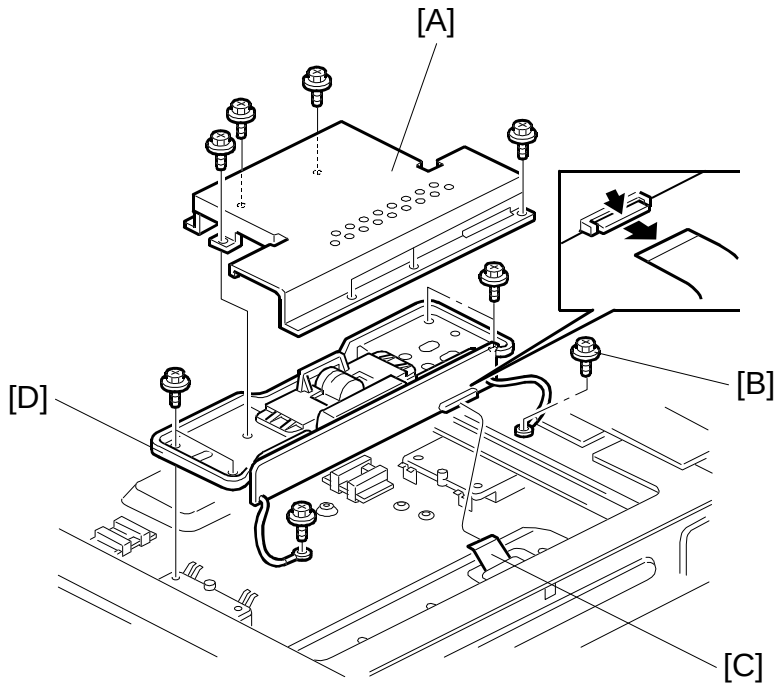

A250R005.WMF

1. Remove the exposure glass.
2. Remove the lens cover [A] (6 screws).
3. Remove the screw [B] securing the grounding wire, and disconnect the flat cable [C].
4. Remove the lens block [D] (4 screws).

6.2.3 EXPOSURE LAMP REPLACEMENT

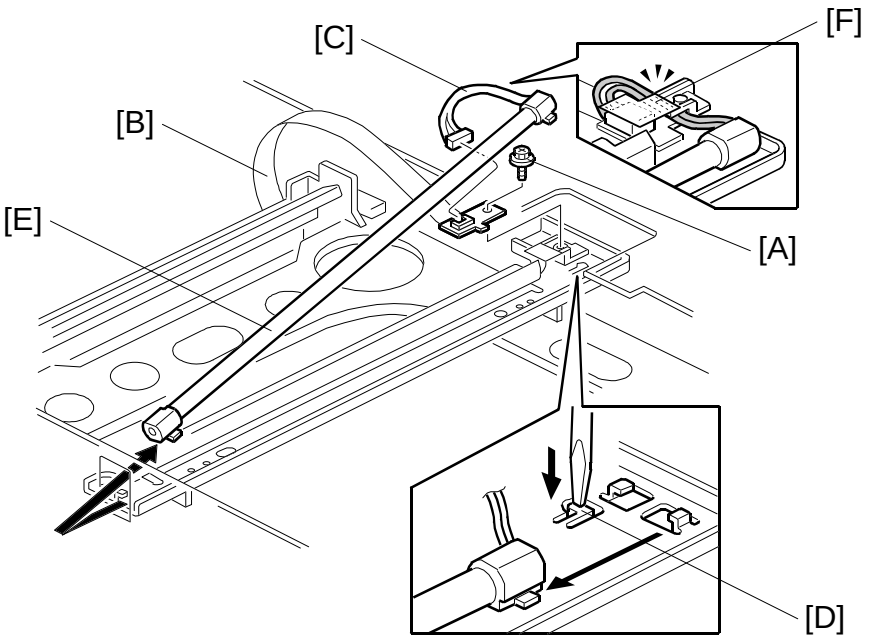

A250R001.WMF

1. Remove the exposure glass.
2. Remove the platen cover (2 screws) and remove the upper rear cover (2 screws).
3. Remove the operation panel (5 screws and 1 connector).
4. Move the 1st scanner to the opening in the center of the frame.
5. Remove the screw [A] securing the flat cable [B] and disconnect the connector [C].
6. Press the hook [D] down to release it. Then slide the exposure lamp [E] in the direction of the arrow to remove it.

NOTE: When installing the exposure lamp, route the cable under the mylar [F] as shown.

6.2.4 1ST SCANNER ALIGNMENT ADJUSTMENT

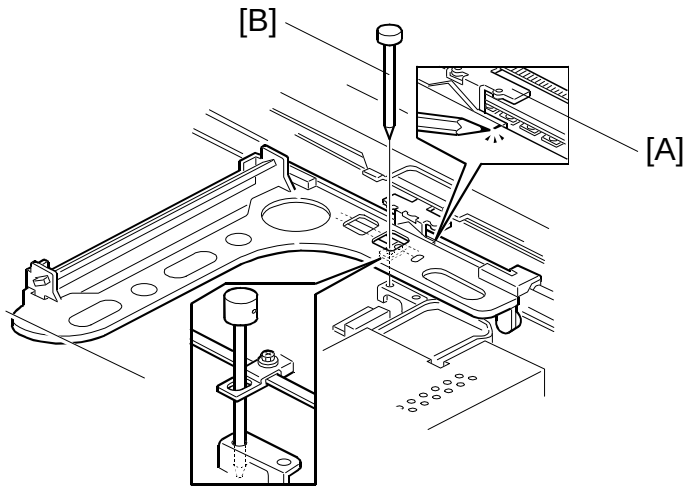

A250R008.WMF

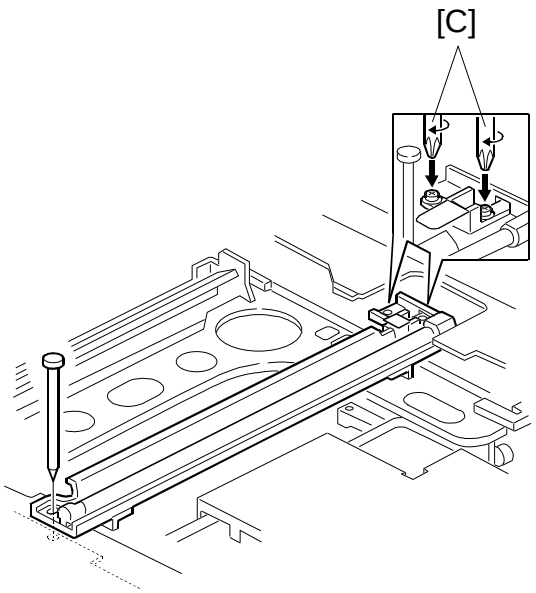

A250R007.WMF

1. Remove the exposure glass.
2. Remove the platen cover (2 screws) and remove the upper rear cover (2 screws).
3. Remove the operation panel (5 screws and 1 connector).
4. Move the 1st scanner to the opening in the center of the frame.
5. Remove the screw securing the flat cable of the exposure lamp, and disconnect the exposure lamp connector.
6. Remove the 1st scanner (2 screws).
7. Position the 1st scanner bracket [A] so that the positioning tool [B] can fit smoothly into the holes as shown. Mark the position of the 1st scanner bracket and remove the tool.
8. While keeping the 1st scanner bracket in the same position, set the 1st scanner on the 1st scanner bracket and adjust the 1st scanner alignment so that the positioning tool fits smoothly into the front hole.
9. Secure the two screws [C] to fix the 1st scanner position.

6.2.5 2ND SCANNER POSITION ADJUSTMENT

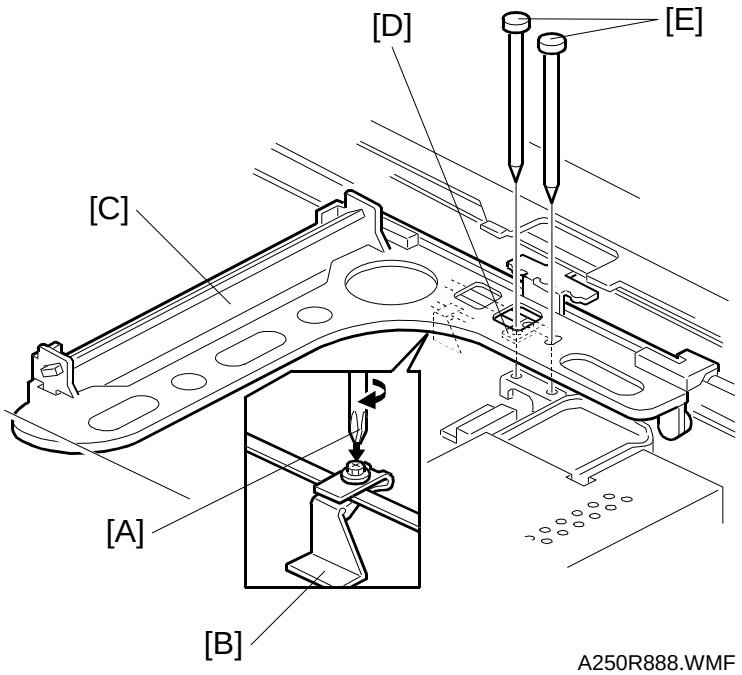

1. Remove the exposure glass.
2. Remove the platen cover (2 screws) and remove the upper rear cover (2 screws).
3. Remove the operation panel (5 screws and 1 connector).
4. Move the 1st scanner to the opening in the center of the frame.
5. Remove the screw securing the flat cable of the exposure lamp, and disconnect the exposure lamp connector.
6. Remove the 1st scanner (2 screws).
7. Loosen the screw [A] securing the belt to the bracket [B].
8. Position the 2nd scanner [C] and the 1st scanner bracket [D] so that the tools [E] can be smoothly set as shown.
9. Tighten the screw [A].

6.3 LASER UNIT

⚠WARNING

Turn off the main power switch and unplug the machine before attempting any of the procedures in this section. Laser beams can seriously damage your eyes.

6.3.1 CAUTION DECAL LOCATIONS

Caution decals are located in the laser section as shown below.

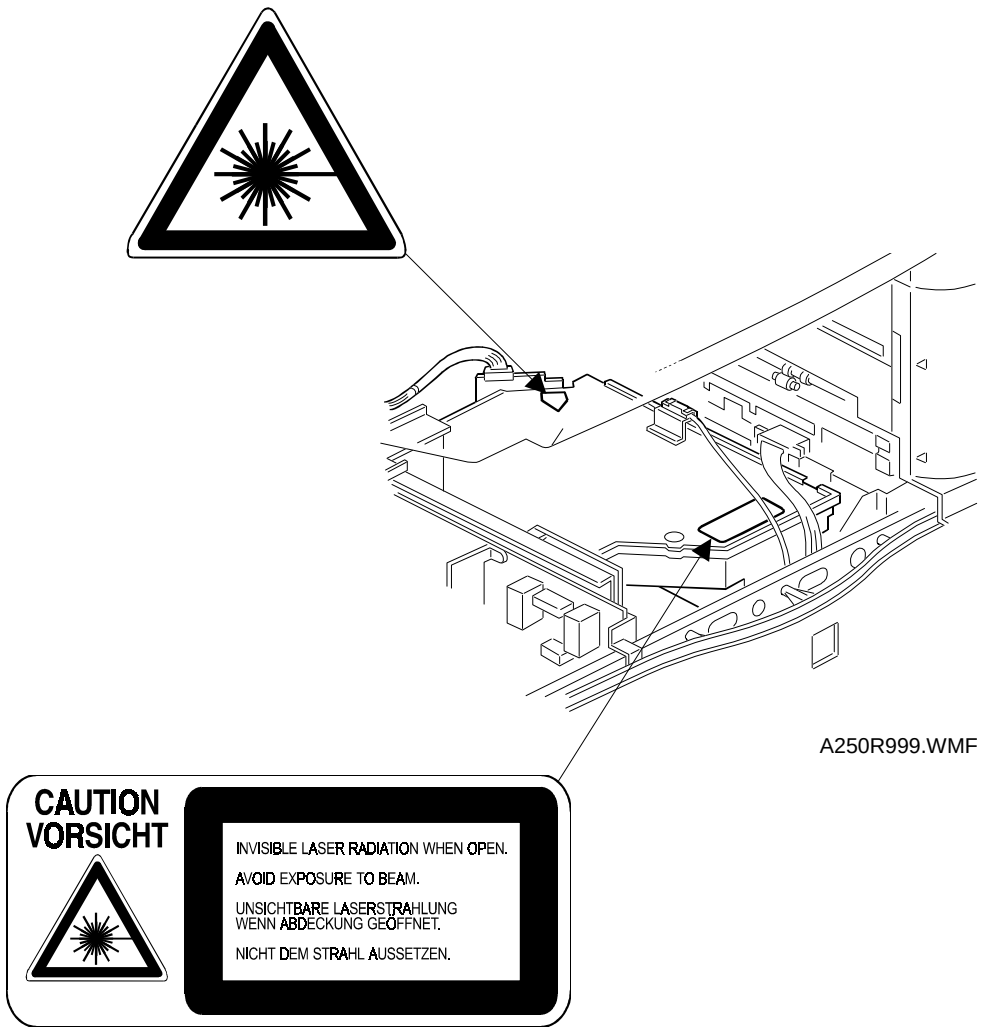

A250R999.WMF

6.3.2 LASER UNIT/TONER SHIELD GLASS REMOVAL

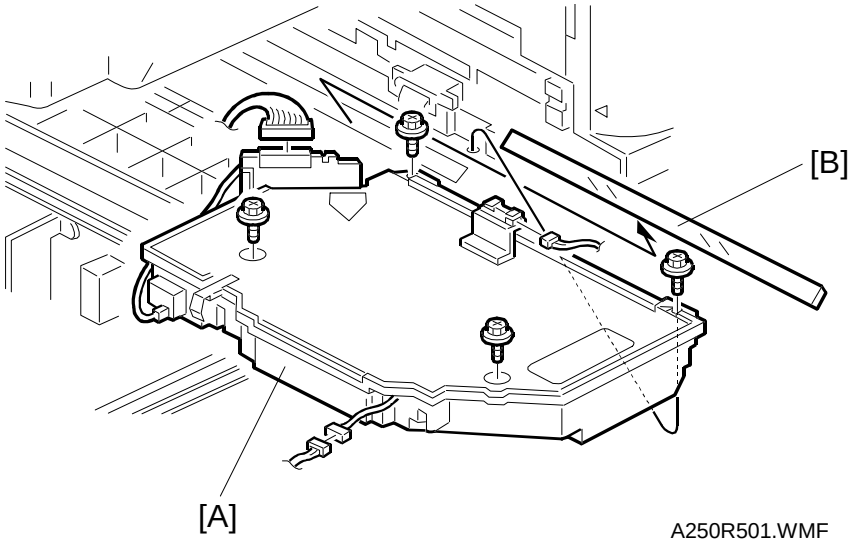

1. Remove the AIO.
2. Remove the paper exit tray (2 screws).
3. Remove the laser unit [A] (4 screws and 3 connectors).
4. After removing the laser unit, remove the toner shield glass [B].

NOTE: When reinstalling the laser unit, be careful not to damage the actuator of the shutter.

6.3.3 LD UNIT/LASER SYNCHRONIZATION DETECTOR REMOVAL

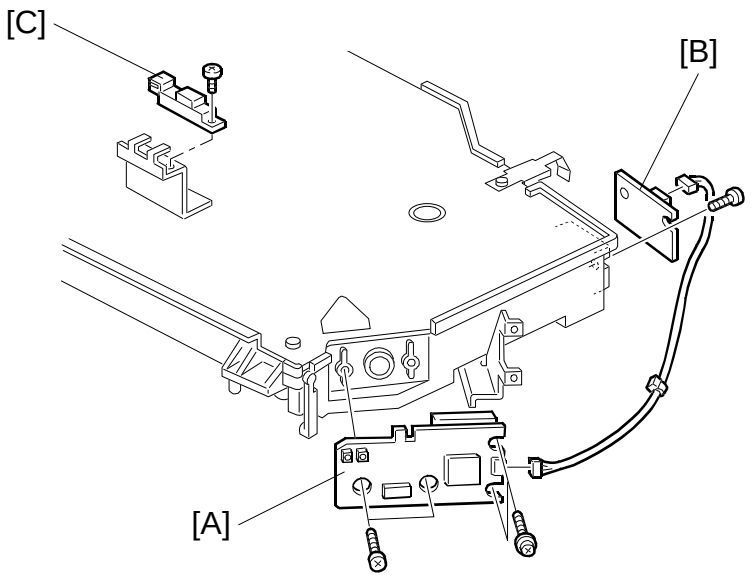

A250R502.WMF

1. Remove the paper exit tray (2 screws).
2. Remove the laser unit.
3. Remove the LD unit [A] (4 screws and 1 connector).
4. Remove the laser synchronization detector [B] (2 screws and 1 connector).

6.3.4 EXIT TRAY PAPER SENSOR REMOVAL

1. Remove the paper exit tray (2 screws).
2. Remove the exit tray paper sensor [C] (1 screw and 1 connector).

6.3.5 POLYGONAL MIRROR MOTOR REMOVAL

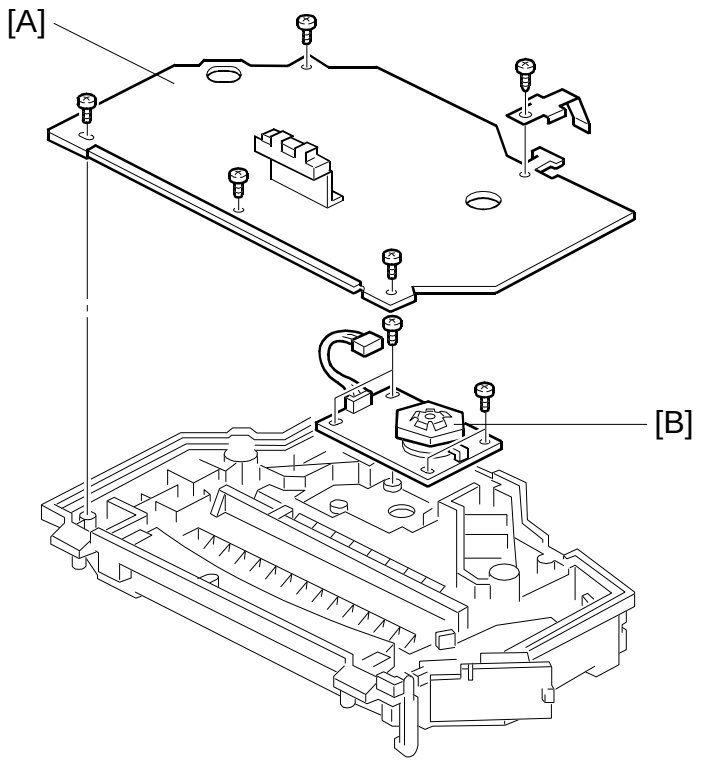

A250R503.WMF

1. Remove the paper exit tray (2 screws).
2. Remove the laser unit cover [A] (5 screws).
3. Remove the polygonal mirror motor [B] (4 screws and 1 connector).

6.3.6 LASER UNIT ALIGNMENT ADJUSTMENT

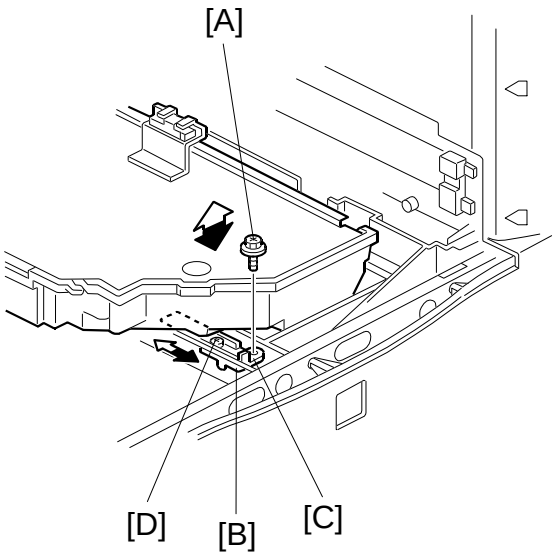

A250R889.WMF

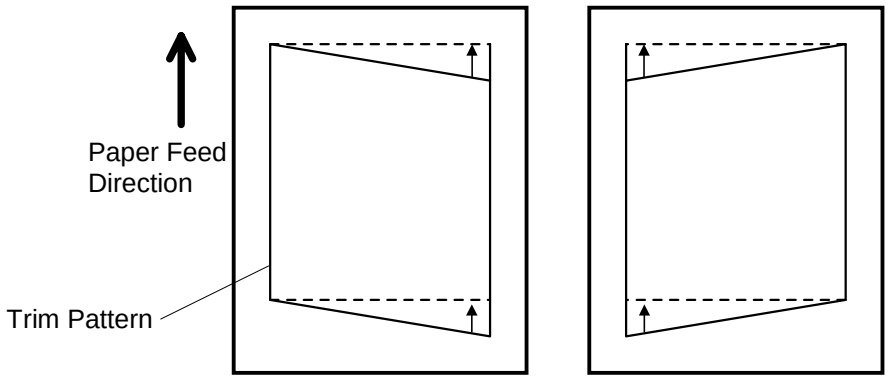

Moving the lever to the front changes the trim pattern as shown above

Moving the lever to the rear changes the trim pattern as shown above

A250R890.WMF

1. Output the trim pattern using SP5-902 (pattern 10).
2. Remove the paper exit tray.
3. Loosen the 4 screws securing the laser unit.
4. Remove the screw [A] securing the adjustment lever [B] from the factory installation position [C]. Then reinstall the screw at the adjustment position [D].
5. Adjust the position of the lever [B] so that a square trim pattern is output with SP5-902.
6. Tighten the screw [A].
7. Tighten other 3 screws.

6.4 IMAGE TRANSFER

6.4.1 TRANSFER ROLLER REMOVAL

Preparation

1) Turn off the main switch.
2) Open the right side cover.

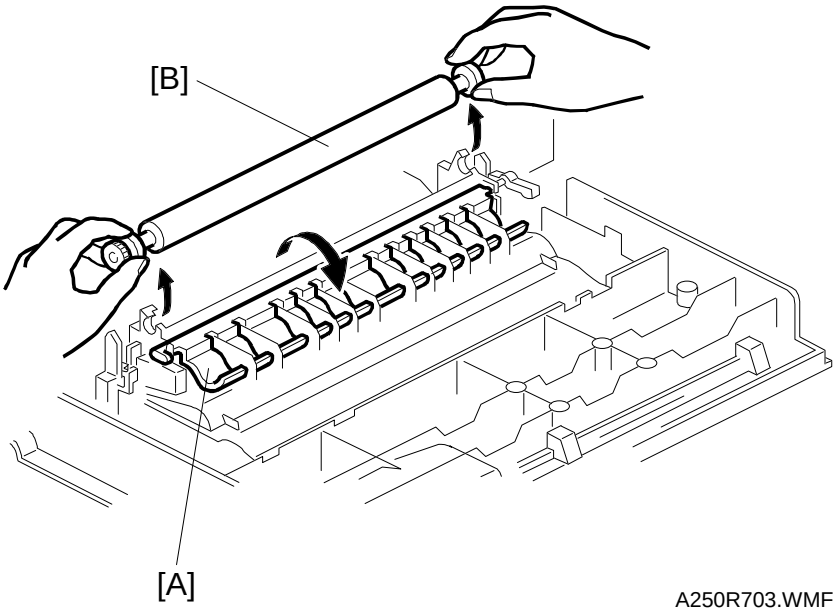

A250R703.WMF

1. Open the transfer roller cover [A].
2. Remove the transfer roller [B].

NOTE: Do not touch the transfer roller surface with bare hands.

6.5 FUSING

6.5.1 FUSING UNIT REMOVAL

Preparation

1) Turn off the main switch.
2) Open the right side cover.

⚠CAUTION

Be careful when removing the fusing unit, because it could be very hot.

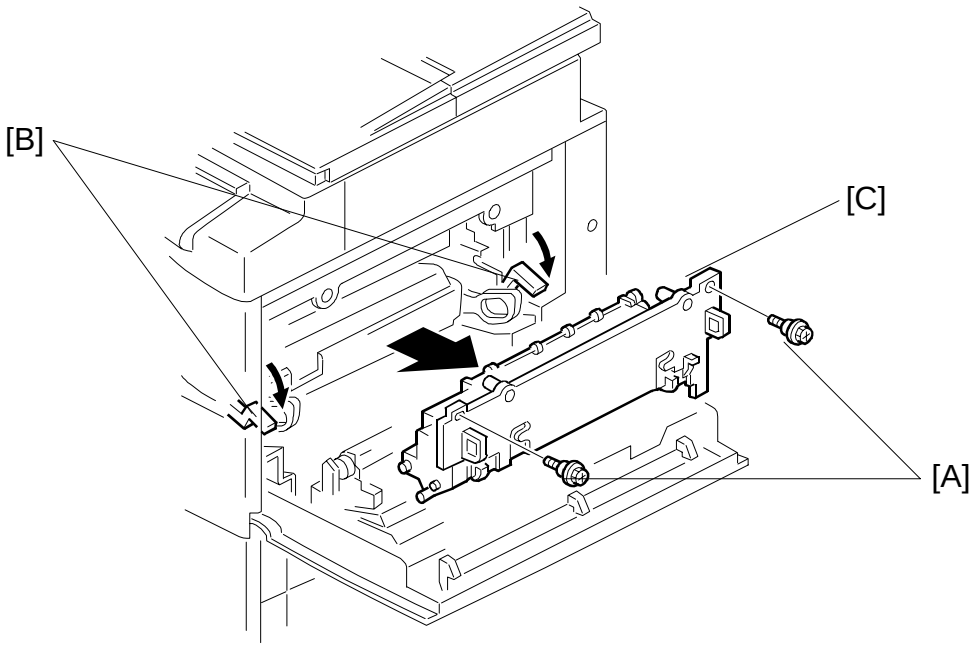

A250R117.WMF

1. Remove the two screws [A].
2. Release the levers as shown [B].
3. Remove the fusing unit [C].

6.5.2 HOT ROLLER, FUSING LAMP AND THERMOFUSE REPLACEMENT

Preparation

1) Remove the fusing unit. (Refer to Fusing Unit Replacement, section 6.5.1.)

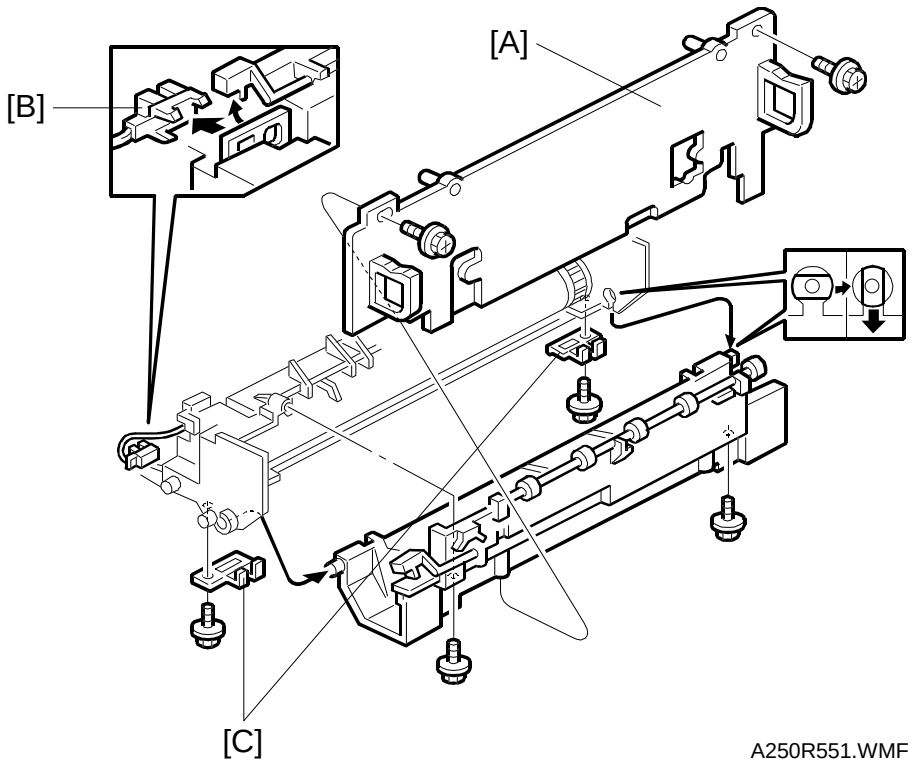

1. Remove the fusing cover [A] (2 screws).
2. Remove the fusing exit sensor [B].
3. Remove the two brackets [C] (2 screws).
4. Separate the fusing unit (2 screws).

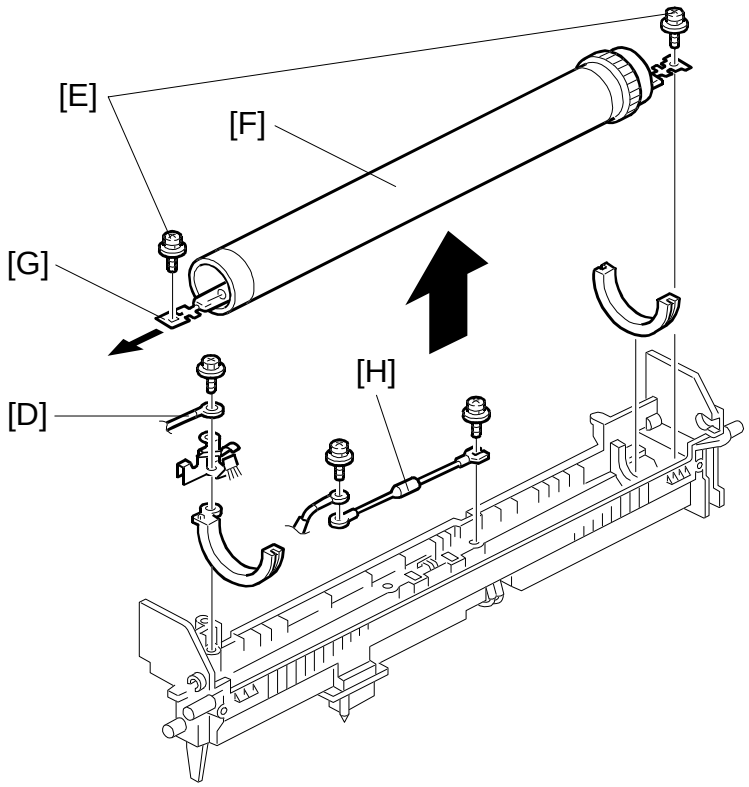

A250R553.WMF

5. Disconnect the hot roller stripper pawl springs (see Hot Roller Stripper Pawl Removal, section 6.5.5.)
6. Remove the hot roller grounding terminal [D] (1 screw).
7. Remove the two screws securing the fusing lamp terminals [E].
8. Replace the hot roller [F].
9. Replace the fusing lamp [G].
10. Replace the thermofuse [H] (2 screws).

NOTE: 1) Do not touch the hot roller with your bare hands.
2) Do not touch the fusing lamp with your bare hands.

6.5.3 PRESSURE ROLLER REPLACEMENT

Preparation

1) Remove the fusing unit and separate the fusing unit. (Refer to Hot Roller, Fusing Lamp and Thermofuse Replacement, section 6.5.2.)

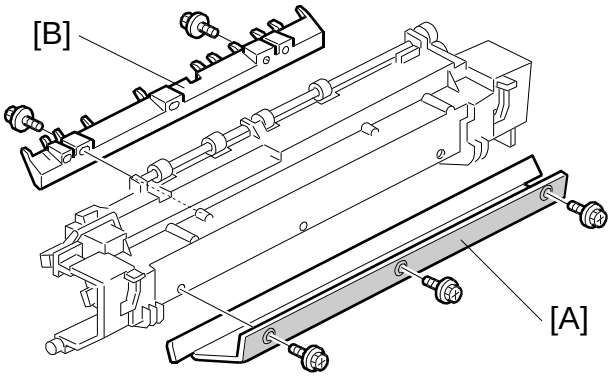

A250R505.WMF

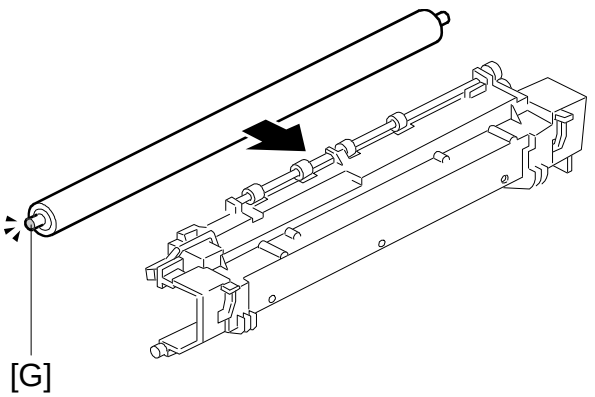

A250R506.WMF

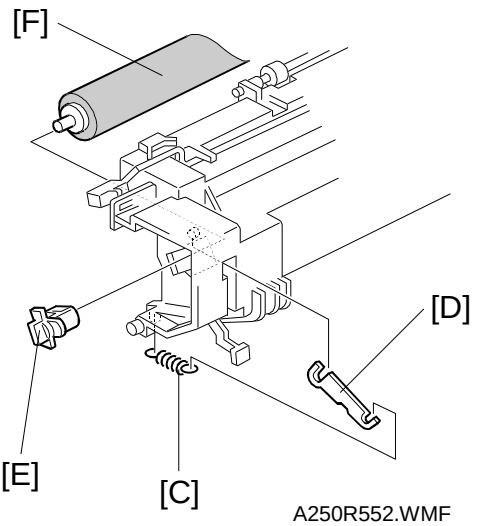

A250R552.WMF

1. Remove the paper entrance guide [A].
2. Remove the paper exit guide [B].
3. Remove the two pressure springs [C].
4. Remove the pressure arms [D]
5. Remove the two bushings [E].
6. Replace the pressure roller [F].

NOTE: 1) When reinstalling the pressure roller, make sure that the green pin [G] is on the left side, as shown (near the fusing exit sensor).
2) Do not touch the pressure roller with your bare hands.

6.5.4 FUSING THERMISTOR REPLACEMENT

Preparation

1) Remove the hot roller. (Refer to Hot Roller and Fusing Lamp and Thermofuse Replacement, section 6.5.2.)

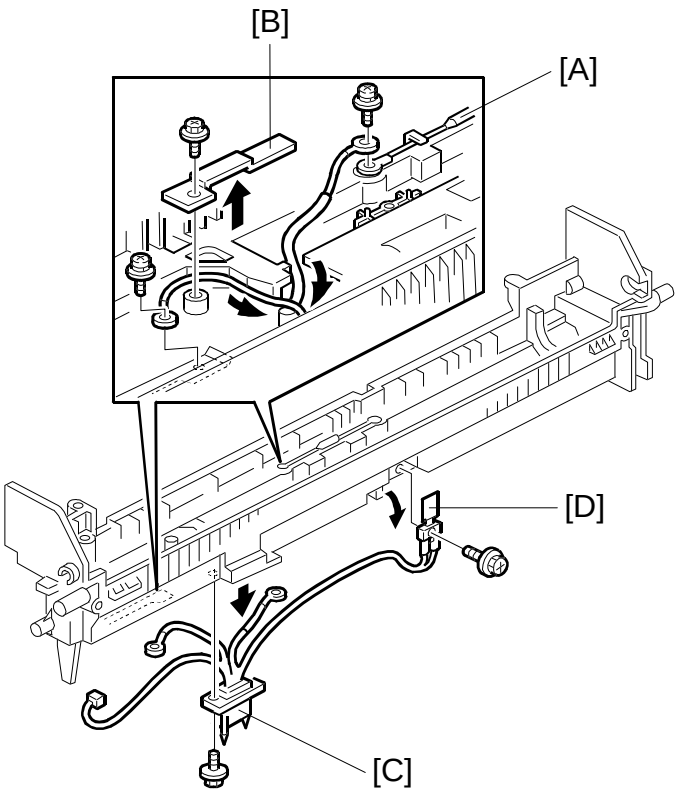

A250R504.WMF

1. Remove the thermofuse [A].
2. Remove the cable cover (1 screw) [B].
   NOTE: When reinstalling the cable cover, secure the cable under the cover correctly.
3. Replace the drawer connector (1 screw) [C] and fusing thermistor (1 screw) [D].

6.5.5 HOT ROLLER STRIPPER PAWL REPLACEMENT

Preparation

1) Remove the fusing unit and separate the fusing unit. (Refer to Hot Roller, Fusing Lamp and Thermofuse Replacement, section 6.5.2.)

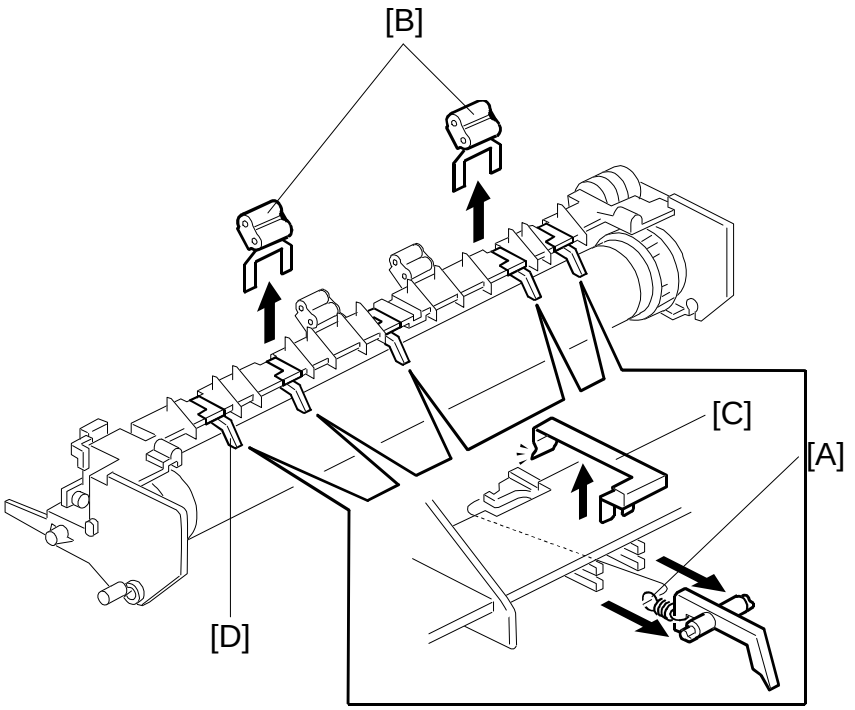

A250R507.WMF

1. Disconnect the hot roller stripper pawl springs [A] (5 springs).
2. Remove the two outer exit rollers [B].
3. Remove the hot roller stripper pawl stoppers (5 stoppers) [C].
4. Replace the five hot roller stripper pawls [D].

6.6 PAPER FEED

6.6.1 PAPER FEED ROLLER REPLACEMENT

Preparation

1) Remove the fusing unit. (Refer to Fusing Unit Replacement, section 6.5.1.)
2) Remove the AIO.

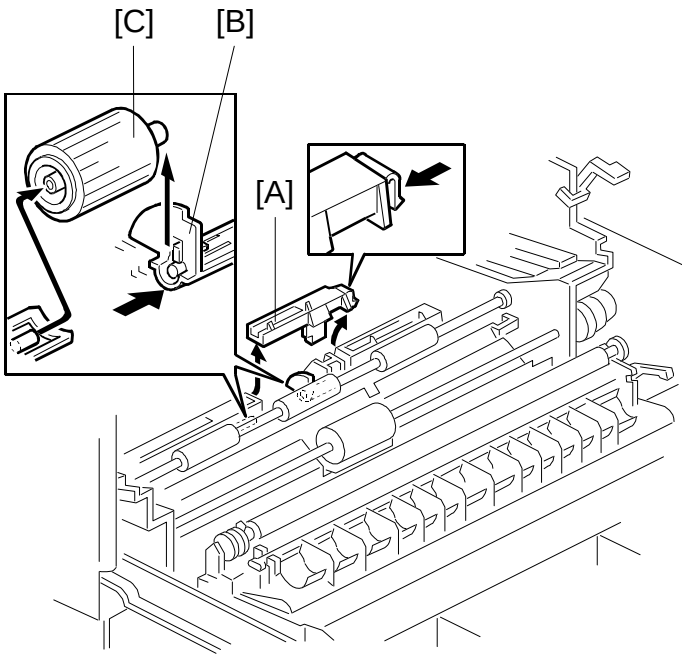

A250R706.WMF

1. Draw out the first paper cassette.
2. Remove the center paper feed roller guide [A].
3. While releasing the spring mechanism [B], remove the paper feed roller [C].

NOTE: Do not touch the paper feed roller with your bare hands.

6.6.2 FRICTION PAD REPLACEMENT

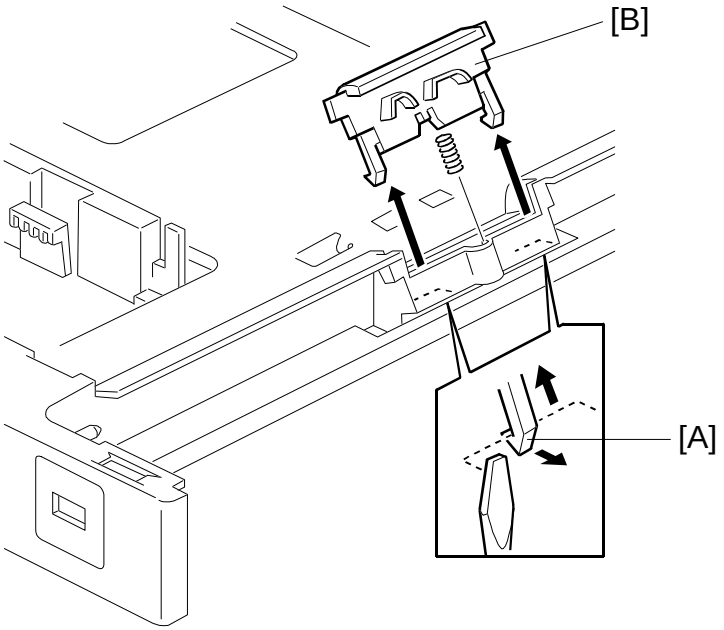

A250R701.WMF

1. Draw out the paper cassette.
2. While unhooking the hooks [A], remove the friction pad [B], as shown.
   NOTE: Be sure to unhook the hooks or they may break.

6.6.3 STANDARD TRAY PAPER FEED CLUTCH REPLACEMENT

Preparation

1) Remove the rear cover. (Refer to Rear Cover Removal, section 6.1.1.)
2) Remove the main motor and gear box. (Refer to Main Motor/Gear Box Replacement, section 6.7.1.)
3) Remove the AIO.

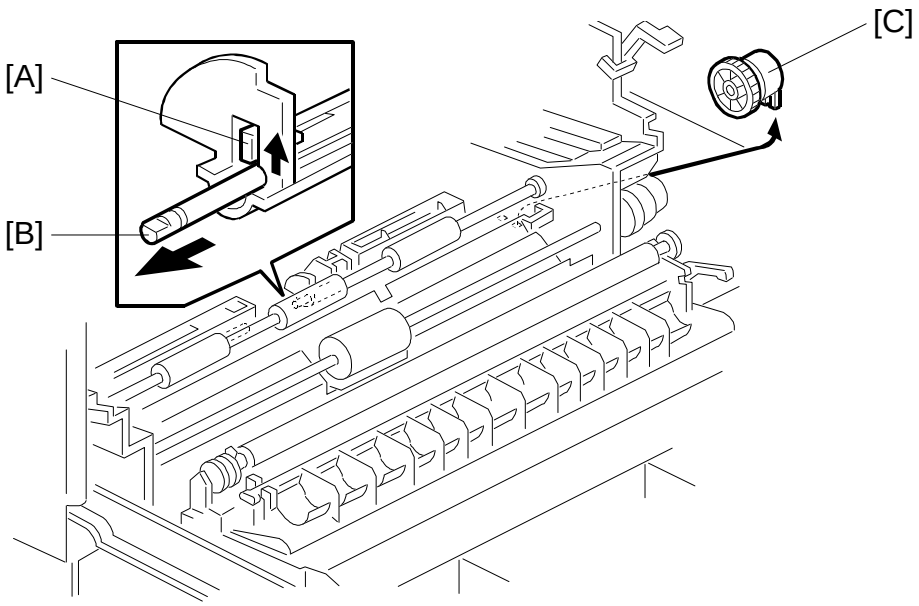

A250R707.WMF

1. Remove the paper feed roller. (Refer to Paper Feed Roller Replacement, section 6.6.1.)
2. While unhooking the hook [A], pull the shaft [B] out to the left.
3. Replace the tray paper feed clutch [C] (1 connector on the engine control board).
   NOTE: Do not remove the bushing for the paper feed roller shaft at the rear, because it may not be possible to reinstall it.

6.6.4 VERTICAL TRANSPORT ROLLER/SENSOR/CLUTCH REPLACEMENT

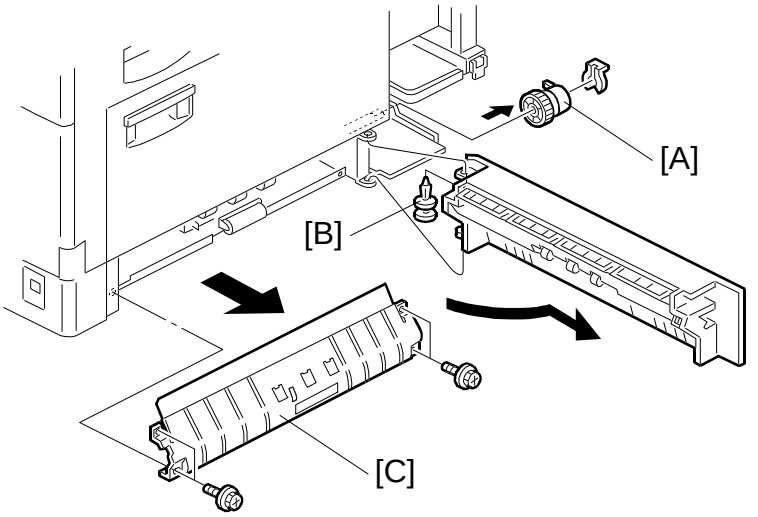

A250R708.WMF

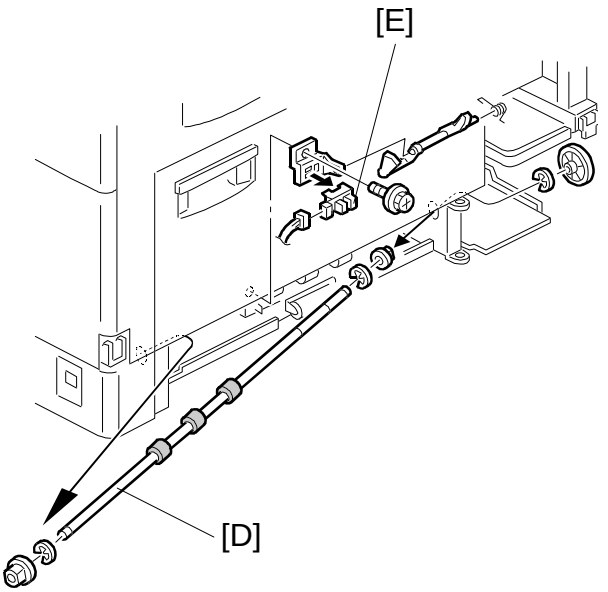

A250R709.WMF

1. Remove the rear right cover.
2. Replace the vertical transport clutch [A] (1 snap ring).
3. Open the vertical transport cover and remove the pin [B].
4. Remove the vertical transport guide [C] (2 screws).
5. Remove the vertical transport roller [D] (3 E-rings, 2 bushings)
6. Remove the vertical transport sensor with bracket (1 screw).
7. Replace the vertical transport sensor [E].

6.6.5 BY-PASS FEED ROLLER REPLACEMENT

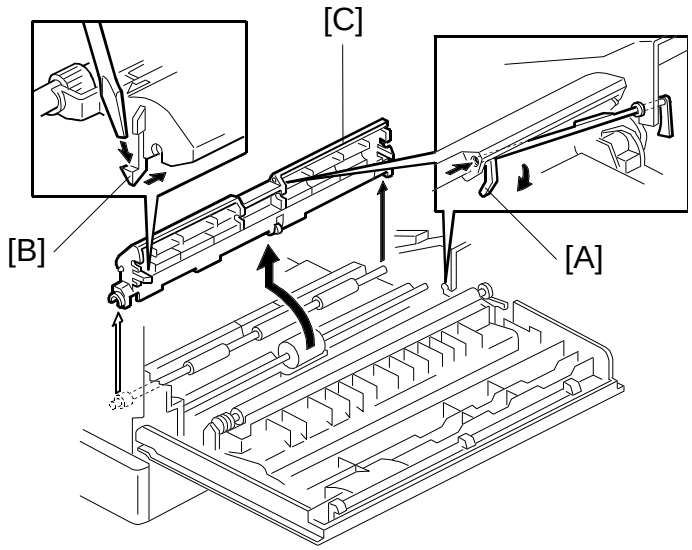

A250R705.WMF

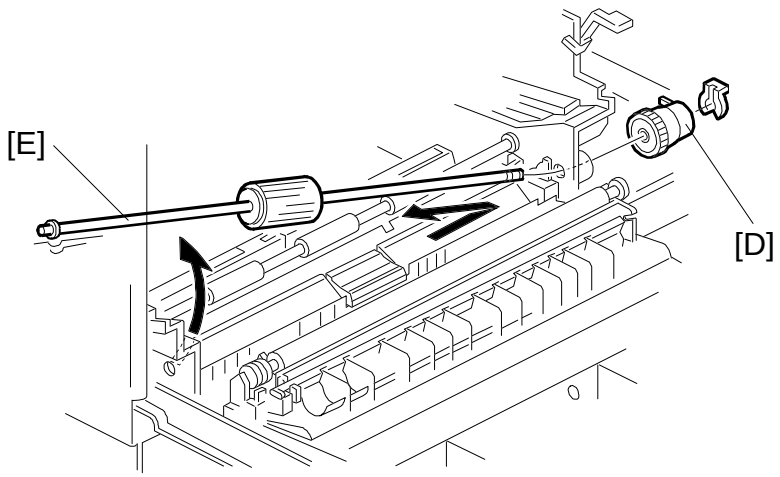

A250R704.WMF

1. Remove the rear right cover.
2. Remove the AIO cartridge and the fusing unit.
3. Release the by-pass feed sensor feeler [A] by pushing the left side of the feeler shaft, as shown.
4. While releasing the hook [B] at each side, remove the by-pass feed roller cover [C], as shown.
   NOTE: Remove the by-pass feed roller cover carefully (it is attached tightly). Otherwise, the feeler [A] may be damaged.
5. Remove the by-pass feed clutch [D] (1 snap ring).
6. Remove the by-pass feed roller [E], as shown.
   NOTE: Do not touch the by-pass feed roller with your bare hands.

6.6.6 BY-PASS FEED FRICTION PAD REPLACEMENT

Preparation

1) Remove the by-pass feed roller. (Refer to By-pass Feed Roller Removal, section 6.6.5.)

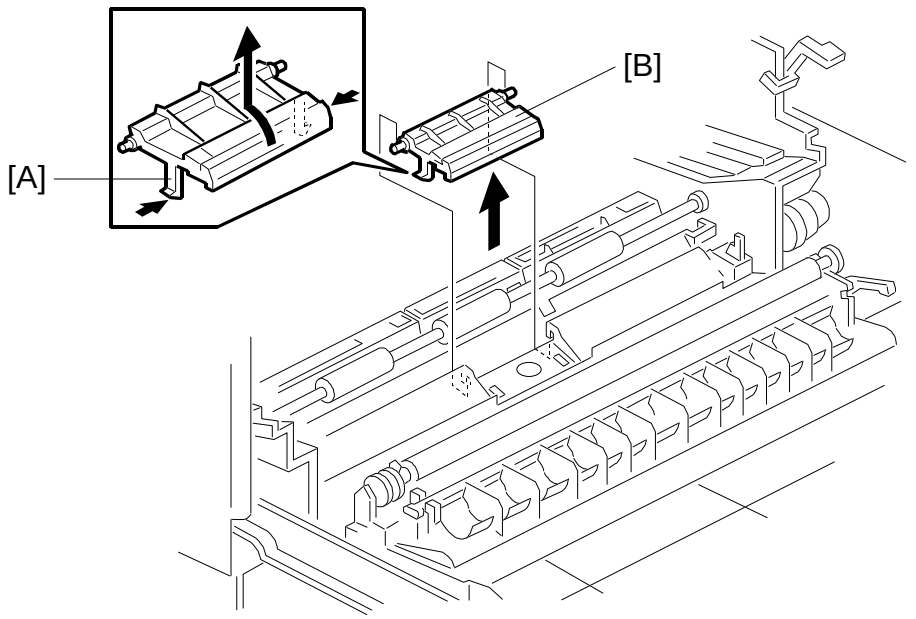

A250R714.WMF

1. While unhooking the hooks [A], remove the friction pad [B], as shown.

NOTE: Be sure to unhook the hooks or they may break.

6.6.7 BY-PASS FEED SENSOR REPLACEMENT

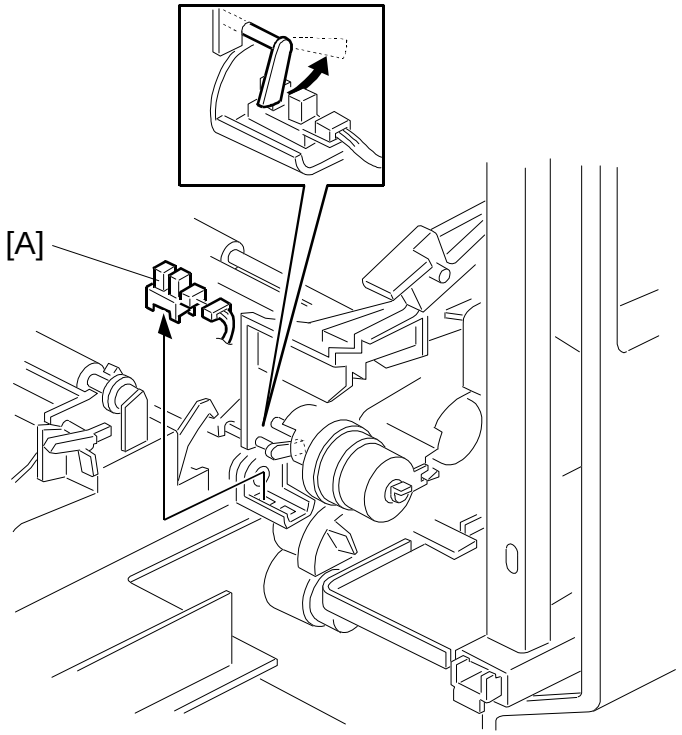

A250R711.WMF

1. Remove the rear right cover.
2. Replace the by-pass feed sensor [A], as shown.

6.6.8 BY-PASS TRAY REMOVAL

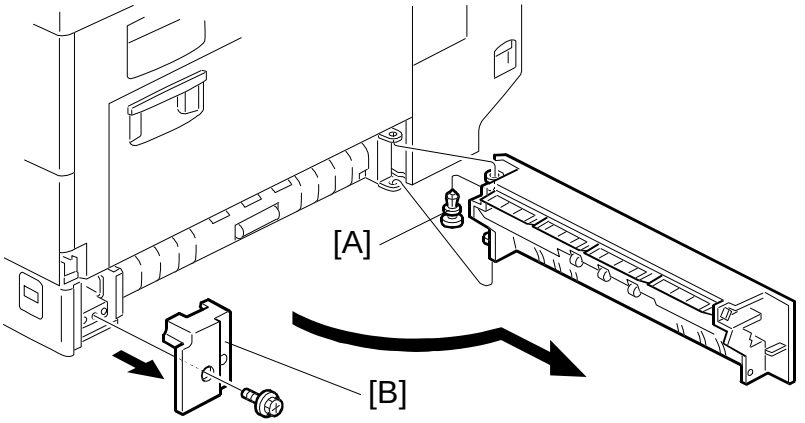

A250R715.WMF

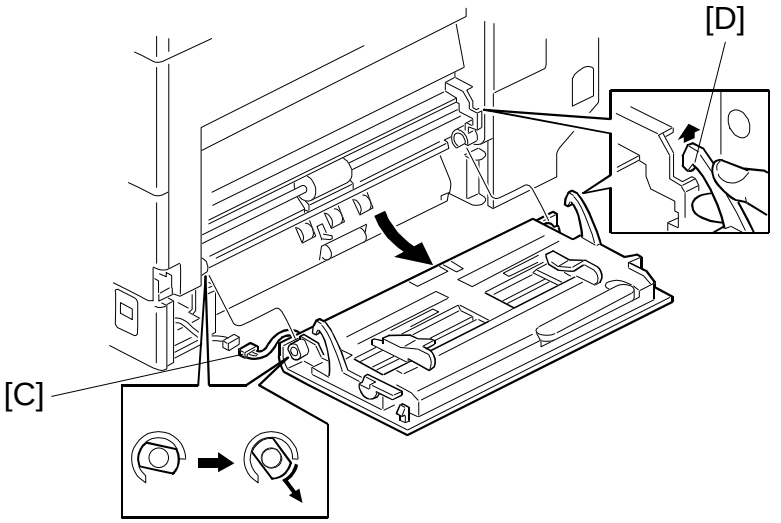

A250R716.WMF

1. Open the vertical transport cover and remove the pin [A].
2. Remove the front right cover [B] (1 screw).
3. Disconnect the by-pass tray sensor connector [C].
4. While lifting the hook [D] upward, lower the by-pass tray and remove it as shown.

NOTE: Be sure to unhook the hooks or they may break.

6.6.9 BY-PASS FEED PAPER WIDTH SENSOR REMOVAL

Preparation

1) Remove the by-pass tray (Refer to By-pass Tray Removal, section 6.6.8.).

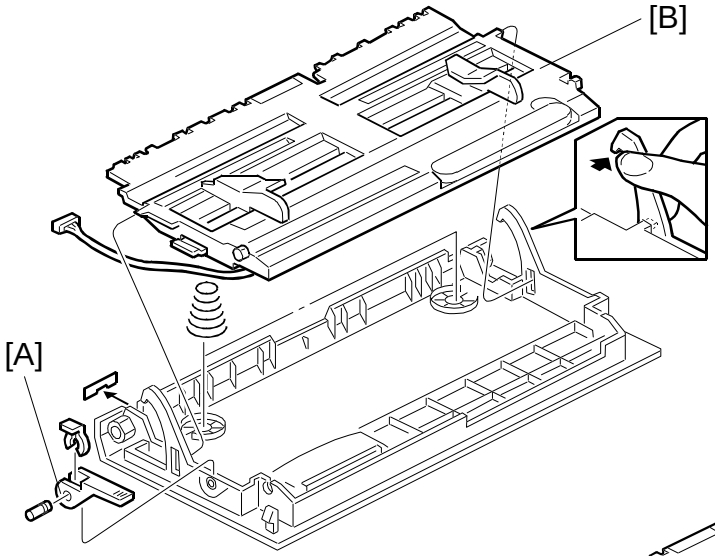

A250R717.WMF

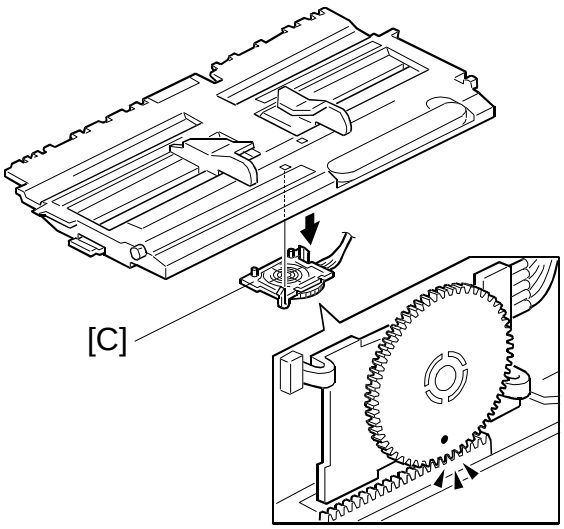

A250R718.WMF

1. Remove the tray lever [A] (1 snap ring and 1 pin).
2. Remove the upper by-pass tray [B] (1 mylar and 2 hooks).
3. Replace the by-pass feed paper width sensor [C].

NOTE: 1) Be sure to unhook the hooks or they may break.
2) When reinstalling the by-pass feed paper width sensor, move the paper guides to the center position.
Adjust the position of the hole in the sensor gear as shown when installing the paper width sensor.

6.6.10 REGISTRATION ROLLER REMOVAL

Preparation

1) Remove the by-pass paper feed roller cover. (Refer to By-pass Paper Feed Roller Removal, section 6.6.5.)
2) Remove the rear cover. (Refer to Exterior Removal, section 6.1.)
3) Remove the main motor and gearbox. (Refer to Main Motor and Gearbox Removal, section 6.7.)

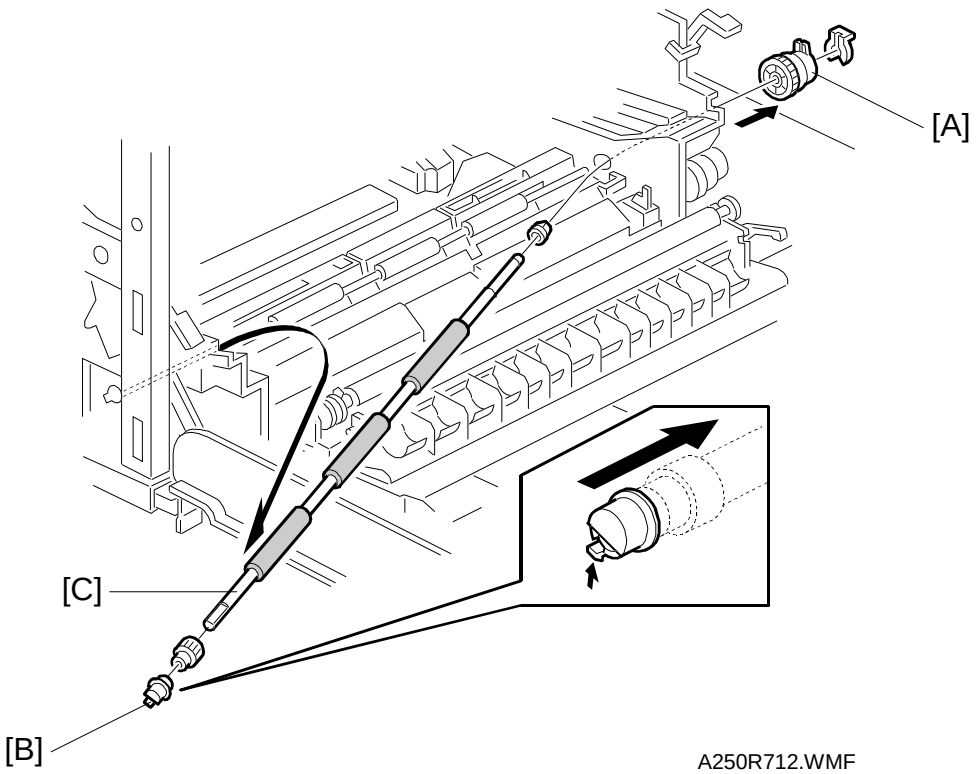

1. Remove the registration roller clutch [A] (1 snap ring).
2. Remove the bushing, as shown [B].
3. Replace the registration roller [C].

6.6.11 REGISTRATION SENSOR REPLACEMENT

Preparation

1) Remove the gearbox. (Refer to Main Motor and Gearbox Removal, section 6.7.)

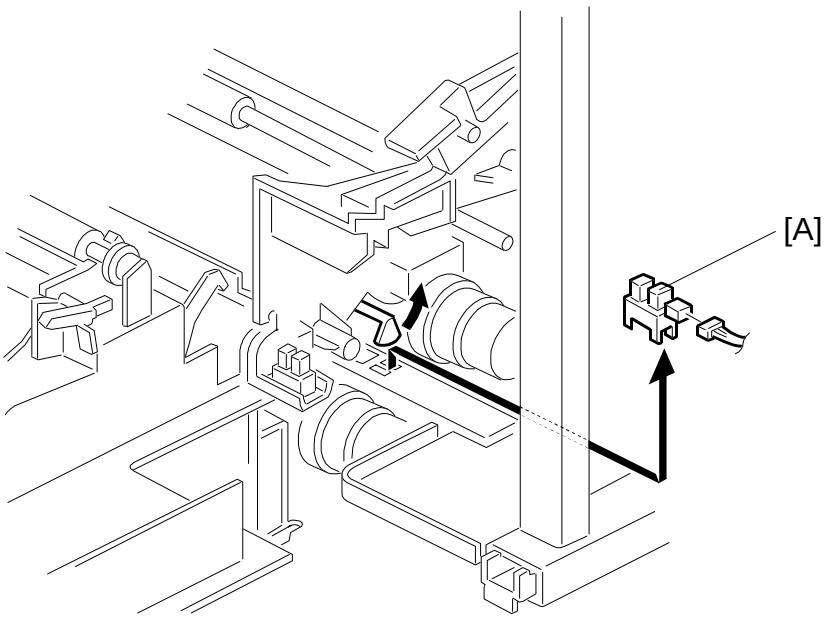

A250R713.WMF

1. Remove the registration sensor connector.
2. Replace the registration sensor [A], as shown.

6.6.12 TONER END SENSOR REPLACEMENT

Preparation

1) Remove the AIO cartridge.

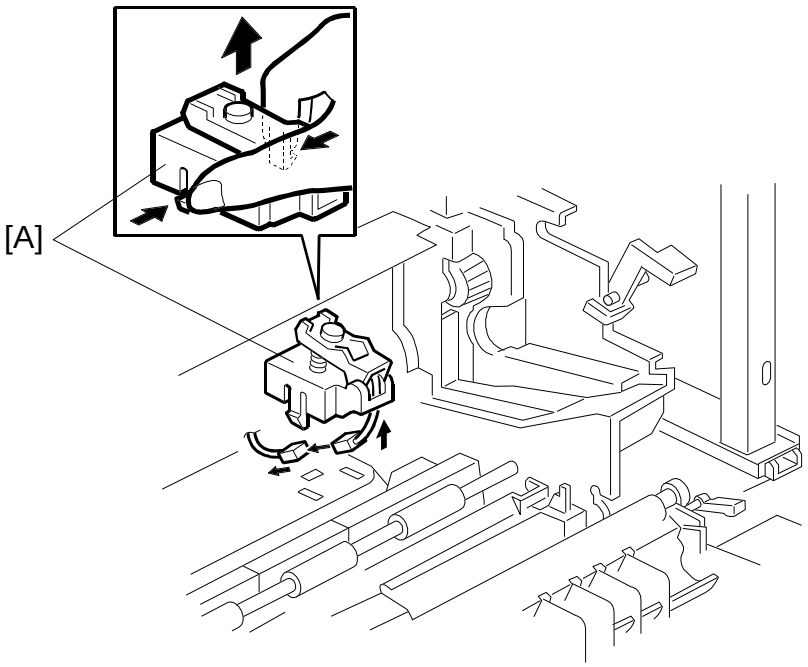

A250R702.WMF

1. Replace the toner end sensor [A], as shown (1 connector).

6.7 OTHERS

6.7.1 MAIN MOTOR/GEAR BOX REPLACEMENT

Preparation

1) Remove the rear cover.
2) Remove the by-pass feed roller (refer to By-pass Feed Roller Replacement, section 6-6-5).

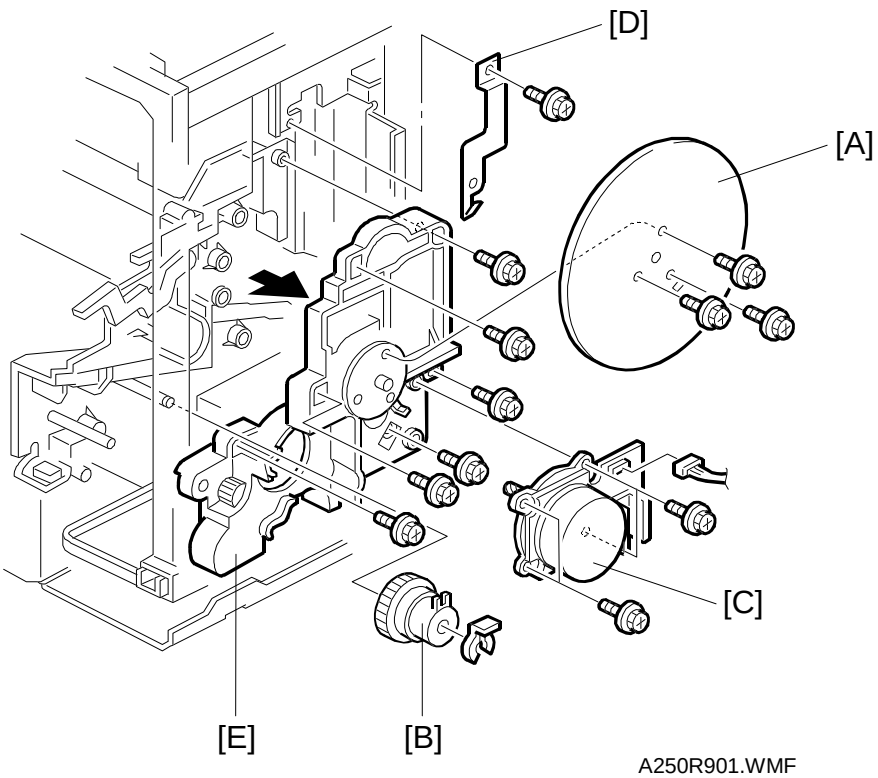

1. Remove the flywheel [A] (3 screws).
2. Remove the registration roller clutch [B].
3. Remove the main motor [C] (1 connector and 4 screws).
4. Remove the grounding plate [D] (1 screw).
5. Remove the gear box [E] (6 screws).

6.7.2 IOB (INPUT OUTPUT BOARD) REPLACEMENT

Preparation

1) Remove the rear cover.

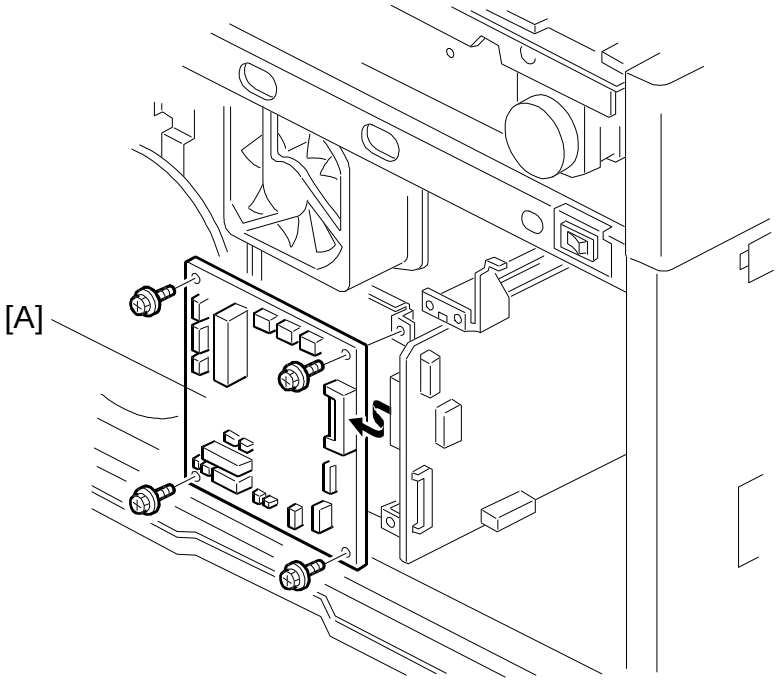

A250R906.WMF

1. Replace the input output board [A] (4 screws and all connectors).

6.7.3 BICU (BASE-ENGINE IMAGE CONTROL UNIT) REPLACEMENT

Preparation

1) Remove the left cover.

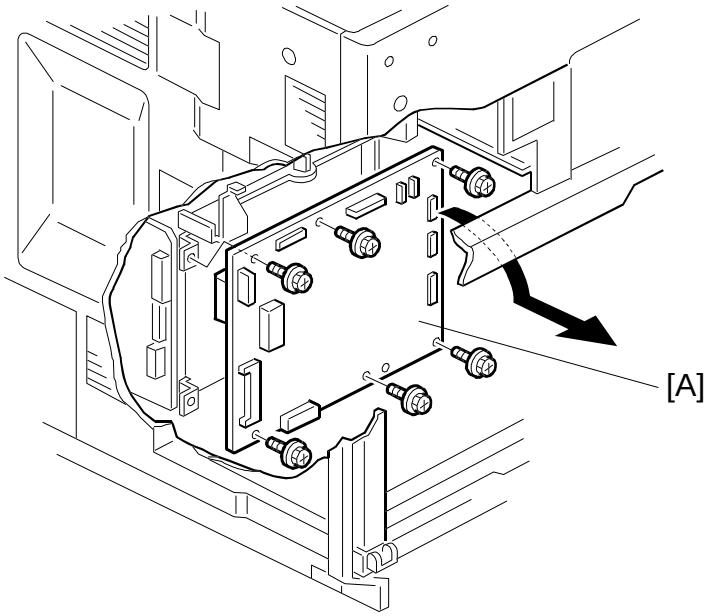

A250R905.WMF

1. Remove the base-engine image control unit [A] (6 screws and all connectors).
2. Re-install the NVRAM from the old board in the socket on the new board.

6.7.4 POWER SUPPLY UNIT AND B/C/T POWER PACK REPLACEMENT

Preparation

1) Remove the left cover.

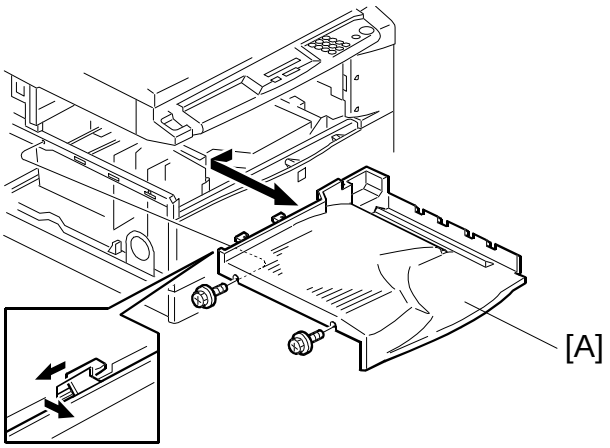

A250R904.WMF

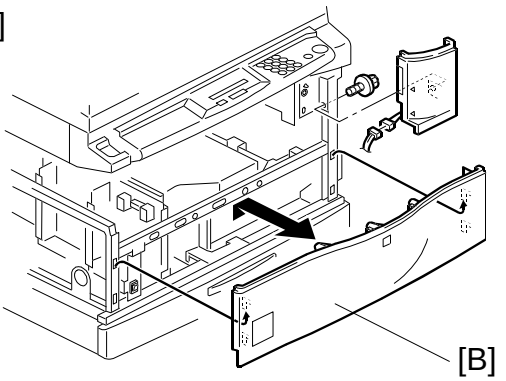

A250R903.WMF

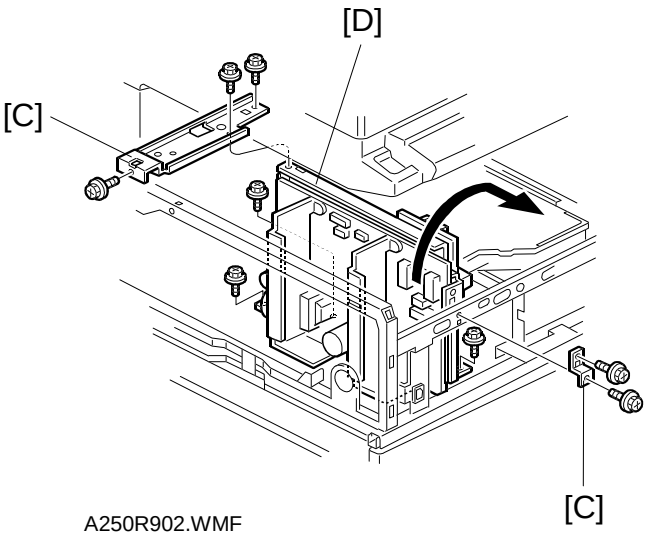

A250R902.WMF

1. Remove the exit tray [A] (2 screws).
2. Remove the front cover [B].
3. Remove all connectors.
4. Remove the two bracket holders [C] (5 screws).
5. Remove the power supply unit and B/C/T power pack [D] (3 screws).
   NOTE: Both boards are in this assembly. Take out whichever board needs replacing.

6.8 STANDARD WHITE DENSITY ADJUSTMENT

This is to adjust the standard white density level.

Perform this adjustment in any of the following conditions:

- After replacing the standard white plate.
- After replacing the NVRAM on the BICU. (If only the BICU is replaced, this adjustment is not necessary, as long as the NVRAM from the old BICU is put on the new BICU.)
- After performing a memory all clear (SP5-801).

Procedure:

1. Place 10 sheets of new A4 sideways or A3 paper on the exposure glass and close the platen cover or the ADF.
2. Enter SP4-908 and select “1: YES”. The standard white density is automatically adjusted.

6.9 COPY ADJUSTMENT PRINTING/SCANNING

NOTE: 1) You need to perform these adjustment(s) after replacing any of the following parts:
- Scanner
- Lens Block/SBU Assembly
- Scanner Drive Motor
- Polygon Mirror Motor
- Paper Trays
- Paper Side Fence
- Memory All Clear

2) For more details about accessing SP modes, refer to section 4.

6.9.1 PRINTING

NOTE: 1) Make sure the paper is installed correctly in each paper tray before you start these adjustments.
2) Use the trimming area pattern (SP5-902, No.10) to print the test pattern for the following procedures.
3) Set SP 5-902 to 0 again after completing these printing adjustments.

Registration - Leading Edge/Side-to-Side

1. Check the leading edge registration, and adjust it using SP1-001. The specification is 2 ± 1.5 mm
2. Check the side-to-side registration for each paper feed station, and adjust them using the following SP modes.

	SP mode	Specification
1st paper feed	SP1-002-1	2 ± 1.5 mm
2nd paper feed (Optional PFU tray 1)	SP1-002-2	2 ± 1.5 mm
3rd paper feed (Optional PFU tray 2)	SP1-002-3	2 ± 1.5 mm
By-pass feed	SP1-002-4	2 ± 1.5 mm

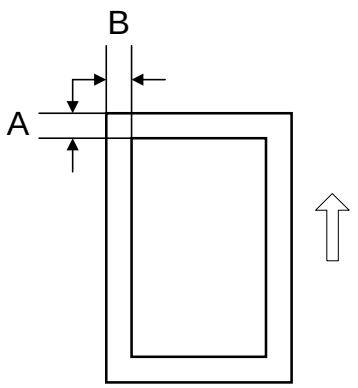

A: Leading edge registration
B: Side-to-side registration

A250R512.WMF

Blank Margin

NOTE: If the leading edge/side-to-side registration cannot be adjusted within the specifications, adjust the blank margin for the leading/left side edge.

1. Check the trailing edge and blank margin for the right side edge. Adjust them using the following SP modes.

	SP mode	Specification
Trailing edge	SP2-101-2	More than 0.5 mm
Right side edge	SP2-101-4	More than 0.5 mm
Leading edge	SP2-101-1	2 ± 1.5 mm
Left side edge	SP2-101-3	2 ± 1.5 mm

A: Blank margin for the trailing edge
B: Blank margin for the right side edge
C: Blank margin for the leading edge
D: Blank margin for the left side edge

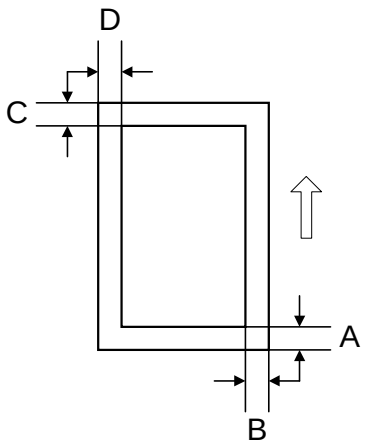

A250R513.WMF

Main Scan Magnification

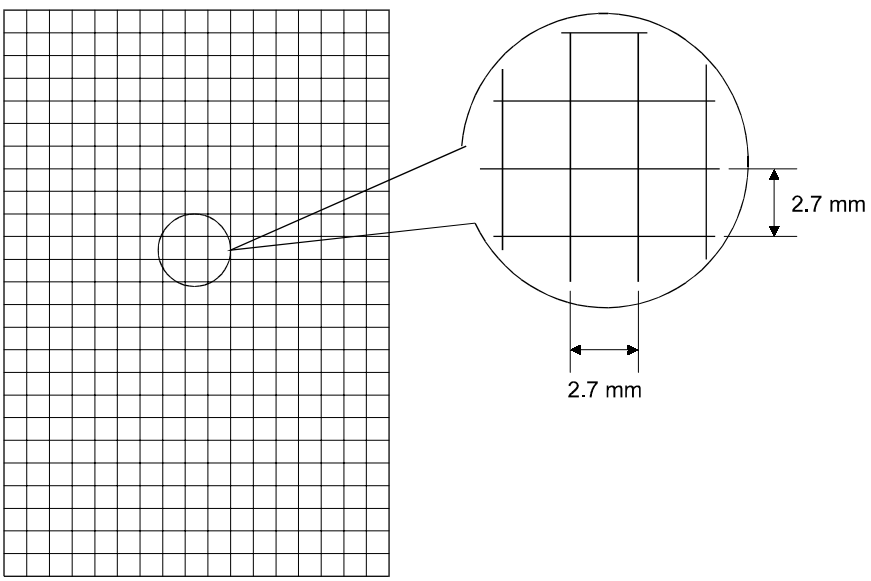

A250R524.WMF

1. Print the Grid Pattern (SP5-902, No.5).
2. Check the magnification (the grid size should be 2.7 mm), and adjust the magnification using SP2-998 if necessary. The specification is ±0.5%.

6.9.2 SCANNING

NOTE: 1) Before doing the following scanner adjustments, check and adjust the printing registration/side-to-side adjustment and the blank margin adjustment,
2) Use an OS-A3 test chart to perform the following adjustments.

Registration: Platen Mode

1. Place the test chart on the exposure glass and make a copy from one of the feed stations.
2. Check the leading edge and side-to-side registration, and adjust them using the following SP modes if necessary.

	SP mode
Leading edge	SP4-010
Side-to-side edge	SP4-011

A: Leading edge registration
B: Side-to-side registration

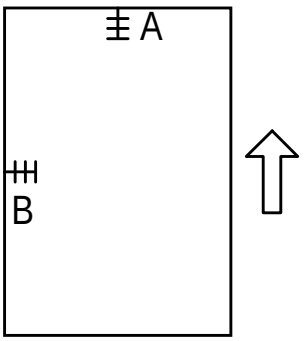

A250R515.WMF

Magnification

NOTE: Use an OS-A3 test chart to perform the following adjustment.

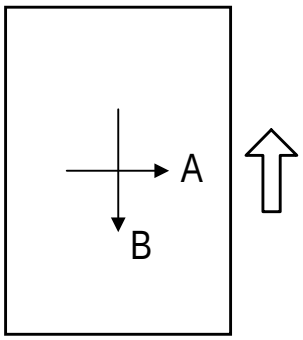

A: Main scan magnification
B: Sub-scan magnification

A250R517.WMF

Main Scan Magnification

1. Place the test chart on the exposure glass and make a copy from one of the feed stations.
2. Check the magnification ratio, and adjust it using the following SP mode if necessary. The specification is ±0.5%.

	SP mode
Main Scan Magnification	SP4-008

Sub-scan Magnification

1. Place the test chart on the exposure glass and make a copy from one of the feed stations.
2. Check the magnification ratio, and adjust it using the following SP mode if necessary. The specification is ±0.5%.

	SP mode
Sub-scan magnification	SP4-101

6.9.3 ADF IMAGE ADJUSTMENT

Registration and Blank Margin

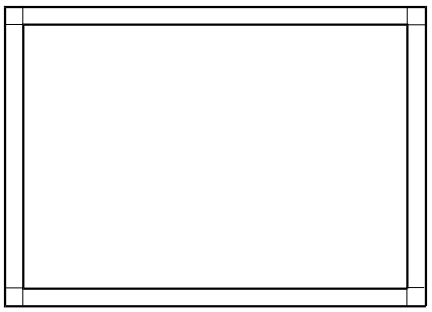

A250R516.WMF

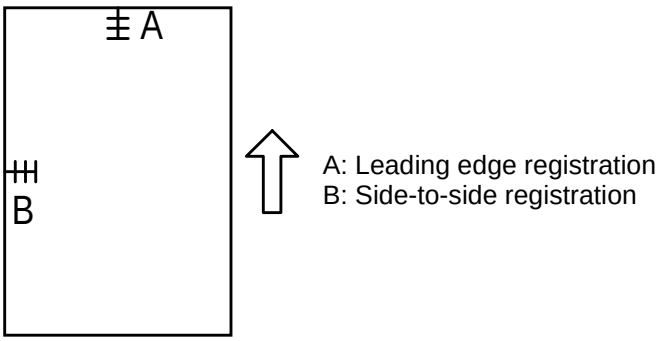

A250R515.WMF

NOTE: Make a temporary test chart as shown above using A3/11" x 17" paper.

1. Place the temporary test chart on the ADF and make a copy from one of the feed stations.
2. Check the registration, and adjust it using the following SP modes if necessary.

	SP mode
Side-to-side registration	SP6-006-1
Leading edge registration	SP6-006-2
Blank margin for the trailing edge	SP6-006-3

Sub-scan Magnification

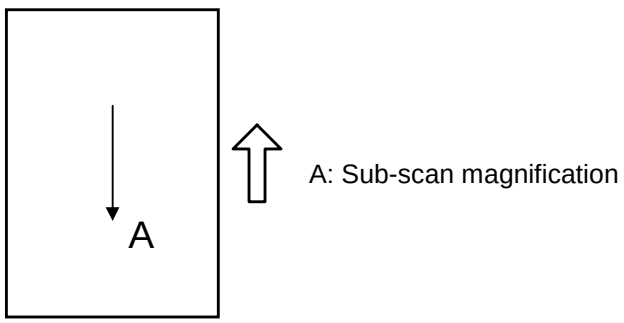

A250R526.WMF

NOTE: Make a temporary test chart as shown above using A3/11" x 17" paper.

1. Place the temporary test chart on the ADF and make a copy from one of the feed stations.
2. Check the registration, and adjust using SP 6-007 if necessary. The specification is ±0.5%.

7. TROUBLESHOOTING

7.1 SERVICE CALL CONDITIONS

7.1.1 SUMMARY

There are 4 levels of service call conditions

Level	Definition	Reset Procedure
A	To prevent the machine from being damaged, the SC can only be reset by a service representative (see the notes below). The copier is not operational.	Enter SP mode, then turn the main power switch off and on.
B	Turning the main power switch off and on can reset the SC if incorrect sensor detection caused the SC.	Turn the operation switch or main power switch off and on. Turning the main power switch off and on can only reset a level B SC.
C	The copier works normally except for the unit related to the service call.	Turn the operation switch off and on.
D	The SC history is updated. The machine operates as usual.	The SC is not displayed. All that happens is that the SC history is updated.

NOTE: 1) If the problem concerns electrical circuit boards, first disconnect then reconnect the connectors before replacing the PCBs.
2) If the problem concerns a motor lock, first check the mechanical load before replacing motors or sensors.
3) To reset a level A SC, enter SP5-810 (SC code reset) and select “1”. Then hold down the “Photo mode” key and the # key at the same time for at least 3 seconds (it is not necessary to turn the main switch off and on). If the machine beeps 5 times, the reset was successful. If it only beeps twice, the reset failed, and you need to repair the machine some more.
4) When a level A or B SC occurs while in SP mode, the display does not indicate the SC number. If this occurs, check the SC number after exiting SP mode. This does not apply to level B codes.

7.1.2 SC CODE DESCRIPTIONS

SC101: Exposure Lamp Error

Definition: [B]

The standard white level was not detected properly when scanning the white plate.

Possible Causes:

- Exposure lamp defective
- Lamp stabilizer defective
- Exposure lamp connector defective
- Dirty standard white plate
- Scanner mirror dirty or out of position
- SBU board defective
- SBU connector defective
- Lens block out of position

SC120: Scanner Home Position Error 1

Definition: [B]

The scanner home position sensor does not detect the off condition during initialization or copying.

Possible Causes:

- Scanner home position sensor defective
- Scanner drive motor defective
- Scanner home position sensor connector defective
- Scanner drive motor connector defective

SC121: Scanner Home Position Error 2

Definition: [B]

The scanner home position sensor does not detect the on condition during initialization.

Possible Causes:

- Scanner home position sensor defective
- Scanner drive motor defective
- Scanner home position sensor connector defective
- Scanner drive motor connector defective

SC122: Scanner Home Position Error 3

Definition: [B]

The scanner home position sensor detects the on condition while the scanner returns to the home position.

Possible Causes:

- Scanner home position sensor defective
- Scanner drive motor defective
- Exposure lamp connector defective
- Scanner home position sensor connector defective
- Scanner drive motor connector defective

SC123: Scanner Home Position Error 4

Definition: [B]

The scanner home position sensor does not detect the on condition after the scanner returns to the home position.

Possible Causes:

- Scanner home position sensor defective
- Scanner drive motor defective
- Scanner home position sensor connector defective
- Scanner drive motor connector defective

SC192: Automatic SBU Adjustment Error

Definition: [B]

An error is detected during automatic SBU adjustment (SP4-908).

Possible Causes:

- SBU defective
- BICU board defective
- Exposure lamp regulator defective
- Exposure lamp defective
- Dirty white plate

SC194: IPU White Level Detection Error

Definition: [B]

The level of the white standard pattern detected by the IPU (on the BICU board) is too low.

Possible Causes:

- Exposure lamp defective
- BISU board defective
- Incorrect position of the white standard pattern
- Dirty white plate
- SBU board

SC302: Charge Roller Current Leak

Definition: [B]

A current leak signal for the charge roller is detected.

Possible Causes:

- Charge roller damaged
- Power pack-B/C/T
- Poor connection of the OPC drum in the all-in-one cartridge

SC320: Polygonal Mirror Motor Error

Definition: [B]

The lock signal for the polygon mirror motor is not detected within 4 seconds after the polygon motor on signal, or the lock signal is not activated for more than 200 ms after the polygon motor lock signal.

Possible Causes:

- Polygonal mirror motor defective
- Poor connection between the polygonal mirror motor driver and the BICU board
- BICU board defective

SC321: No Laser Writing Signal (F-GATE) Error

Definition: [B]

The laser writing signal (F-GATE) is still not LOW when the laser writing area +5 mm has passed since the laser writing start position on the drum.

Possible Causes:

- BICU board defective
- MSU board defective
- The fax controller or printer controller has a poor connection.
- Fax controller or printer controller defective

SC322: Laser Synchronization Error

Definition: [B]

The laser synchronization signal cannot be detected by the main scan synchronization detector board for more than 5 consecutive 100 intervals.

Possible Causes:

- The cable between the laser synchronization detector board and the BICU board has a poor connection.
- Laser synchronization detector board out of position
- Laser synchronization detector board defective
- BICU board defective
- LD unit defective

SC324: LD Drive Current Over

Definition: [B]

The LD drive board applies more than 100 mA to the LD.

Possible Causes:

- LD unit defective (not enough power, due to aging)
- Poor connection of the cable between the LD unit and the BICU board
- BICU board defective

SC391: Development Bias Leak

Definition: [B]

A development bias leak signal is detected.

Possible Causes:

- Defective development roller in the all-in-one cartridge.
- Power pack-B/C/T defective

SC401: Transfer Roller Positive Current Error

SC402: Transfer Roller Negative Current Error

Definition: [B]

A current leak signal for the transfer roller is detected.
The current feedback signal for the transfer roller is not detected.

Possible Causes:

- Power pack-B/C/T defective
- Transfer unit set incorrectly
- Poor connection of the drum unit in the all-in-one cartridge
- Transfer roller damaged

SC500: Main Motor Lock

Definition: [B]

The main motor lock signal is not detected for more than 700 ms after the main motor starts to rotate, or the lock signal is not detected for more than 700 ms during rotation after the last lock signal.

Possible Causes:

- Too much load on the drive mechanism
- Main motor defective

SC502: 2nd Tray Lift Malfunction

SC503: 3rd Tray Lift Malfunction

Definition: [C]

The paper lift sensor is not activated after the tray lift motor has been on for 13 seconds.

Possible Causes:

- Tray upper lift sensor defective
- Tray lift motor defective
- Poor tray lift motor connection
- Too much load on the drive mechanism

SC506: Paper Tray Motor Lock (Optional Paper Tray Unit Only)

Definition: [C]

A motor lock signal is not detected for more than 1.5 s after the motor starts rotation, or the lock signal is not detected for more than 1.0 s after the last lock signal detection.

Possible Causes:

- Paper tray motor defective
- Too much load on the drive mechanism

SC542: Fusing Temperature Warm-up Error

Definition: [A]

After the main switch is turned on, the fusing temperature either does not reach 130°C within 50 seconds, or does not reach the printing temperature within 70 seconds.

Possible Causes:

- Fusing thermistor defective or out of position
- Fusing lamp open
- Fusing thermofuse open
- Power supply unit defective
- Poor connection of the fusing unit

SC543: Fusing Overheat Error

Definition: [A]

A fusing temperature of over 231°C is detected for 1 second by the fusing thermistor.

Possible Causes:

- Fusing thermistor defective
- Power supply unit defective

SC544: Fusing Low Temperature Error

Definition: [A]

A fusing temperature of less than 100°C is detected for 1 second by the fusing thermistor.

Possible Causes:

- Fusing thermistor defective
- Power supply unit defective

SC546: Unstable Fusing Temperature

Definition: [A]

The fusing temperature does not rise 3°C or more within 5 seconds after the fusing lamp has been on 8 seconds.

Possible Causes:

- Thermistor defective
- Poor connection of the fusing unit
- Power supply unit defective

SC547: Zero Cross Signal Malfunction

Definition: [A]

Zero-cross signals are not detected within a certain period.

Possible Causes:

- Power supply unit defective
- Input output board
- BICU defective

SC620: Communication Error between BICU and ADF

Definition: [B]

The BICU cannot receive a response from the ADF main board for 4 seconds or more.

Possible Causes:

- Poor connection between the BICU board and ADF main board (DF connector)
- ADF main board defective
- BICU board defective

SC630: [D] CSS (RSS) Communication Error between Line Adapter and CSS Center

Japanese version only

SC691: Communication Error between BICU and Fax Controller Unit

Definition: [B]

The BICU board cannot communicate with the fax control unit properly.

Possible Causes:

- The cable between the BICU board and the fax control unit has a poor connection
- BICU board defective
- Fax control unit defective

SC692: Communication Error between BICU and Printer Controller Board

Definition: [B]

The BICU board cannot communicate with the printer controller board properly.

Possible Causes:

- The cable between the BICU board and the mother board has a poor connection.
- The connection between the mother board and the printer controller board is poor.
- BICU board defective
- Printer controller board defective
- Mother board defective

SC760: ADF Gate Abnormal

Definition: [B]

The ADF Gate signal line between the ADF main board and the input/output board is disconnected.

Possible Causes:

- ADF main board defective
- Input/output board defective
- The connection (ADF Gate line) between the ADF main board and the input/output board is poor.

SC900: Electrical Total Counter Error

Definition: [B]

The electrical total counter is not working properly.

Possible Causes:

- NVRAM defective

SC901: Mechanical Total Counter

Definition: [B]
The mechanical total counter is not working properly.

Possible Causes:
- Mechanical total counter defective
- Input/output board defective
- Disconnected mechanical total counter

SC921: MSU Hardware Error

Definition: [B]
The hardware of the MSU is defective.

Possible Causes:
- MSU defective
- BICU defective

SC980: Program Loading Error

Definition: [A]
The program cannot load properly.

Possible Causes:
- The connection between the BICU and the ROM board is poor.
- BICU board defective
- ROM board or the program defective

NOTE: This SC should be cleared by trying to download again from an IC Card.

SC990: Communication Error between BICU and Input Output Board

Definition: [B]
The BICU board cannot communicate with the input/output board.

Possible Causes:
- The connection between the BICU board and the input/output board is poor.
- BICU board defective
- Input/output board defective

SC999: Program Version Error

Definition: [B]
The incorrect type of main software was downloaded.

Possible Causes:
- The main software for another machine was downloaded to this machine.

7.2 BLOWN FUSE TABLE

Fuse	Rating		Symptom when tuning on the main switch
	115 V	220 ~ 240 V	
FU1	15 A/250 V	—	No response.
FU2	8 A/125 V	3.15 A/250 V	No response.
FU3	3.15 A/125 V	3.15 A/250 V	Normal operation. But optional heater is not working (when turning off the main switch).
FU4	4 A/125 V	4 A/250 V	"Doors/Covers Open" LED is displayed then SC901 is displayed.
FU5	4 A/125 V	4 A/250 V	The original jam will be occurred whenever a copy is made.
FU6	2 A/125 V	2 A/250 V	"Doors/Covers Open" and "Paper Jam" LEDs are displayed then SC990 is displayed.

7.3 ELECTRICAL COMPONENT DEFECTS

7.3.1 SWITCHES

Symbol	Description	CN No.	Condition	Symptom
SW1	Main		Open	The copier does not turn on.
			Short	The copier does not turn off.
SW2	Right Door Switch 1	306-6	Open	Doors/Covers open is displayed even if the right door is closed.
			Short	LD5 V line is not cut even if the right door is opened.
SW3	Right Door Switch 2	306-4	Open	Doors/Covers open is displayed even if the right door is closed.
			Short	Doors/Covers open is not displayed even if the right door is opened.
SW4	Vertical Transport Cover Switch	306-2	Open	Doors/Covers open is displayed even if the right door is closed.
			Short	Doors/Covers open is not displayed even if the right door is opened.
SW5	Paper Size	323-1, 2, 4	Open	The CPU cannot detect proper paper size, and misfeeds may occur when a copy is made.
			Short	

7.3.2 SENSORS

Symbol	Description	CN No.	Condition	Symptom
S1	Scanner HP	327-8	Open	SC194 is displayed.
			Short	SC120 is displayed.
S2	Original Width	320-8, 9	Open	The CPU cannot detect proper original size.
S3	Original Length 1	320-3, 4		
S4	Original Length 2	324-3, 4	Short	
S5	Toner Near-End	322-2	Open	Toner end is displayed even if there are toner in the AIO cartridge.
			Short	Toner near end condition cannot be detected in toner near end condition.
S6	Paper End	325-2	Open	Paper end condition even if paper is loaded in the tray.
			Short	Paper end condition cannot be detected even if there is no paper in the tray, paper jam occurs.
S8	By-pass Tray Paper	309-5	Open	Paper cannot be detected when paper is placed in the by-pass table.
			Short	By-pass paper misfeed occurs.
S9	By-pass Paper Size	321-2, 4, 5	Open	The CPU cannot detect proper paper size in the by-pass tray.
			Short	
S10	Vertical Transport	321-7	Open	Misfeed is detected after paper pass through the vertical transport sensor.
			Short	Misfeed is detected even if there is no paper.
S11	Registration	309-2	Open	Misfeed is detected after paper pass through the registration sensor.
			Short	Misfeed is detected even if there is no paper.
S12	Fusing Exit	303-6	Open	Misfeed is detected after paper pass through the fusing exit sensor.
			Short	Misfeed is detected even if there is no paper.
S13	Exit Tray Paper	321-10	Open	Exit tray LED does not turn on even if there is paper left in the exit tray.
			Short	Exit tray LED turns on even if there is no paper in the exit tray.
S14	Platen Cover	327-5	Open	Original size cannot be detected.
			Short	The correct original size may not be detected.
S15	AIO Set	323-6	Open	“Reset the toner cartridge” is displayed even if the AIO cartridge is installed.
			Short	SC402 is displayed.

ELECTRICAL COMPONENT LAYOUT (A250/A859/A860/A861/A869)

- A250 -

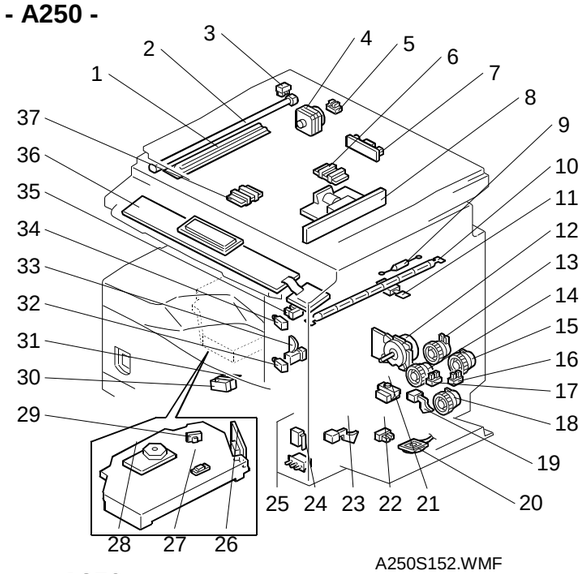

A250S152.WMF

- A250 -

Symbol	Index No.	Description	P to P
Motors			
M1	4	Scanner	K2
M2	28	Polygonal Mirror	C8
M3	12	Main	G2
M4	46	Exhaust Fan	B2
Magnetic Clutches			
MC1	14	Paper Feed	F2
MC2	15	By-pass Feed	C2
MC3	18	Vertical Transport	F2
MC4	13	Registration	B2
Switches			
SW1	40	Main	B7
SW2	30	Right Door Switch 1	A2
SW3	31	Right Door Switch 2	A2
SW4	25	Vertical Transport Cover Switch	B2
SW5	24	Paper Size	L2
Sensors			
S1	3	Scanner HP	K2
S2	37	Original Width	J2
S3	6	Original Length 1	I2
S4	6	Original Length 2	I2
S5	21	Toner Near-End	B2
S6	23	Paper End	B2
S7	19	Paper Near-End	C2
S8	16	By-pass Tray Paper	D2
S9	20	By-pass Paper Size	D2
S10	22	Vertical Transport	E2
S11	17	Registration	D2
S12	35	Fusing Exit	A4
S13	27	Exit Tray Paper	E2
S14	5	Platen Cover	J2
S15	33	AIO Set	L2
PCBs			
PCB1	44	BICU	E9
PCB2	39	PSU	C7
PCB3	45	IOB	E3
PCB4	8	SBU	C9
PCB5	7	Lamp Stabilizer	J2
PCB6	26	LD Unit	C8
PCB7	36	Operation Panel	E10
PCB8	—	Memory (option)	G9
PCB9	42	Printer Controller (option)	G9
PCB10	43	FCU (Option)	F10
PCB11	47	NCU (option)	—

- A250 -

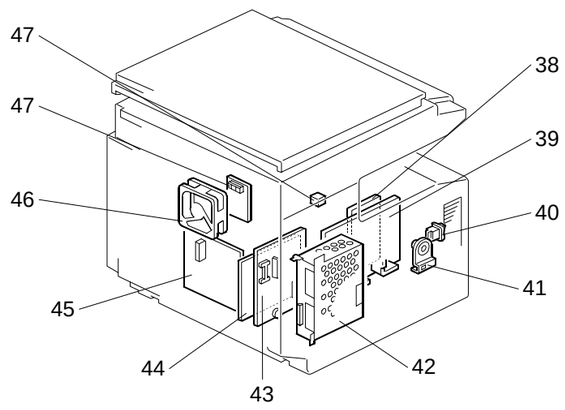

A250S153.WMF

- A250 -

Symbol	Index No.	Description	P to P
Lamps			
L1	2	Exposure Lamps	J2
L2	10	Fusing Lamp	A5
Heaters			
H1	1	Anti-Condensation	A6
H2	—	Drum (option)	A6
Others			
TF1	9	Fusing Thermofuse	A5
TH1	11	Fusing Thermistor	A4
PP1	38	C/B/T	H2
LSD 1	29	Laser Synchronization Detector	C9
CO1	48	Total	F2
CO2	—	Key (option)	L1
LED1	32	Exit Tray	E2
LED2	34	1-bin Tray	F2
SP1	41	Speaker	—

- A869 -

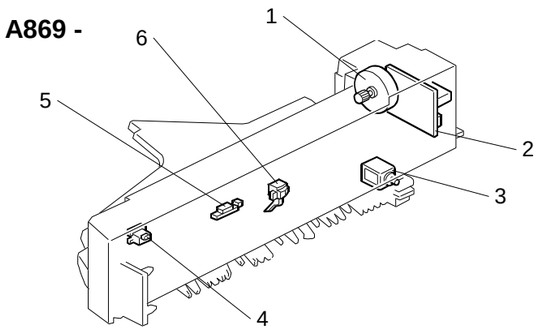

A869S103.WMF

- A869 -

Symbol	Index No.	Description	P to P
Motors			
M1	1	Tray	M1
Sensors			
S1	6	Exit	N1
S2	5	Paper	N1
Switches			
SW1	4	Bin Tray	N1
PCBs			
PCB1	2	1 Bin Tray	N2
LEDs			
LED1	7	1 Bin Exit Tray	F2
Solenoid			
SOL1	3	Junction Gate	M1

- A860 -

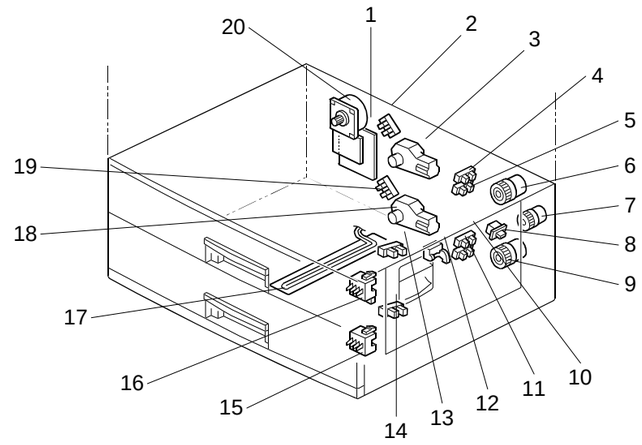

A860S102.WMF

- A860 -

Symbol	Index No.	Description	P to P
Motors			
M1	20	Tray	L8
M2	3	Upper Lift	N8
M3	18	Lower Lift	M8
Sensors			
S1	2	Upper Lift	M8
S2	19	Lower Lift	M8
S3	13	Upper Paper End	J8
S4	14	Lower Paper End	J8
S5	12	Vertical Transport	I8
S6	15	Upper Paper Size	I8
S7	16	Lower Paper Size	I8
S8	5	Upper Paper Height 1	H8
S9	4	Upper Paper Height 2	H8
S10	11	Lower Paper Height 1	G8
S11	10	Lower Paper Height 2	G8
Switches			
SW1	8	Tray Cover	J8
Magnetic Clutches			
MC1	6	Upper Paper Feed	J8
MC2	9	Lower Paper Feed	K8
MC3	7	Relay	K8
PCBs			
PCB1	1	Tray Main	K7
Others			
H1	17	Option Tray Heater	N8

- A861 -

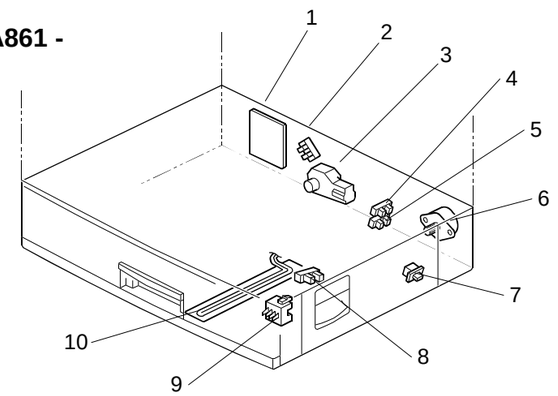

A861S102.WMF

- A859 -

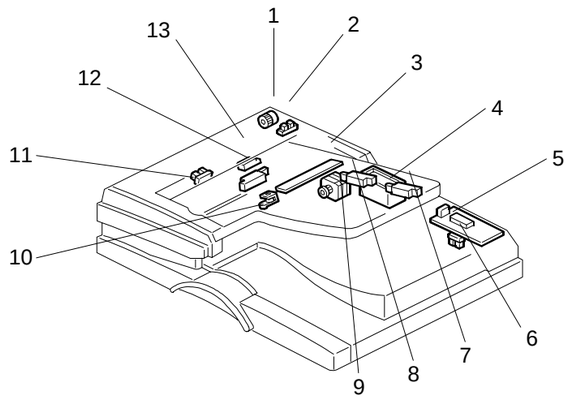

A859S102.WMF

- A859 -

Symbol	Index No.	Description	P to P
Motors			
M1	9	DF Transport	K6
Sensors			
S1	6	DF Open	M6
S2	13	Registration	L6
S3	2	Feed Cover Open Sensor	M6
S4	3	Original Width	M6
S5	8	Original Length 1	N6
S6	7	Original Length 2	N6
S7	11	Original Set	L6
S8	12	Original Trailing Edge	N6
Solenoids			
SOL1	4	DF Pick-up	L6
SOL2	10	Stamper	K6
Clutches			
MC1	1	DF Feed	K6
PCBs			
PCB1	5	DF Drive	M5

- A861 -

- A861 -

Symbol	Index No.	Description	P to P
Motors			
M1	6	Paper Feed	J6
M2	3	Lift	H6
Sensors			
S1	2	Lift	G6
S2	8	Paper End	H6
S3	9	Paper Size	I6
S4	5	Paper Height 1	H6
S5	4	Paper Height 2	H6
Switches			
SW1	7	Tray Cover	I6
PCBs			
PCB1	1	Tray Main	H5
Others			
H1	10	Option Tray Heater	J6

A250 Point to Point Diagram

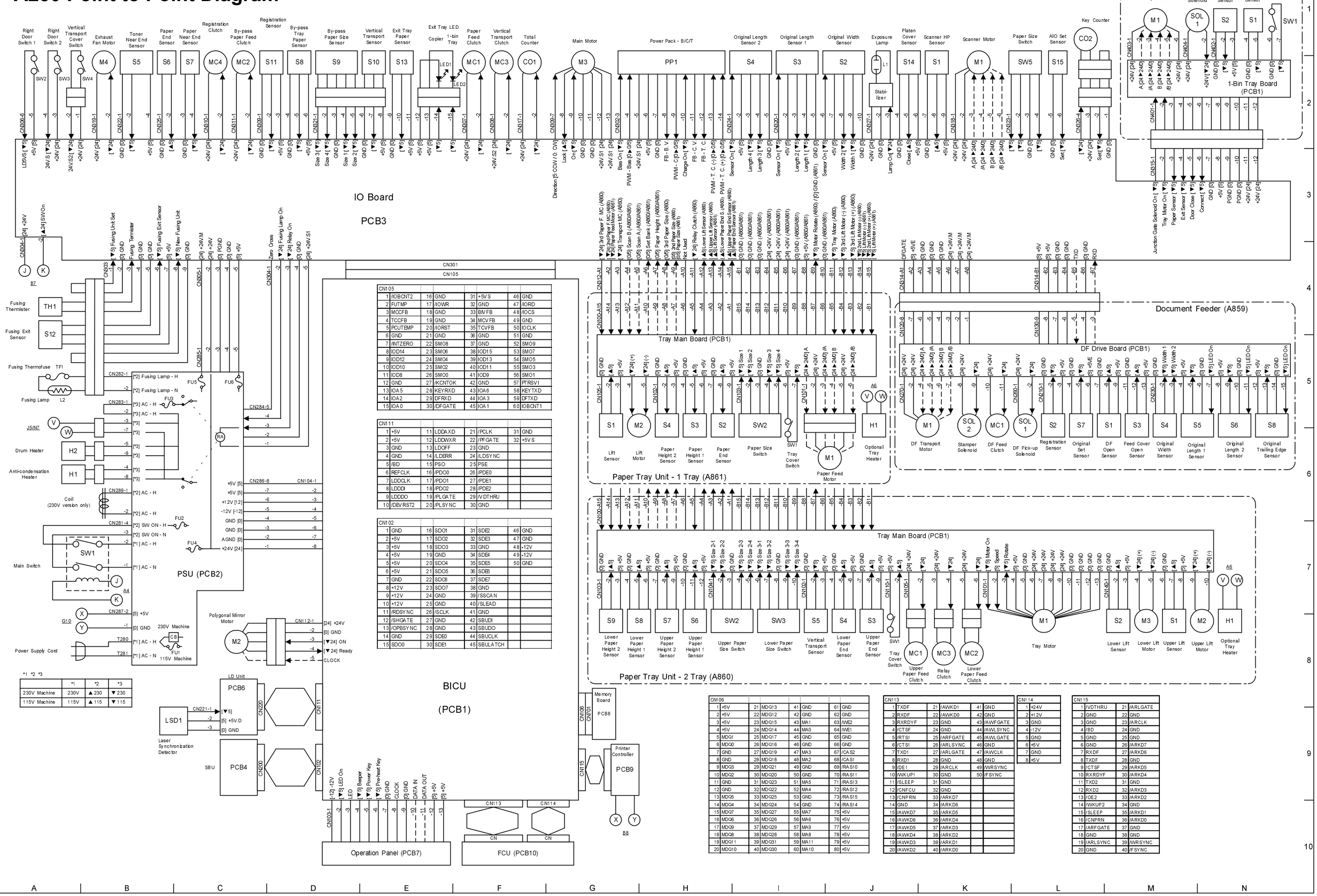

CN105					
1	/IOBCNT2	16	GND	31	+5V S
2	FUTMP	17	/IOWR	32	GND
3	MCCFB	18	GND	33	BMFB
4	TCCFB	19	GND	34	MCVFB
5	PCUTEMP	20	/IORST	35	TCVFB
6	GND	21	GND	36	GND
7	/INTZERO	22	SMO8	37	GND
8	IOD14	23	SMO6	38	IOD15
9	IOD12	24	SMO4	39	IOD13
10	IOD10	25	SMO2	40	IOD11
11	IOD8	26	SMO0	41	IOD9
12	GND	27	/KCNTOK	42	GND
13	IOA.5	28	KEYRXD	43	IOA.6
14	IOA.2	29	DFRXD	44	IOA.3
15	IOA.0	30	/DFGATE	45	IOA.1

CN111					
1	+5V	11	LDDAXD	21	/PCLK
2	+5V	12	LDDWXR	22	/PFGATE
3	GND	13	LDDCFF	23	GND
4	GND	14	/LDERR	24	/LDSYNC
5	/BD	15	PSO	25	PSE
6	REFCLK	16	/PDO0	26	/PDE0
7	LDDCLK	17	/PDO1	27	/PDE1
8	LDDDI	18	/PDO2	28	/PDE2
9	LDDDO	19	/PLGATE	29	/VDTHRU
10	/DEVRST2	20	/PLSYNC	30	GND

CN102					
1	GND	16	SDO1	31	SDE2
2	+5V	17	SDO2	32	SDE3
3	+5V	18	SDO3	33	GND
4	+5V	19	GND	34	SDE4
5	+5V	20	SDO4	35	SDE5
6	+5V	21	SDO5	36	SDE6
7	GND	22	SDO6	37	SDE7
8	+12V	23	SDO7	38	GND
9	+12V	24	GND	39	/SSCAN
10	+12V	25	GND	40	/SLEAD
11	/RDSYNC	26	/SCLK	41	GND
12	/SHGATE	27	GND	42	SBUDI
13	/OPBSYNC	28	GND	43	SBUDO
14	GND	29	SDE0	44	SBUCLK
15	SDO0	30	SDE1	45	SBULATCH

CN106					
1	+5V	21	MDQ13	41	GND
2	+5V	22	MDQ12	42	GND
3	+5V	23	MDQ15	43	MA1
4	+5V	24	MDQ14	44	MA0
5	MDQ1	25	MDQ17	45	GND
6	MDQ0	26	MDQ16	46	GND
7	GND	27	MDQ19	47	MA3
8	GND	28	MDQ18	48	MA2
9	MDQ3	29	MDQ21	49	GND
10	MDQ2	30	MDQ20	50	GND
11	GND	31	MDQ23	51	MA5
12	GND	32	MDQ22	52	MA4
13	MDQ5	33	MDQ25	53	GND
14	MDQ4	34	MDQ24	54	GND
15	MDQ7	35	MDQ27	55	MA7
16	MDQ6	36	MDQ26	56	MA6
17	MDQ9	37	MDQ29	57	MA9
18	MDQ8	38	MDQ28	58	MA8
19	MDQ11	39	MDQ31	59	MA11
20	MDQ10	40	MDQ30	60	MA10

CN113					
1	TXDF	21	/AWKD1	41	GND
2	RXDF	22	/AWKD0	42	GND
3	RXRDYF	23	GND	43	/AVFGATE
4	CTSF	24	GND	44	/AVLSYNC
5	RTS1	25	/ARFGATE	45	/AVLGATE
6	CTS1	26	/ARLSYNC	46	GND
7	TXD1	27	/ARLGATE	47	/AVCLK
8	RXD1	28	GND	48	GND
9	IDE1	29	/ARCLK	49	/AVRSYNC
10	/WKUP1	30	GND	50	/FSYNC
11	SLEEP	31	GND		
12	CNFCU	32	GND		
13	CNPRN	33	/ARKD7		
14	GND	34	/ARKD6		
15	/AWKD7	35	/ARKD5		
16	/AWKD6	36	/ARKD4		
17	/AWKD5	37	/ARKD3		
18	/AWKD4	38	/ARKD2		
19	/AWKD3	39	/ARKD1		
20	/AWKD2	40	/ARKD0		

CN114	
1	+24V
2	+12V
3	GND
4	-12V
5	GND
6	+5V
7	GND
8	+5V

CN115			
1	/VDTHRU	21	/ARLGATE
2	GND	22	GND
3	GND	23	/ARCLK
4	/BD	24	GND
5	GND	25	GND
6	GND	26	/ARKD7
7	RXDF	27	/ARKD6
8	TXDF	28	GND
9	CTSF	29	/ARKD5
10	RXRDYF	30	/ARKD4
11	TXD2	31	GND
12	RXD2	32	/ARKD3
13	OE2	33	/ARKD2
14	/WKUP2	34	GND
15	SLEEP	35	/ARKD1
16	CNPRN	36	/ARKD0
17	/ARFGATE	37	GND
18	GND	38	GND
19	/ARLSYNC	39	/WRSYNC
20	GND	40	/FSYNC

*1 *2 *3			
	*1	*2	*3
230V Machine	230V	▲230	▼230
115V Machine	115V	▲115	▼115