Model: NAD 30S/30/40	Date: 31-May-98	No: 1
Modified Article: China and Taiwan Version Information	Prepared by: S.Tomoe	
From: Technical Service Department.		

Reason for Modification:
☐ Parts catalog correction ☐ Vendor change ☐ To meet standards ( )
☐ To facilitate assembly ☐ To improve reliability
☐ Part standardization ☒ Other

The China and Taiwan version will be launched from July 1998. This MB includes parts information for the China and Taiwan version. So, please add this information to your NAD30/40 parts catalog.

- Both versions –

Old part number	New part number	Description	Qty	Int	Page	Index	Fig.
	A2309610	Side Fence Spacer – 5.1 mm (4pcs) (CHN/TWN)	0-1		33	*20	2
	A2309600	Side Fence Spacer – 7.2 mm (6pcs) (CHN/TWN)	0-1		33	*21	2
	A2309620	End Fence Spacer – 31 mm (CHN/TWN)	0-1		33	*22	2
	A2309630	End Fence Spacer – 16 mm (CHN/TWN)	0-1		33	*23	2

∗ New Index #

- China version –

Old part number	New part number	Description	Qty	Int	Page	Index	Fig. No.
A2327932		Operation Panel Ass'y (Asia)	1-1	X/X	9	15	
	A2327937	Operation Panel Ass'y (CHN)			17	*	
	A2326780	Decal – On (CHN)	0-1		11	*38	1
	A2326781	Decal – Stand-by (CHN)	0-1		11	*39	1
A2327237		Sheet – Image Editing (LT)(Asia)	1-1	X/X	17	1	
	A2327939	Sheet – Image Editing (CHN)					
AZ230076		Power Supply Unit - 230V	1-1	X/X	61	14	
	AZ230085	Power Supply Unit – CHN					
	A2308606	System Instruction Guide (CHN)	0-1		87	18	
	A2318606	Copy Instruction Guide (CHN)	0-1		87	19	
	A2328606	Copy Quick Guide (CHN)	0-1		87	20	

∗ New Index #

Model: NAD 30S/30/40	Date: 31-May-98	No: 1

- Taiwan version –

Old part number	New part number	Description	Qty	Int	Page	Index	Fig. No.
A2327632		Operation Panel Ass'y (A4)(TWN)	1-1	X/X	9	15	
	A2327935	Operation Panel Ass'y (TWN)			17	*	
A2327637		Sheet – Image Editing (A4)(TWN)	1-1	X/X	17	1	
	A2327936	Sheet – Image Editing (TWN)					
	A2326284	Grounding Plate – Lans Block Cover (TWN)	0-1		19	*23	3
	A2326285	Tapping Screw – M3X6 (TWN)	0-1		19	*24	3
AZ230077		Power Supply Unit – 115V	1-1	X/X	61	14	
	AZ230078	Power Supply Unit - TWN					
	16070627	Ferrite Core – SFC-10 (TWN)	0-1		61	*115	4
A2325402		DC Harness – Front Upper	1-1	X/X	63	3	
	A2305402	DC Harness – Front Upper (TWN-A230/A231)					
	A2308609	System Instruction Guide (TWN)	0-1		87	*18	
	A2318609	Copy Instruction Guide (TWN)	0-1		87	*19	
	A2328609	Copy Quick Guide (TWN)	0-1		87	*20	

* New Index #

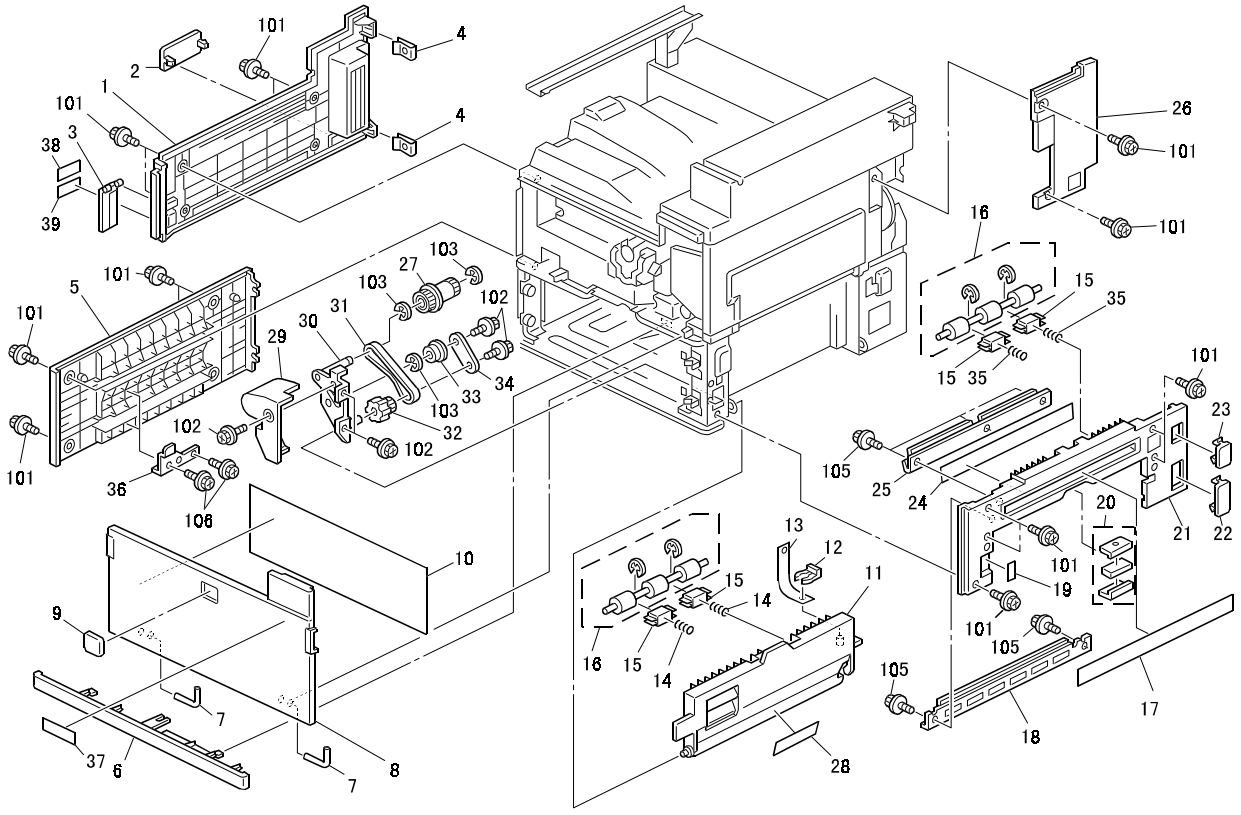

Fig. 1

Model: NAD 30S/30/40	Date: 31-May-98	No: 1

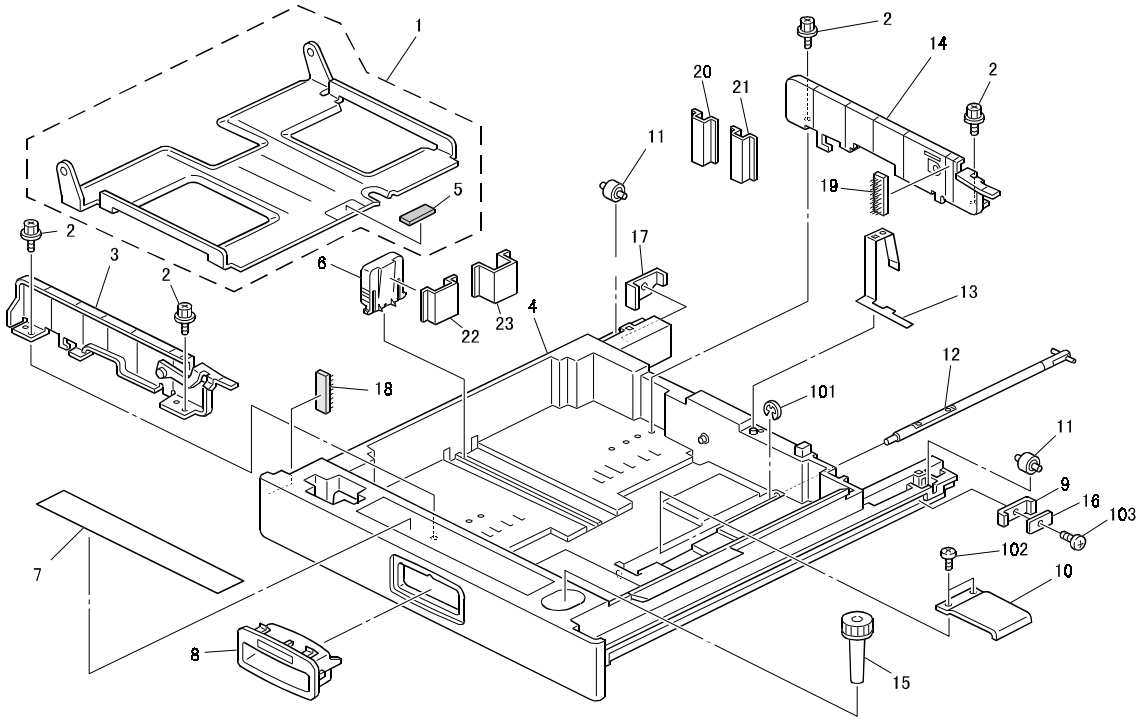

Fig. 2

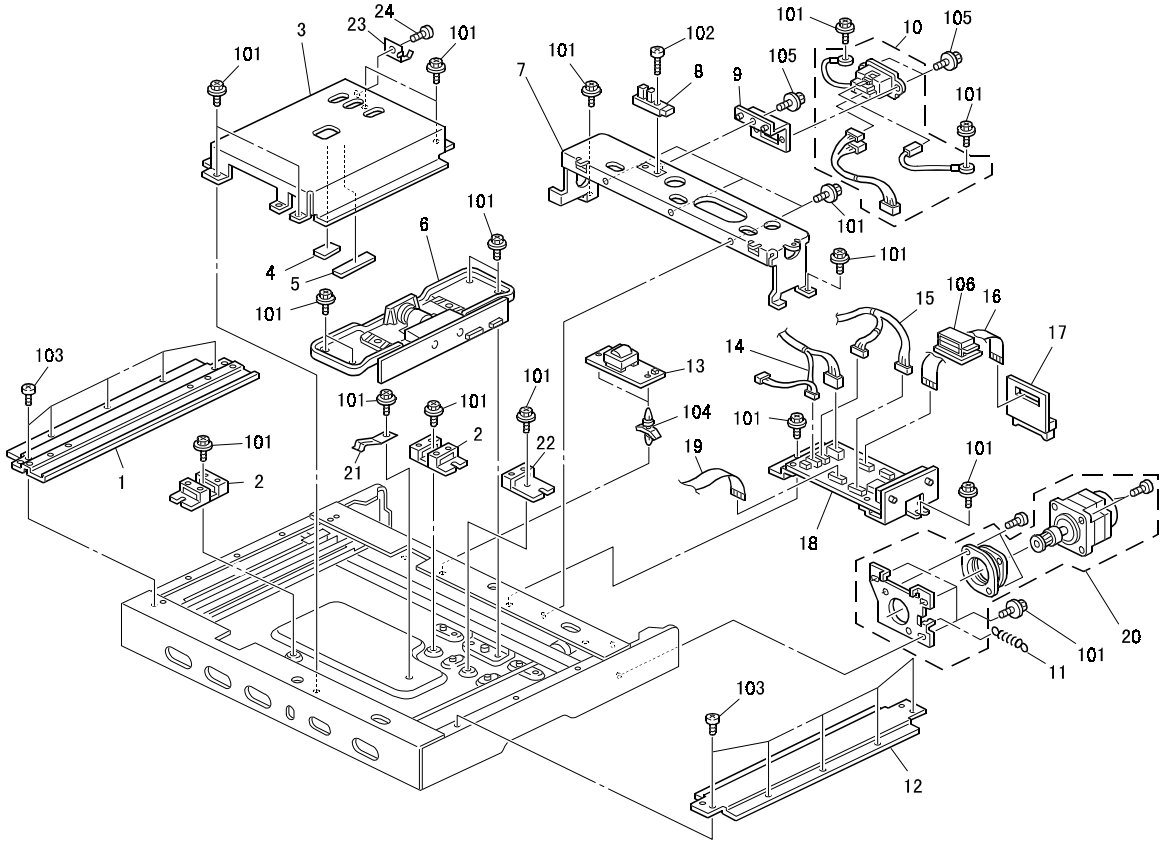

Fig. 3

Model: NAD 30S/30/40	Date: 31-May-98	No: 1

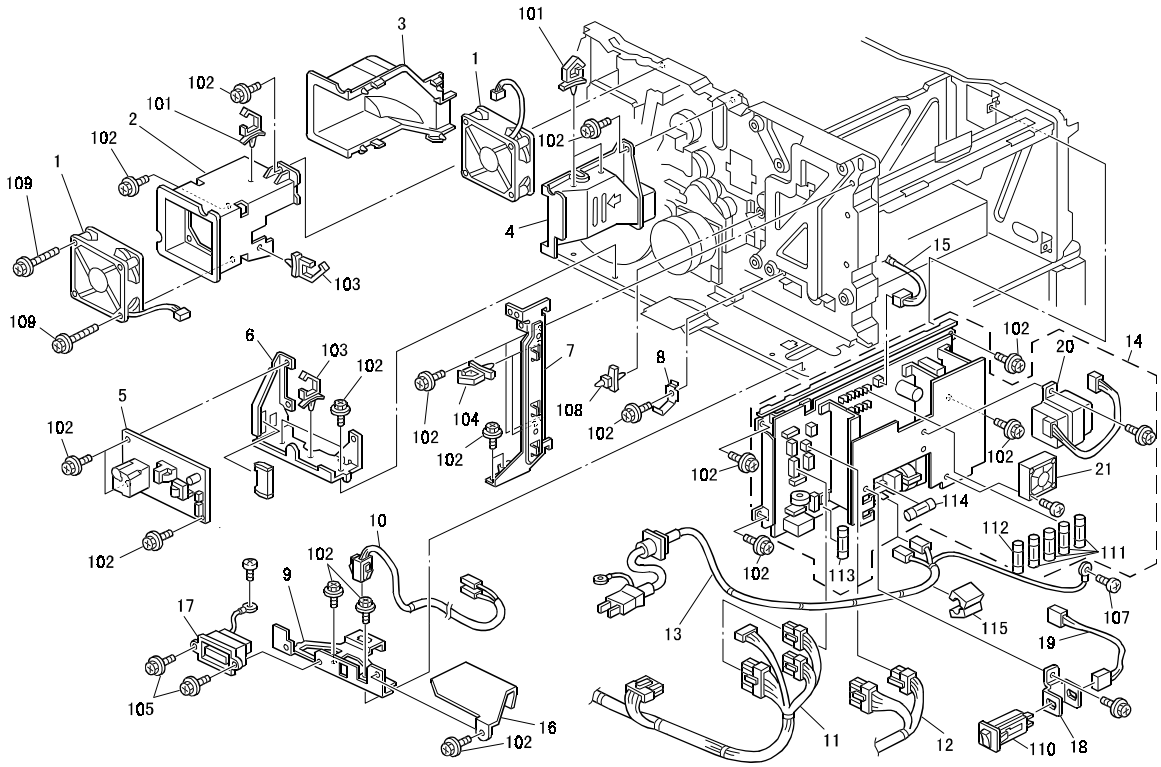

Fig. 4

			RAI PRODUCTION	
MODEL NAME	V/Hz	DESTINATION	CODE	SERIAL NUMBER
Gestetner 3235s Savin 9935D	115/60	USA, Canada,	A230-10	
Ricoh Aficio340	115/60	USA, Canada	A230-17	
Ricoh Aficio340	115/60	Taiwan	A230-19	
Gestetner 3235S Nashuatec D435S Rex-Rotaly 2835S	220, 230, 240/50	Europe, etc.	A230-22	
Infotec 4351MF	220, 230, 240/50	Europe, Australia	A230-26	
Ricoh Aficio340	220, 230, 240/50	Europe, etc.	A230-27	
Ricoh Aficio340	220,230, 240/50,60	Asia	A230-39	
Lanier 5135	110/60	USA, Canada	A230-55	
Lanier 5134	220,230 240/50	Europe, Australia	A230-65	
Ricoh Aficio340	220,230 240/50	China	A230-69	
Gestetner 3235 Savin 9935DP	115/60	USA, Canada,	A231-10	
Ricoh Aficio340	115/60	USA, Canada	A231-17	
Ricoh Aficio340	110/60	Taiwan	A231-19	
Gestetner 3235 nashuatec D435 Rex Rotaly 2835	220,230, 240/50	Europe, etc.	A231-22	
Infotec 4352 MF	220,230, 240/50	Europe, Australia	A231-26	
Ricoh Aficio340	220,230, 240/50	Europe, etc.	A231-27	
Ricoh Aficio340	220,230 240/50,60	Asia	A231-39	
Lanier 5135	115/60	USA, Canada	A231-55	
Lanier 5135	220,230 240/50	Europe, Australia	A231-65	
Ricoh Aficio340	220,230 240/50	China	A231-69	

			RAI PRODUCTION	
MODEL NAME	V/Hz	DESTINATION	CODE	SERIAL NUMBER
Gestetner 3245 Savin 9945DP	115/60	USA, Canada,	A232-10	
Ricoh Aficio340	115/60	USA, Canada	A232-17	
Ricoh Aficio340	110/60	Taiwan	A232-19	
Gestetner 3245 Nashuatec D445 Rex-Rotaly 2845	220, 230, 240/50	Europe, etc.	A232-22	
Infotec 4451 MF	220, 230, 240/50	Europe, Australia	A232-26	
Ricoh Aficio340	220, 230, 240/50	Europe, etc.	A232-27	
Ricoh Aficio340	220,230, 240/50,60	Asia	A232-39	
Lanier 5135	115/60	USA, Canada	A232-55	
Lanier 5135	220,230 240/50	Europe, Australia	A232-65	
Ricoh FT	220,230 240/50	China	A232-69	

Model: NAD 30S/30/40	Date: 15-Jun-98	No: 2
Modified Article: Drive, Electrical, HDD, Key Counter	Prepared by: S.Tomoe	
From: Technical Service Department		

Reason for Modification:
- ☒ Parts catalog correction
- ☐ Vendor change
- ☐ To meet standards ( )
- ☐ To facilitate assembly
- ☐ To improve reliability
- ☐ Part standardization
- ☐ Other

The following part number should be deleted and the index number in the illustration should be corrected from 36 to 22.

Old part number	New part number	Description	Qty	Int	Page	Index	Note
A2325522		Harness – Interface Switch	1 - 0		59	36	1

Note 1: Refer to the attached fig.1.

The following should be corrected.

Old part number	New part number	Description	Qty	Int	Page	Index	Note
A6931292		Rear Cover - CSS	1 – 0		13	19	
AA080231	AA080246	Bushing – Bias Roller	1 – 1		41	26	
	A2323066	Decal – Development Unit	0 – 1		45	*31	2
A2325441		Harness – LDDR	1 – 1		61	15	
	A2325522	Harness – Interlock Switch					
11070979	11070879	Fuse – 8A 250V	1 – 1		61	114	
A6915871	A6915876	1.6G Byte HDD	1 – 1		69	1	
A6915892	A6915891	HDD Bracket	1 – 1		69	3	3

Note 2: Refer to the attached fig.2. ∗New Index #

Note 3: Refer to the attached fig.3.

The following part should be added (Lanier version only).

Old part number	New part number	Description	Qty	Int	Page	Index	Note
	A6745402	Key Counter Harness (LAN)	0 - 1		73	1	

Model: NAD 30S/30/40	Date: 15-Jun-98	No: 2

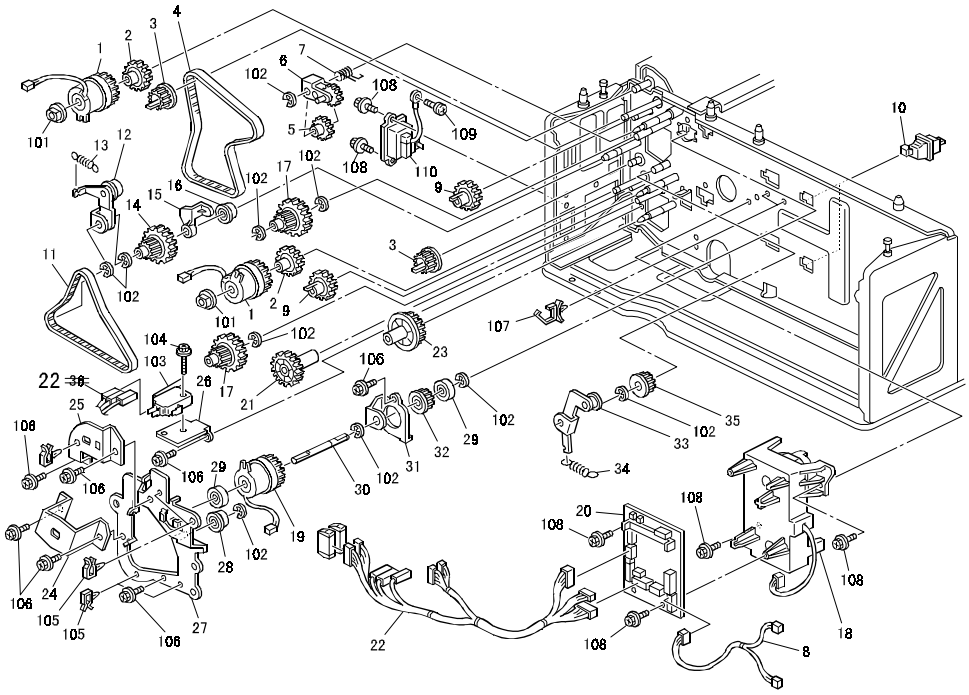

Fig. 1

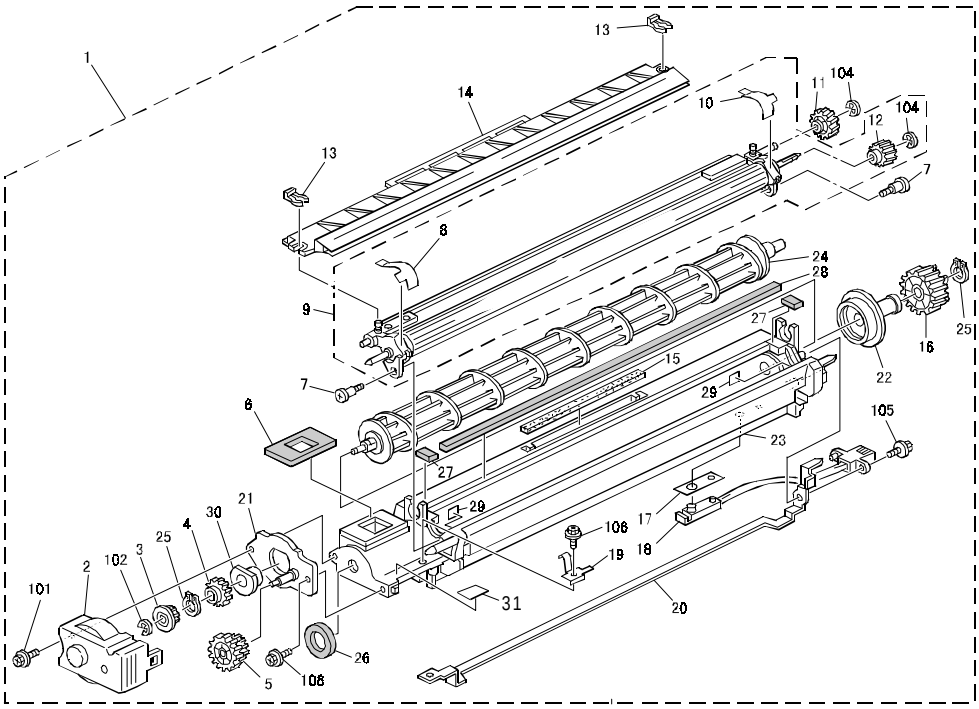

Fig. 2

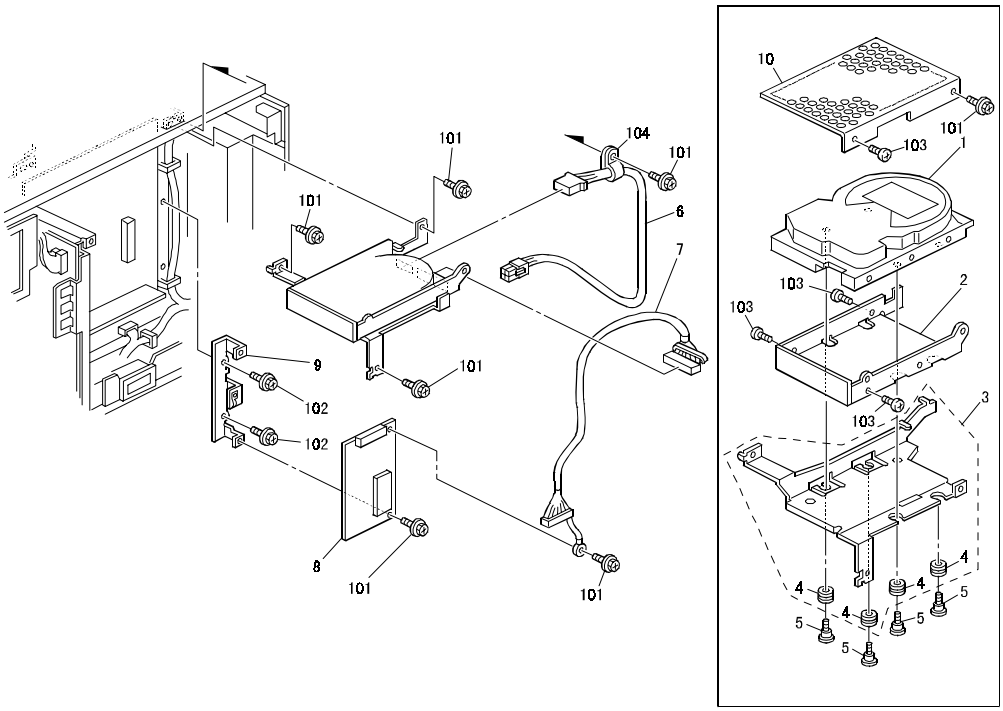
101
104
101
101
6
7
9
101
102
102
8
101
101
10
101
103
1
103
2
103
3
103
4
4
4
4
5
5
5
5

Fig. 3

			RAI PRODUCTION	
MODEL NAME	V/Hz	DESTINATION	CODE	SERIAL NUMBER
Gestetner 3235s Savin 9935D	115/60	USA, Canada,	A230-10	
Ricoh Aficio340	115/60	USA, Canada	A230-17	
Ricoh Aficio340	115/60	Taiwan	A230-19	
Gestetner 3235S Nashuatec D435S Rex-Rotaly 2835S	220, 230, 240/50	Europe, etc.	A230-22	
Infotec 4351MF	220, 230, 240/50	Europe, Australia	A230-26	
Ricoh Aficio340	220, 230, 240/50	Europe, etc.	A230-27	
Ricoh Aficio340	220,230, 240/50,60	Asia	A230-39	
Lanier 5135	110/60	USA, Canada	A230-55	
Lanier 5134	220,230 240/50	Europe, Australia	A230-65	
Ricoh Aficio340	220,230 240/50	China	A230-69	
Gestetner 3235 Savin 9935DP	115/60	USA, Canada,	A231-10	
Ricoh Aficio350	115/60	USA, Canada	A231-17	
Ricoh Aficio350	110/60	Taiwan	A231-19	
Gestetner 3235 nashuatec D435 Rex Rotaly 2835	220,230, 240/50	Europe, etc.	A231-22	
Infotec 4352 MF	220,230, 240/50	Europe, Australia	A231-26	
Ricoh Aficio350	220,230, 240/50	Europe, etc.	A231-27	
Ricoh Aficio350	220,230 240/50,60	Asia	A231-39	
Lanier 5235	115/60	USA, Canada	A231-55	
Lanier 5235	220,230 240/50	Europe, Australia	A231-65	
Ricoh Aficio350	220,230 240/50	China	A231-69	

Model: NAD 30S/30/40	Date: 15-Jun-98	No: 2

			RAI PRODUCTION	
MODEL NAME	V/Hz	DESTINATION	CODE	SERIAL NUMBER
Gestetner 3245 Savin 9945DP	115/60	USA, Canada,	A232-10	
Ricoh Aficio450	115/60	USA, Canada	A232-17	
Ricoh Aficio450	110/60	Taiwan	A232-19	
Gestetner 3245 Nashuatec D445 Rex-Rotaly 2845	220, 230, 240/50	Europe, etc.	A232-22	
Infotec 4451 MF	220, 230, 240/50	Europe, Australia	A232-26	
Ricoh Aficio450	220, 230, 240/50	Europe, etc.	A232-27	
Ricoh Aficio450	220,230, 240/50,60	Asia	A232-39	
Lanier 5245	115/60	USA, Canada	A232-55	
Lanier 5245	220,230 240/50	Europe, Australia	A232-65	
Ricoh Aficio450	220,230 240/50	China	A232-69	

Model: NAD 30S/30/40	Date: 15-Jun-98	No: 2

			JAPAN PRODUCTION	
MODEL NAME	V/Hz	DESTINATION	CODE	SERIAL NUMBER
Gestetner 3235S Savin 9935D	115/60	USA, Canada,	A230-30	
Ricoh Aficio340	115/60	USA, Canada	A230-37	
Gestetner 3235 Savin 9935DP	115/60	USA, Canada,	A231-30	
Ricoh Aficio350	115/60	USA, Canada	A231-37	
Gestetner 3245 Savin 9945DP	115/60	USA, Canada,	A232-37	
Ricoh Aficio450	115/60	USA, Canada	A232-30	

RICOH **M**odification **B**ulletin

Model: NAD 30S/30/40	Date: 31-Jul-98	No: 3
Modified Article: Exterior 2	Prepared by: S.Tomoe	
From: QAC Field Information Dept.		

Reason for Modification:

☒ Parts catalog correction ☐ Vendor change ☐ To meet standards ( )
☐ To facilitate assembly ☐ To improve reliability
☐ Part standardization ☐ Other

The following should be corrected. Please correct your parts catalog.

1. The following part number should be corrected.

Old part number	New part number	Description	Qty	Int	Page	Index	Note
A2321261		Front Cover (RIC/INF/LAN)	1		11	8	1
	A2307228	Front Cover (RIC-A230)	1	X/O	11	8	1
	A2317228	Front Cover (RIC-A231)	1	X/O	11	8	1
	A2327228	Front Cover (RIC-A232)	1	X/O	11	8	1
	A2307828	Front Cover (INF-A230)	1	X/O	11	8	1
	A2317828	Front Cover (INF-A231)	1	X/O	11	8	1
	A2327828	Front Covre (INF-A232)	1	X/O	11	8	1
	A2317617	Front Cover (RIC-A231-Gov)	1	X/O	11	8	1
	A2327617	Front Cover (RIC-A232-Gov)	1	X/O	11	8	1
	A2327428	Front Cover (GES -230V)	1		11	8	1

2. The following description should be corrected.

Part number	Old description	New description	Page	Index	Note
A2327021	Front Cover (GES/SVN)	Front Cover (GES/SAV/LAN)	11	8	1

3. The following parts should be added.

New part number	Description	Qty	Int	Page	Index	Note
A2307071	Model Name Plate (GES-A230)	1		11	37	
A2317071	Model Name Plate (GES-A231)	1		11	37	
A2317073	Model Name Plate (GES-A231-Gov)	1		11	37	
A2327073	Model Name Plate (GES-A232-Gov)	1		11	37	
A2307571	Model Name Plate (NST-A230)	1		11	37	
A2317571	Model Name Plate (NST-A231)	1		11	37	
A2307572	Model Name Plate (REX-A230)	1		11	37	
A2317572	Model Name Plate (REX-A231)	1		11	37	
A2307072	Model Name Plate (SAV-A230)	1		11	37	
A2317072	Model Name Plate (SAV-A231)	1		11	37	
A2306371	Model Name Plate (LAN-A230)	1		11	37	
A2316371	Model Name Plate (LAN-A231)	1		11	37	
A2326371	Model Name Plate (LAN-A232)			11	37	

Note1

The relationship between the part number of the front cover and the brand is as follows.

	A230 (NAD30S)	**A231 (NAD30)**	**A232 (NAD40)**
RICOH (Except –37)	A2307228	A2317228	A2327228
RICOH (-37)	---	A2317617	A2327617
NRG (230V machine)	A2327428	←	←
NRG (115V machine)	A2327021	←	←
Infotec	A2307828	A2317828	A2327828
Lanier	A2327021	←	←

			RAI PRODUCTION	
MODEL NAME	V/Hz	DESTINATION	CODE	SERIAL NUMBER
Gestetner 3235s Savin 9935D	115/60	USA, Canada,	A230-10	
Ricoh Aficio340	115/60	USA, Canada	A230-17	
Ricoh Aficio340	115/60	Taiwan	A230-19	
Gestetner 3235S Nashuatec D435S Rex-Rotaly 2835S	220, 230, 240/50	Europe, etc.	A230-22	
Infotec 4351MF	220, 230, 240/50	Europe, Australia	A230-26	
Ricoh Aficio340	220, 230, 240/50	Europe, etc.	A230-27	
Ricoh Aficio340	220,230, 240/50,60	Asia	A230-39	
Lanier 5135	110/60	USA, Canada	A230-55	
Lanier 5134	220,230 240/50	Europe, Australia	A230-65	
Ricoh Aficio340	220,230 240/50	China	A230-69	
Gestetner 3235 Savin 9935DP	115/60	USA, Canada,	A231-10	
Ricoh Aficio350	115/60	USA, Canada	A231-17	
Ricoh Aficio350	110/60	Taiwan	A231-19	
Gestetner 3235 nashuatec D435 Rex Rotaly 2835	220,230, 240/50	Europe, etc.	A231-22	
Infotec 4352 MF	220,230, 240/50	Europe, Australia	A231-26	
Ricoh Aficio350	220,230, 240/50	Europe, etc.	A231-27	
Ricoh Aficio350	220,230 240/50,60	Asia	A231-39	
Lanier 5235	115/60	USA, Canada	A231-55	
Lanier 5235	220,230 240/50	Europe, Australia	A231-65	
Ricoh Aficio350	220,230 240/50	China	A231-69	

Model: NAD 30S/30/40	Date: 31-Aug-98	No: 4
Modified Article: LD Unit Assembly	Prepared by: M.Mimura	
From: QAC Field Information Dept.		

Reason for Modification:

☐ Parts catalog correction ☐ Vendor change ☐ To meet standards ( )
☐ To facilitate assembly ☐ To improve reliability
☐ Part standardization ☒ Other

As per field request, the entire LD unit assembly has been set up as a service part.

New part number	Description	Qty	Destination Code	Page	Index
A2327301	LD Unit Ass'y (A232) - NA	1	A232-10,-15,-17,-19,-55	23	*
A2337301	LD Unit Ass'y (A230/A231) - NA	1	A230-10,-17,-19,-55 A231-10,-17,-19,-55	23	*
A2327303	LD Unit Ass'y (A232) - EU	1	A232-22,-26,-27,-29,-39,-52, -56,-57,-65,-69	23	*
A2337303	LD Unit Ass'y (A230/A231) - EU	1	A230-22,-26,-27,-29,-39,-52, -56,-57,-65,-69 A231-22,-26,-27,-29,-39,-52,-56 -57,-65,-69	23	*
A2327307	LD Unit Ass'y (A232) – GSA	1	A232-30,-37	23	*
A2337307	LD Unit Ass'y (A230/A231) - GSA	1	A230-30,-37 A231-30,-37	23	*

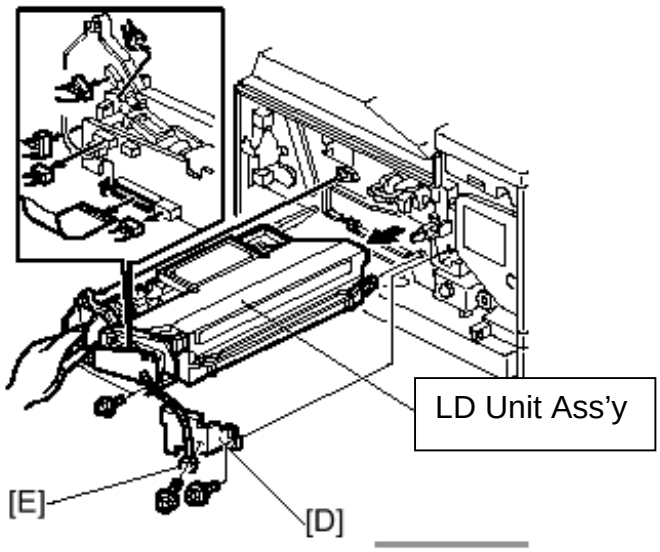

			RAI PRODUCTION	
MODEL NAME	V/Hz	DESTINATION	CODE	SERIAL NUMBER
Gestetner 3235s Savin 9935D	115/60	USA, Canada,	A230-10	
Ricoh Aficio340	115/60	USA, Canada	A230-17	
Ricoh Aficio340	115/60	Taiwan	A230-19	
Gestetner 3235S nashuatec D435S Rex-Rotary 2835S	220/50	Europe, etc.	A230-22	
Infotec 4351MF	220/50	Europe, Australia	A230-26	
Ricoh Aficio340	220/50	Europe, etc.	A230-27	
Ricoh Aficio340	220/50,60	Asia	A230-39	
Lanier 5135	110/60	USA, Canada	A230-55	
Lanier 5134	220/50	Europe, Australia	A230-65	
Ricoh Aficio340	220/50	China	A230-69	
Gestetner 3235 Savin 9935DP	115/60	USA, Canada,	A231-10	
Ricoh Aficio350	115/60	USA, Canada	A231-17	
Ricoh Aficio350	110/60	Taiwan	A231-19	
Gestetner 3235 nashuatec D435 Rex Rotary 2835	220/50	Europe, etc.	A231-22	
Infotec 4352 MF	220/50	Europe, Australia	A231-26	
Ricoh Aficio350	220/50	Europe, etc.	A231-27	
Ricoh Aficio350	220/50,60	Asia	A231-39	
Lanier 5235	115/60	USA, Canada	A231-55	
Lanier 5235	220/50	Europe, Australia	A231-65	
Ricoh Aficio350	220/50	China	A231-69	
Gestetner 3245 Savin 9945DP	115/60	USA, Canada,	A232-10	
Ricoh Aficio450	115/60	USA, Canada	A232-17	
Ricoh Aficio450	110/60	Taiwan	A232-19	
Gestetner 3245 nashuatec D445 Rex-Rotary 2845	220/50	Europe, etc.	A232-22	
Infotec 4451 MF	220/50	Europe, Australia	A232-26	
Ricoh Aficio450	220/50	Europe, etc.	A232-27	
Ricoh Aficio450	220/50,60	Asia	A232-39	
Lanier 5245	115/60	USA, Canada	A232-55	
Lanier 5245	220/50	Europe, Australia	A232-65	
Ricoh Aficio450	220/50	China	A232-69	

Model: NAD 30S/30/40	Date: 31-Aug-98	No: 4

			JAPAN PRODUCTION	
MODEL NAME	V/Hz	DESTINATION	CODE	SERIAL NUMBER
Gestetner 3235S Savin 9935D	115/60	USA, Canada,	A230-30	
Ricoh Aficio345	115/60	USA, Canada	A230-37	
Savin 2035DP	115/60	USA	A231-30	
Ricoh Aficio355	115/60	USA	A231-37	
Savin 2045DP	115/60	USA	A232-37	
Ricoh Aficio455	115/60	USA	A232-30	

Reissued: 15-Feb-99

Model: NAD 30S/30/40	Date: 31-Jan-99	No.: 5a

MB Correction

The items in bold italics have been corrected or added.

Modified Article: Total Counter			Prepared by: E. Fukuyama
From: GTSS Field Information Dept			
Reason for Modification:	☐ Parts catalog correction ☐ To facilitate assembly ☐ Part standardization	☐ Vendor change ☐ To improve reliability ☒ Other	☐ To meet standards ( )

The following part has been registered as a service part.

Please add this to your parts catalog.

Part number	Description	Qty	Page	Index
AX310035	Total Counter	1	13	36

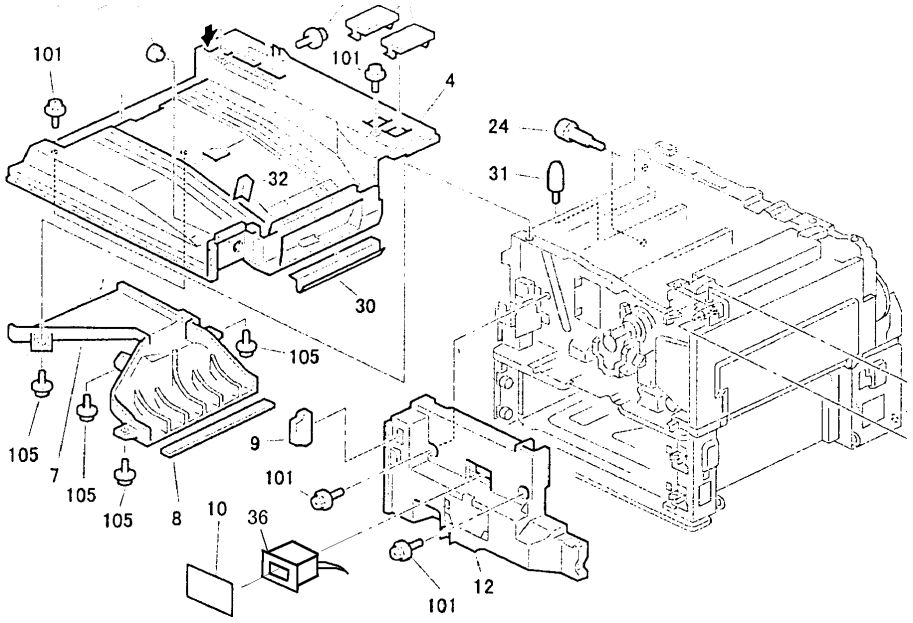

Model: NAD 30S/30/40	Date: 28-Feb-99	No.: 6

Modified Article: Development Unit			Prepared by: E. Fukuyama
From: GTSS Field Information Dept			
Reason for Modification:	☐ Parts catalog correction ☐ To facilitate assembly ☐ Part standardization	☐ Vendor change ☒ To improve reliability ☐ Other	☐ To meet standards ( )

Symptom

Developer leakage at the front of the development unit.

Cause

When a large amount of copies are made, the temperature in the paddle bushing area increases and this heat causes deformation of the V-ring designed to act as a developer shield. This results in developer leakage at the front of the development unit.

Countermeasure

To increase the tolerance to heat, the material of the Flange - Side Plate has been changed from plastic to aluminum to prevent V-ring damage.

Old part number	New part number	Description	Qty	Int	Page	Index	Note
A2327260	A2327660	Development Unit	1	X/O	45	1	
A2323091	A2323096	Flange – Side Plate	1	X/O	45	21	

			RAI PRODUCTION	
MODEL NAME	V/Hz	DESTINATION	CODE	SERIAL NUMBER
Gestetner 3235s Savin 9935D	115/60	USA, Canada,	A230-10	1B88910001
Ricoh Aficio340	115/60	USA, Canada	A230-17	A7688910001
Ricoh Aficio340	115/60	Taiwan	A230-19	A768910061
Gestetner 3235S nashuatec D435S Rex-Rotary 2835S	220/50	Europe, etc.	A230-22	AQ18910001
Infotec 4351MF	220/50	Europe, Australia	A230-26	3Q19180001
Ricoh Aficio340	220/50	Europe, etc.	A230-27	
Ricoh Aficio340	220/50,60	Asia	A230-39	A7688910031
Lanier 5135	110/60	USA, Canada	A230-55	
Lanier 5134	220/50	Europe, Australia	A230-65	
Ricoh Aficio340	220/50	China	A230-69	
Gestetner 3235 Savin 9935DP	115/60	USA, Canada,	A231-10	1B98910001
Ricoh Aficio350	115/60	USA, Canada	A231-17	A7698910265
Ricoh Aficio350	110/60	Taiwan	A231-19	
Gestetner 3235 nashuatec D435 Rex Rotary 2835	220/50	Europe, etc.	A231-22	AQ39810001
Infotec 4352 MF	220/50	Europe, Australia	A231-26	3Q29180001
Ricoh Aficio350	220/50	Europe, etc.	A231-27	A7698910047
Ricoh Aficio350	220/50,60	Asia	A231-39	A7699811140
Lanier 5235	115/60	USA, Canada	A231-55	L5238911221
Lanier 5235	220/50	Europe, Australia	A231-65	L5238911071
Ricoh Aficio350	220/50	China	A231-69	
Gestetner 3245 Savin 9945DP	115/60	USA, Canada,	A232-10	2B18910001
Ricoh Aficio450	115/60	USA, Canada	A232-17	A7708910194
Ricoh Aficio450	110/60	Taiwan	A232-19	A7709811236
Gestetner 3245 nashuatec D445 Rex-Rotary 2845	220/50	Europe, etc.	A232-22	AQ58910001
Infotec 4451 MF	220/50	Europe, Australia	A232-26	3Q39180001
Ricoh Aficio450	220/50	Europe, etc.	A232-27	A7708910001
Ricoh Aficio450	220/50,60	Asia	A232-39	A7708910620
Lanier 5245	115/60	USA, Canada	A232-55	L5248910971
Lanier 5245	220/50	Europe, Australia	A232-65	L5248911181
Ricoh Aficio450	220/50	China	A232-69	

			RPL PRODUCTION	
MODEL NAME	V/Hz	DESTINATION	CODE	SERIAL NUMBER
Gestetner 3235S nashuatec D435S Rex-Rotary 2835S	220/50	Europe, etc.	A230-52	AQ1929****
Infotec 4351MF	220/50	Europe, Australia	A230-56	3Q13280001
Ricoh Aficio340	220/50	Europe, etc.	A230-57	A768831****
Gestetner 3235 nashuatec D435 Rex Rotary 2835	220/50	Europe, etc.	A231-52	AQ38320001
Infotec 4352 MF	220/50	Europe, Australia	A231-56	3Q23280001
Ricoh Aficio350	220/50	Europe, etc.	A231-57	A7698320001
Gestetner 3245 nashuatec D445 Rex-Rotary 2845	220/50	Europe, etc.	A232-52	AQ58210001
Infotec 4451 MF	220/50	Europe, Australia	A232-56	3Q33280001
Ricoh Aficio450	220/50	Europe, etc.	A232-57	A7709210001

			JAPAN PRODUCTION	
MODEL NAME	V/Hz	DESTINATION	CODE	SERIAL NUMBER
Ricoh Aficio345	115/60	USA, Canada	A230-37	
Savin 2035DP	115/60	USA	A231-30	1B98080001
Ricoh Aficio355	115/60	USA	A231-37	A7698080001
Ricoh Aficio455	115/60	USA	A232-30	2B18080001
Savin 2045DP	115/60	USA	A232-37	A7708080001

RICOH **M**odification **B**ulletin **PAGE: 1/1**

Reissued: 15-May-99

Model: NAD30S/30/40	Date: 15-Apr-99	No.: MA230007a

MB Correction

The items in bold italics have been corrected or added.

Modified Article: Parts Catalog Correction			Prepared by: S. Hizen
From: Technical Service Dept., GTS Division			
Reason for Modification:	☒ Parts catalog correction ☐ To facilitate assembly ☐ Part standardization	☐ Vendor change ☐ To improve reliability ☐ Other	☐ To meet standards ( )

The V-Seal rings at both sides of the paddle roller are missing from the parts catalog.
Please add the part number #AA15-2283: Ring – M12 to your parts catalog.

Part number	Description	Index	Page	Q'ty
AA15-2283	Ring – M12	***32***	45	2

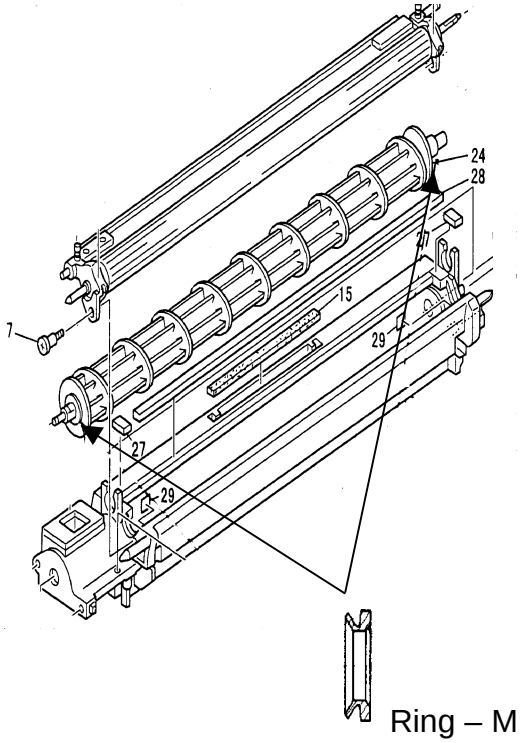

Ring – M12
P/N AA15 - 2283

RICOH

Modification Bulletin

Model: NAD 30S/30/40	Date: 15-Apr-99	No.: MA230008

Modified Article: Components of the IOB Board			Prepared by: S. Hizen
From: Technical Service Dept., GTS Division			
Reason for Modification:	☐ Parts catalog correction ☒ To facilitate assembly ☐ Part standardization	☐ Vendor change ☐ To improve reliability ☐ Other	☐ To meet standards ( )

To facilitate assembly, the dip switch and the oscillator have been changed as follows:

Old part number	New part number	Description	Qty	Int	Page	Index	Note
1204-1537	1204-1543	Dip Switch	1	O/O	79	122	
1503-0261	1503-0865	Oscillator – 9.8304MHZ	1	O/O	79	142	

RICOH

Modification Bulletin

Model: NAD 30S/30/40	Date: 15-Apr-99	No.: MA230009

Modified Article: Front Cover - Scanner Harness			Prepared by: S. Hizen
From: Technical Service Dept., GTS Division			
Reason for Modification:	☐ Parts catalog correction ☐ To facilitate assembly ☒ Part standardization	☐ Vendor change ☐ To improve reliability ☐ Other	☐ To meet standards ( )

Old part number	New part number	Description	Qty	Int	Page	Index	Note
A232-1342	A284-1342	Front Cover – Scanner Harness	1	O/O	13	21	

To standardize the part with other models, this part has been changed from A232-1342 to A284-1342 with the interchangeability O/O.

RICOH

Modification Bulletin

Model: NAD 30S/30/40	Date: 15-Apr-99	No.: MA230010

Modified Article: Hard Disk Drive			Prepared by: M. Kitajima
From: Technical Service Dept., GTS Division			
Reason for Modification:	☐ Parts catalog correction ☐ To facilitate assembly ☐ Part standardization	☒ Vendor change ☐ To improve reliability ☐ Other	☐ To meet standards ( )

Old part number	New part number	Description	Q'ty	Int	Page	Index	Note
A6915871	A6915877	Hard Disk Drive	1-1	O/O	69	1	

The hard disk manufacturer has been changed due to discontinuation of the hard disk drive (P/N A6915871). The manufacturer has been changed from Western Digital to Quantum.

Model: NAD 30S/30/40	Date: 15-Apr-99	No.: MA230011

Modified Article: Thermistor			Prepared by: S. Hizen
From: Technical Service Dept., GTS Division			
Reason for Modification:	☐ Parts catalog correction ☐ To facilitate assembly ☐ Part standardization	☐ Vendor change ☐ To improve reliability ☒ Other	☐ To meet standards ( )

Old part number	New part number	Description	Qty	Int	Page	Index	Note
AW10-0042	AW10-0051	Thermistor	1/1	X/O	47	11	*

To prevent the hot roller from being scratched by the thermistor, the thickness of the Teflon covering on the thermistor has been changed from 40μ to 80μ. (Note: See RTB #21)

Note:

	Old	New
Part Number	AW10-0042	AW10-0051
Teflon Thickness	40μ	80μ

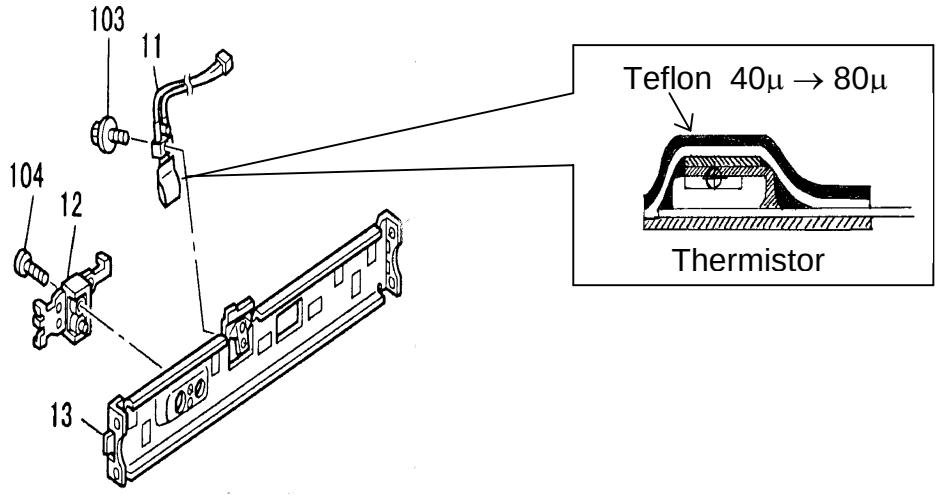

			RAI PRODUCTION	
MODEL NAME	V/Hz	DESTINATION	CODE	SERIAL NUMBER
Gestetner 3235s Savin 9935D	115/60	USA, Canada,	A230-10	1B89810001
Ricoh Aficio340	115/60	USA, Canada	A230-17	A7688920001
Ricoh Aficio340	115/60	Taiwan	A230-19	A7689810061
Gestetner 3235S nashuatec D435S Rex-Rotaly 2835S	220/50	Europe, etc.	A230-22	AQ18920003
Infotec 4351MF	220/50	Europe, Australia	A230-26	3Q19280025
Ricoh Aficio340	220/50	Europe, etc.	A230-27	
Ricoh Aficio340	220/50,60	Asia	A230-39	A7688920021
Lanier 5135	110/60	USA, Canada	A230-55	
Lanier 5134	220/50	Europe, Australia	A230-65	
Ricoh Aficio340	220/50	China	A230-69	
Gestetner 3235 Savin 9935DP	115/60	USA, Canada,	A231-10	1B98920001
Ricoh Aficio350	115/60	USA, Canada	A231-17	A7698920133
Ricoh Aficio350	110/60	Taiwan	A231-19	
Gestetner 3235 nashuatec D435 Rex Rotaly 2835	220/50	Europe, etc.	A231-22	AQ39810001
Infotec 4352 MF	220/50	Europe, Australia	A231-26	3Q29280019
Ricoh Aficio350	220/50	Europe, etc.	A231-27	A7698920118
Ricoh Aficio350	220/50,60	Asia	A231-39	A7699811140
Lanier 5235	115/60	USA, Canada	A231-55	L5238921381
Lanier 5235	220/50	Europe, Australia	A231-65	L5238921641
Ricoh Aficio350	220/50	China	A231-69	
Gestetner 3245 Savin 9945DP	115/60	USA, Canada,	A232-10	2B18920001
Ricoh Aficio450	115/60	USA, Canada	A232-17	A7708920378
Ricoh Aficio450	110/60	Taiwan	A232-19	A7708921102
Gestetner 3245 nashuatec D445 Rex-Rotaly 2845	220/50	Europe, etc.	A232-22	AQ58920015
Infotec 4451 MF	220/50	Europe, Australia	A232-26	3Q39280048
Ricoh Aficio450	220/50	Europe, etc.	A232-27	A7708920378
Ricoh Aficio450	220/50,60	Asia	A232-39	A7708921103
Lanier 5245	115/60	USA, Canada	A232-55	L5248921523
Lanier 5245	220/50	Europe, Australia	A232-65	L5248921412
Ricoh Aficio450	220/50	China	A232-69	

			RPL PRODUCTION	
MODEL NAME	V/Hz	DESTINATION	CODE	SERIAL NUMBER
Gestetner 3235S nashuatec D435S Rex-Rotary 2835S	220/50	Europe, etc.	A230-52	
Infotec 4351MF	220/50	Europe, Australia	A230-56	
Ricoh Aficio340	220/50	Europe, etc.	A230-57	
Gestetner 3235 nashuatec D435 Rex Rotary 2835	220/50	Europe, etc.	A231-52	
Infotec 4352 MF	220/50	Europe, Australia	A231-56	
Ricoh Aficio350	220/50	Europe, etc.	A231-57	
Gestetner 3245 nashuatec D445 Rex-Rotary 2845	220/50	Europe, etc.	A232-52	
Infotec 4451 MF	220/50	Europe, Australia	A232-56	
Ricoh Aficio450	220/50	Europe, etc.	A232-57	

Model: NAD 30S/30/40	Date: 15-Apr-99	No.: MA230012

Modified Article: Jam Removal Decal			Prepared by: S. Hizen
From: Technical Service Dept., GTS Division			
Reason for Modification:	☐ Parts catalog correction ☐ To facilitate assembly ☐ Part standardization	☐ Vendor change ☐ To improve reliability ☒ Other	☐ To meet standards ( )

Old part number	New part number	Description	Qty	Int	Page	Index	Note
-	A2321386	Decal – Jam Removal	1	-	87	21	

To encourage the customer to open the right cover and check whether misfed paper is still in the fusing section or not, the Jam Removal Decal P/N: A232-1386 has been added as an accessory.
Please add this number to your parts catalog.

Note: The position of the decal should be on the right cover or on the duplex unit.

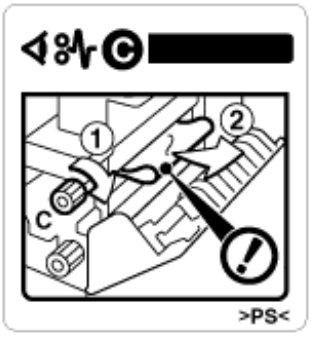

			RAI PRODUCTION	
MODEL NAME	V/Hz	DESTINATION	CODE	SERIAL NUMBER
Gestetner 3235s Savin 9935D	115/60	USA, Canada,	A230-10	1B89820001
Ricoh Aficio340	115/60	USA, Canada	A230-17	A7689820001
Ricoh Aficio340	115/60	Taiwan	A230-19	A7689820026
Gestetner 3235S nashuatec D435S Rex-Rotaly 2835S	220/50	Europe, etc.	A230-22	AQ19820001
Infotec 4351MF	220/50	Europe, Australia	A230-26	3Q18290001
Ricoh Aficio340	220/50	Europe, etc.	A230-27	---
Ricoh Aficio340	220/50,60	Asia	A230-39	A7689820081
Lanier 5135	110/60	USA, Canada	A230-55	---
Lanier 5134	220/50	Europe, Australia	A230-65	---
Ricoh Aficio340	220/50	China	A230-69	---
Gestetner 3235 Savin 9935DP	115/60	USA, Canada,	A231-10	1B99820001
Ricoh Aficio350	115/60	USA, Canada	A231-17	A7699820001
Ricoh Aficio350	110/60	Taiwan	A231-19	---
Gestetner 3235 nashuatec D435 Rex Rotaly 2835	220/50	Europe, etc.	A231-22	AQ39820001
Infotec 4352 MF	220/50	Europe, Australia	A231-26	3Q28290001
Ricoh Aficio350	220/50	Europe, etc.	A231-27	---
Ricoh Aficio350	220/50,60	Asia	A231-39	A7699821461
Lanier 5235	115/60	USA, Canada	A231-55	L5239822276
Lanier 5235	220/50	Europe, Australia	A231-65	L5239822216
Ricoh Aficio350	220/50	China	A231-69	---
Gestetner 3245 Savin 9945DP	115/60	USA, Canada,	A232-10	2B19820001
Ricoh Aficio450	115/60	USA, Canada	A232-17	A7709820001
Ricoh Aficio450	110/60	Taiwan	A232-19	A7709820954
Gestetner 3245 nashuatec D445 Rex-Rotaly 2845	220/50	Europe, etc.	A232-22	AQ59820001
Infotec 4451 MF	220/50	Europe, Australia	A232-26	3Q38290001
Ricoh Aficio450	220/50	Europe, etc.	A232-27	---
Ricoh Aficio450	220/50,60	Asia	A232-39	A7709820651
Lanier 5245	115/60	USA, Canada	A232-55	L5249822066
Lanier 5245	220/50	Europe, Australia	A232-65	L5249822266
Ricoh Aficio450	220/50	China	A232-69	---

			RPL PRODUCTION	
MODEL NAME	V/Hz	DESTINATION	CODE	SERIAL NUMBER
Gestetner 3235S nashuatec D435S Rex-Rotary 2835S	220/50	Europe, etc.	A230-52	
Infotec 4351MF	220/50	Europe, Australia	A230-56	
Ricoh Aficio340	220/50	Europe, etc.	A230-57	
Gestetner 3235 nashuatec D435 Rex Rotary 2835	220/50	Europe, etc.	A231-52	
Infotec 4352 MF	220/50	Europe, Australia	A231-56	
Ricoh Aficio350	220/50	Europe, etc.	A231-57	
Gestetner 3245 nashuatec D445 Rex-Rotary 2845	220/50	Europe, etc.	A232-52	
Infotec 4451 MF	220/50	Europe, Australia	A232-56	
Ricoh Aficio450	220/50	Europe, etc.	A232-57	

Model: NAD 30S/30/40	Date: 15-Apr-99	No.: MA230013

Modified Article: Development Unit			Prepared by: S. Hizen
From: Technical Service Dept., GTS Division			
Reason for Modification:	☐ Parts catalog correction ☐ To facilitate assembly ☐ Part standardization	☐ Vendor change ☐ To improve reliability ☒ Other	☐ To meet standards ( )

To prevent noise from the development unit, the surface of the retainer in the paddle roller has been Teflon coated. The part number of the development unit has been changed as shown in the table below.(Note: See RTB # 20)

Old part number	New part number	Description	Qty	Int	Page	Index	Note
A232-7660	A232-7460	Development Unit	1-1	X/O	45	1	*

Note:
Part number for the retainer in the paddle roller
Old: A232-7660 (not coated)
New: A232-7460 (Teflon coated)

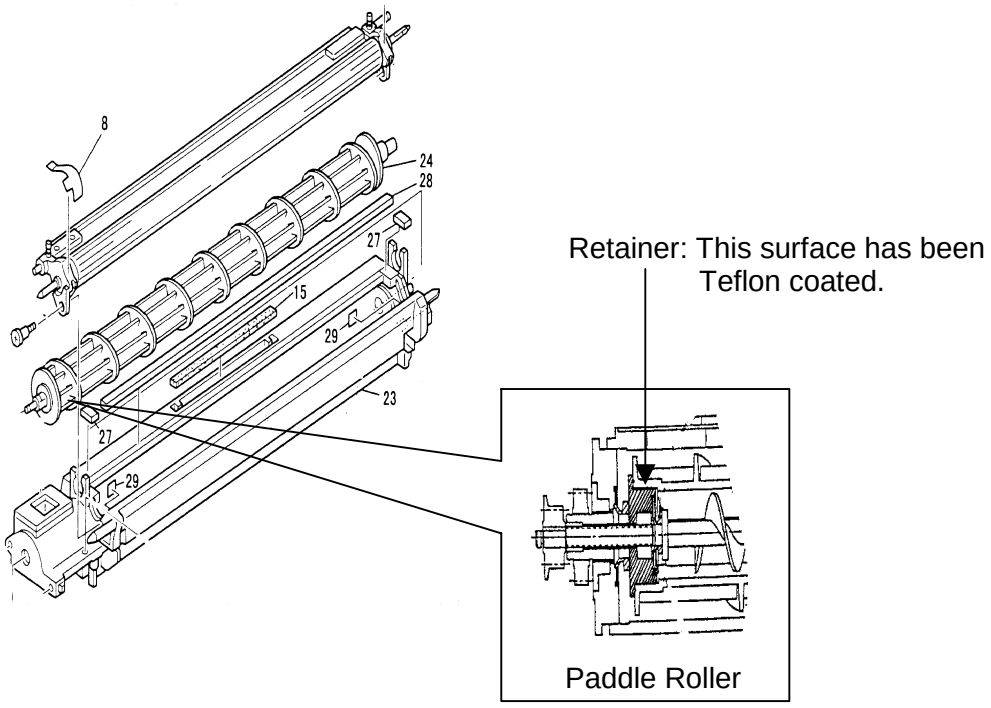

			RAI PRODUCTION	
MODEL NAME	V/Hz	DESTINATION	CODE	SERIAL NUMBER
Gestetner 3235s Savin 9935D	115/60	USA, Canada,	A230-10	1B89810001
Ricoh Aficio340	115/60	USA, Canada	A230-17	A7689810001
Ricoh Aficio340	115/60	Taiwan	A230-19	A7689810061
Gestetner 3235S nashuatec D435S Rex-Rotaly 2835S	220/50	Europe, etc.	A230-22	AQ18910001
Infotec 4351MF	220/50	Europe, Australia	A230-26	3Q19280001
Ricoh Aficio340	220/50	Europe, etc.	A230-27	A768982XXXX
Ricoh Aficio340	220/50,60	Asia	A230-39	A768910031
Lanier 5135	110/60	USA, Canada	A230-55	L513982XXXX
Lanier 5134	220/50	Europe, Australia	A230-65	L513982XXXX
Ricoh Aficio340	220/50	China	A230-69	A768982XXXX
Gestetner 3235 Savin 9935DP	115/60	USA, Canada,	A231-10	1B98920001
Ricoh Aficio350	115/60	USA, Canada	A231-17	A7698910721
Ricoh Aficio350	110/60	Taiwan	A231-19	A769982XXXX
Gestetner 3235 nashuatec D435 Rex Rotaly 2835	220/50	Europe, etc.	A231-22	AQ39810001
Infotec 4352 MF	220/50	Europe, Australia	A231-26	3Q29280001
Ricoh Aficio350	220/50	Europe, etc.	A231-27	A7698920001
Ricoh Aficio350	220/50,60	Asia	A231-39	A769982XXXX
Lanier 5235	115/60	USA, Canada	A231-55	L5238921381
Lanier 5235	220/50	Europe, Australia	A231-65	L5238921641
Ricoh Aficio350	220/50	China	A231-69	A769982XXXX
Gestetner 3245 Savin 9945DP	115/60	USA, Canada,	A232-10	2B18920001
Ricoh Aficio450	115/60	USA, Canada	A232-17	A7708920378
Ricoh Aficio450	110/60	Taiwan	A232-19	A7708921102
Gestetner 3245 nashuatec D445 Rex-Rotaly 2845	220/50	Europe, etc.	A232-22	AQ58920001
Infotec 4451 MF	220/50	Europe, Australia	A232-26	3Q39280001
Ricoh Aficio450	220/50	Europe, etc.	A232-27	A7708920001
Ricoh Aficio450	220/50,60	Asia	A232-39	A7708916620
Lanier 5245	115/60	USA, Canada	A232-55	L5248921421
Lanier 5245	220/50	Europe, Australia	A232-65	L5248921281
Ricoh Aficio450	220/50	China	A232-69	A770982XXXX

			RPL PRODUCTION	
MODEL NAME	V/Hz	DESTINATION	CODE	SERIAL NUMBER
Gestetner 3235S nashuatec D435S Rex-Rotary 2835S	220/50	Europe, etc.	A230-52	AQ1829XXXX
Infotec 4351MF	220/50	Europe, Australia	A230-56	3Q1328XXXX
Ricoh Aficio340	220/50	Europe, etc.	A230-57	A768831XXXX
Gestetner 3235 nashuatec D435 Rex Rotary 2835	220/50	Europe, etc.	A231-52	AQ39210163
Infotec 4352 MF	220/50	Europe, Australia	A231-56	3Q22290001
Ricoh Aficio350	220/50	Europe, etc.	A231-57	A7699220001
Gestetner 3245 nashuatec D445 Rex-Rotary 2845	220/50	Europe, etc.	A232-52	AQ59210001
Infotec 4451 MF	220/50	Europe, Australia	A232-56	3Q32190001
Ricoh Aficio450	220/50	Europe, etc.	A232-57	A770921XXXX

RICOH

Modification Bulletin

Model: NAD 30S/30/40	Date: 15-Apr-99	No.: MA230014

Modified Article: Scanner Unit Plate			Prepared by: S. Hizen
From: Technical Service Dept., GTS Division			
Reason for Modification:	☐ Parts catalog correction ☒ To facilitate assembly ☐ Part standardization	☐ Vendor change ☐ To improve reliability ☐ Other	☐ To meet standards ( )

To facilitate molding in the factories, the material of the Scanner Unit Plate has been changed and the part number has also changed as shown in the table below.

Old part number	New part number	Description	Q'ty	Int	Page	Index	Note
A232-1090	A232-6807	Scanner Unit Plate	1	O/O	9	10	

Reissued: 15-May-99

Model: NAD 30S/30/40	Date: 15-Apr-99	No.: MA230015a

MB Correction

The items in bold italics have been corrected or added.

Modified Article: Scanner Arm Unit			Prepared by: S. Hizen
From: Technical Service Dept., GTS Division			
Reason for Modification:	☐ Parts catalog correction ☒ To facilitate assembly ☐ Part standardization	☐ Vendor change ☐ To improve reliability ☐ Other	☐ To meet standards ( )

To facilitate assembly in the factories, the following parts have been changed with an individual interchangeability of X/X. The interchangeability of these parts as a combination is O/O.

Old part number	New part number	Description	Q'ty	Int	Page	Index	Note
A232-1096	A232-1046	Scanner Arm Unit	1	X/X	13	25	
A232-1098	***A232-1048***	Support Plate – Scanner Arm	1	X/X	13	26	
A232-1097	A232-1047	Guide Plate – Scanner Unit	1	X/X	13	27	

NOTE: The interchangeability as a combination is O/O.
The number of screws (M4 X 8 : P/N 0354-0080B) has also been changed from 10 to 12.

Reissued: 15-May-99

Model: NAD 30S/30/40	Date: 15-Apr-99	No.: MA230016a

MB Correction

The items in bold italics have been corrected or added.

Modified Article: Entrance Junction Gate			Prepared by: S. Hizen
From: Technical Service Dept., GTS Division			
Reason for Modification:	☐ Parts catalog correction ☐ To facilitate assembly ☐ Part standardization	☐ Vendor change ☐ To improve reliability ☒ Other	☐ To meet standards ( )

Old part number	New part number	Description	Qty	Int	Page	Index	Note
A232-4467	A232-4452	Entrance Junction Gate	1-1	X/O	49	***12***	*

To prevent the junction gate shaft from being broken, the material of the junction gate has been changed from plastic to metal. The part number also has been changed as shown below.

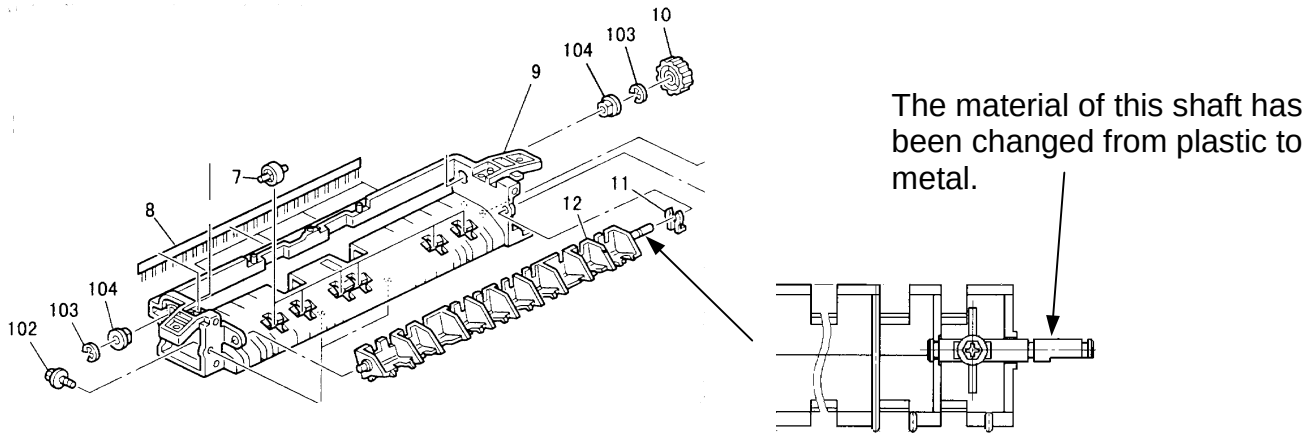

Note:

	Old	New
Part Number	A232-4467	A232-4452
Shaft Material	Plastic	Metal

			RAI PRODUCTION	
MODEL NAME	V/Hz	DESTINATION	CODE	SERIAL NUMBER
Gestetner 3235s Savin 9935D	115/60	USA, Canada,	A230-10	1B89820001
Ricoh Aficio340	115/60	USA, Canada	A230-17	A7689810001
Ricoh Aficio340	115/60	Taiwan	A230-19	A7689810061
Gestetner 3235S nashuatec D435S Rex-Rotaly 2835S	220/50	Europe, etc.	A230-22	AQ19810001
Infotec 4351MF	220/50	Europe, Australia	A230-26	3Q18290001
Ricoh Aficio340	220/50	Europe, etc.	A230-27	---
Ricoh Aficio340	220/50,60	Asia	A230-39	A768892081
Lanier 5135	110/60	USA, Canada	A230-55	---
Lanier 5134	220/50	Europe, Australia	A230-65	---
Ricoh Aficio340	220/50	China	A230-69	---
Gestetner 3235 Savin 9935DP	115/60	USA, Canada,	A231-10	1B99810001
Ricoh Aficio350	115/60	USA, Canada	A231-17	A7699810120
Ricoh Aficio350	110/60	Taiwan	A231-19	---
Gestetner 3235 nashuatec D435 Rex Rotaly 2835	220/50	Europe, etc.	A231-22	AQ39810001
Infotec 4352 MF	220/50	Europe, Australia	A231-26	3Q28190001
Ricoh Aficio350	220/50	Europe, etc.	A231-27	A7699810109
Ricoh Aficio350	220/50,60	Asia	A231-39	A7699811140
Lanier 5235	115/60	USA, Canada	A231-55	L5239811911
Lanier 5235	220/50	Europe, Australia	A231-65	L5239811791
Ricoh Aficio350	220/50	China	A231-69	---
Gestetner 3245 Savin 9945DP	115/60	USA, Canada,	A232-10	2B19810001
Ricoh Aficio450	115/60	USA, Canada	A232-17	A7709810216
Ricoh Aficio450	110/60	Taiwan	A232-19	A7709811236
Gestetner 3245 nashuatec D445 Rex-Rotaly 2845	220/50	Europe, etc.	A232-22	AQ59810001
Infotec 4451 MF	220/50	Europe, Australia	A232-26	3Q38190001
Ricoh Aficio450	220/50	Europe, etc.	A232-27	A7709810001
Ricoh Aficio450	220/50,60	Asia	A232-39	A7709811266
Lanier 5245	115/60	USA, Canada	A232-55	L5249811266
Lanier 5245	220/50	Europe, Australia	A232-65	L5249811991

Reissued: 15-May-99

Model: NAD 30S/30/40	Date: 15-Apr-99	No.: MA230016a

Ricoh Aficio450	220/50	China	A232-69	---

			RPL PRODUCTION	
MODEL NAME	V/Hz	DESTINATION	CODE	SERIAL NUMBER
Gestetner 3235S nashuatec D435S Rex-Rotary 2835S	220/50	Europe, etc.	A230-52	AQ1829XXXX
Infotec 4351MF	220/50	Europe, Australia	A230-56	3Q1328XXXX
Ricoh Aficio340	220/50	Europe, etc.	A230-57	A768831XXXX
Gestetner 3235 nashuatec D435 Rex Rotary 2835	220/50	Europe, etc.	A231-52	AQ3922XXXX
Infotec 4352 MF	220/50	Europe, Australia	A231-56	3Q2229XXXX
Ricoh Aficio350	220/50	Europe, etc.	A231-57	A7699220340
Gestetner 3245 nashuatec D445 Rex-Rotary 2845	220/50	Europe, etc.	A232-52	AQ5922XXXX
Infotec 4451 MF	220/50	Europe, Australia	A232-56	3Q3229XXXX
Ricoh Aficio450	220/50	Europe, etc.	A232-57	A770922XXXX

RICOH

Modification Bulletin

Model: NAD 30S/30/40	Date: 15-Apr-99	No.: MA230017

Modified Article: Bracket – Left Scale			Prepared by: S. Hizen
From: Technical Service Dept., GTS Division			
Reason for Modification:	☐ Parts catalog correction ☐ To facilitate assembly ☒ Part standardization	☐ Vendor change ☐ To improve reliability ☐ Other	☐ To meet standards ( )

Old part number	New part number	Description	Qty	Int	Page	Index	Note
A232-1675	A284-1675	Bracket – Left Scale	1	O/O	19	1	

To standardize the part with other models, this bracket has been changed from A232-1675 to A284-1675 with the interchangeability O/O.

RICOH **M**odification **B**ulletin

Model: NAD 30S/30/40	Date: 30-Apr-99	No.: MA230018

Modified Article: Scanner Arm			Prepared by: E. Fukuyama
From: Technical Service Dept., GTS Division			
Reason for Modification:	☐ Parts catalog correction ☒ To facilitate assembly ☐ Part standardization	☐ Vendor change ☐ To improve reliability ☐ Other	☐ To meet standards ( )

When assembling the scanner arm unit, place a spacer between the scanner arm unit and the guide plate to adjust the positioning. To facilitate this assembly, the shapes of the three parts listed below have been modified.

Old part Number	New part number	Description	Qty	Int	Page	Index	Note
A2321096	A2321046	Scanner Arm Unit	1	X/X	13	25	
A2321098	A2321048	Support Plate – Scanner Arm	1	X/X	13	26	
A2321097	A2321047	Guide Plate – Scanner Unit	1	X/X	13	27	

			RAI PRODUCTION	
MODEL NAME	V/Hz	DESTINATION	CODE	SERIAL NUMBER
Gestetner 3235s Savin 9935D	115/60	USA, Canada,	A230-10	1B88910001
Ricoh Aficio340	115/60	USA, Canada	A230-17	A7688910001
Ricoh Aficio340	115/60	Taiwan	A230-19	A768910061
Gestetner 3235S nashuatec D435S Rex-Rotary 2835S	220/50	Europe, etc.	A230-22	AQ18910001
Infotec 4351MF	220/50	Europe, Australia	A230-26	3Q19180001
Ricoh Aficio340	220/50	Europe, etc.	A230-27	
Ricoh Aficio340	220/50,60	Asia	A230-39	A7688910031
Lanier 5135	110/60	USA, Canada	A230-55	
Lanier 5134	220/50	Europe, Australia	A230-65	
Ricoh Aficio340	220/50	China	A230-69	
Gestetner 3235 Savin 9935DP	115/60	USA, Canada,	A231-10	1B98910001
Ricoh Aficio350	115/60	USA, Canada	A231-17	A7698910265
Ricoh Aficio350	110/60	Taiwan	A231-19	
Gestetner 3235 nashuatec D435 Rex Rotary 2835	220/50	Europe, etc.	A231-22	AQ39810001
Infotec 4352 MF	220/50	Europe, Australia	A231-26	3Q29180001
Ricoh Aficio350	220/50	Europe, etc.	A231-27	A7698910032
Ricoh Aficio350	220/50,60	Asia	A231-39	A7699811140
Lanier 5235	115/60	USA, Canada	A231-55	L5238911221
Lanier 5235	220/50	Europe, Australia	A231-65	L5238911071
Ricoh Aficio350	220/50	China	A231-69	
Gestetner 3245 Savin 9945DP	115/60	USA, Canada,	A232-10	2B18910001
Ricoh Aficio450	115/60	USA, Canada	A232-17	A7708910194
Ricoh Aficio450	110/60	Taiwan	A232-19	A7709811236
Gestetner 3245 nashuatec D445 Rex-Rotary 2845	220/50	Europe, etc.	A232-22	AQ58910001
Infotec 4451 MF	220/50	Europe, Australia	A232-26	3Q39180001
Ricoh Aficio450	220/50	Europe, etc.	A232-27	A7708910001
Ricoh Aficio450	220/50,60	Asia	A232-39	A7708910620
Lanier 5245	115/60	USA, Canada	A232-55	L5248910971
Lanier 5245	220/50	Europe, Australia	A232-65	L5248911181
Ricoh Aficio450	220/50	China	A232-69	

RICOH **M**odification **B**ulletin **PAGE: 1/2**

Model: NAD 30S/30/40	Date: 30-Apr-99	No.: MA230019

Modified Article: Sponge Seal: 8 x 8 x 1			Prepared by: S.Hizen
From: Technical Service Dept., GTS Division			
Reason for Modification:	☐ Parts catalog correction ☐ To facilitate assembly ☐ Part standardization	☐ Vendor change ☐ To improve reliability ☒ Other	☐ To meet standards ( )

To prevent developer leakage from both ends of the development unit, the thickness of the sponge has been increased from 1 mm to 2 mm.

Old part number	New part number	Description (New)	Qty	Int	Page	Index	Note
AA15-3059	AA15-3077	Sponge 8 x 8 x 2	2-2	X/O	45	29	

Developer Leak Mechanism

If there is a gap between the sponge seal and the development unit case, air will flow from inside the development unit to the outside. A small amount of developer is pushed out by this airflow. Please refer to the illustration below.

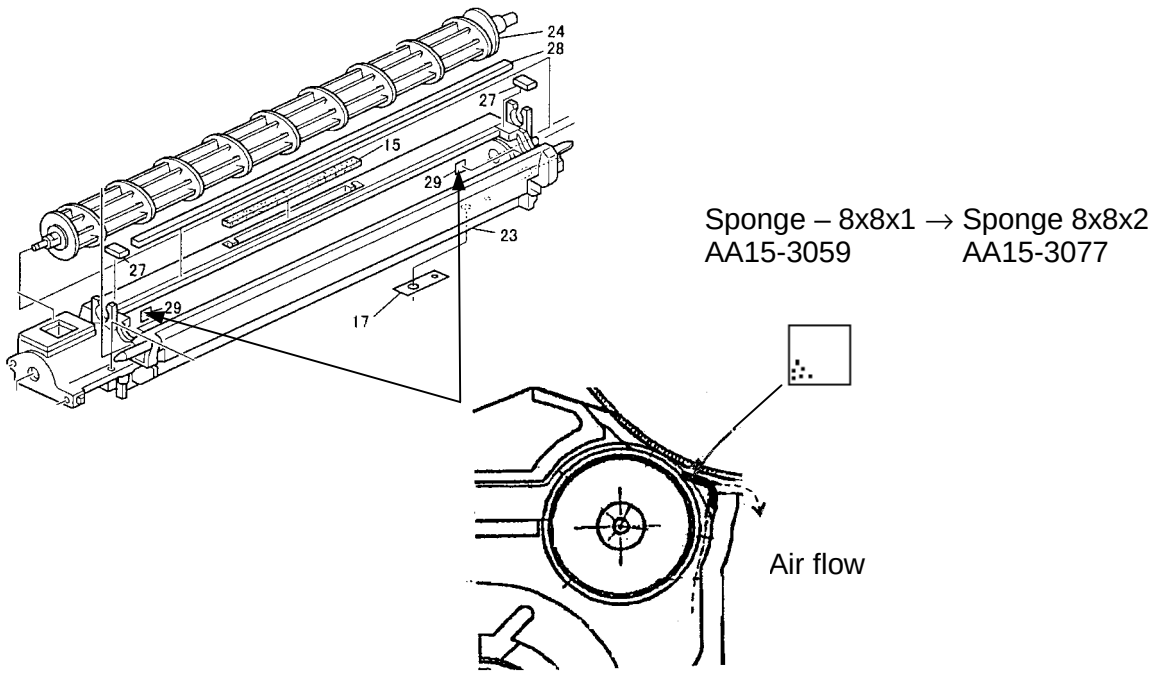

			RAI PRODUCTION	
MODEL NAME	V/Hz	DESTINATION	CODE	SERIAL NUMBER
Gestetner 3235s Savin 9935D	115/60	USA, Canada,	A230-10	1B88910001
Ricoh Aficio340	115/60	USA, Canada	A230-17	A7688910001
Ricoh Aficio340	115/60	Taiwan	A230-19	A7689810061
Gestetner 3235S nashuatec D435S Rex-Rotaly 2835S	220/50	Europe, etc.	A230-22	AQ18910001
Infotec 4351MF	220/50	Europe, Australia	A230-26	3Q19180001
Ricoh Aficio340	220/50	Europe, etc.	A230-27	
Ricoh Aficio340	220/50,60	Asia	A230-39	A7688910031
Lanier 5135	110/60	USA, Canada	A230-55	
Lanier 5134	220/50	Europe, Australia	A230-65	
Ricoh Aficio340	220/50	China	A230-69	
Gestetner 3235 Savin 9935DP	115/60	USA, Canada,	A231-10	1B98910001
Ricoh Aficio350	115/60	USA, Canada	A231-17	A7698910265
Ricoh Aficio350	110/60	Taiwan	A231-19	
Gestetner 3235 nashuatec D435 Rex Rotaly 2835	220/50	Europe, etc.	A231-22	AQ39810001
Infotec 4352 MF	220/50	Europe, Australia	A231-26	3Q29180001
Ricoh Aficio350	220/50	Europe, etc.	A231-27	A7698910047
Ricoh Aficio350	220/50,60	Asia	A231-39	A7699811140
Lanier 5235	115/60	USA, Canada	A231-55	L5238911221
Lanier 5235	220/50	Europe, Australia	A231-65	L5238911071
Ricoh Aficio350	220/50	China	A231-69	
Gestetner 3245 Savin 9945DP	115/60	USA, Canada,	A232-10	2B18910001
Ricoh Aficio450	115/60	USA, Canada	A232-17	A7708910194
Ricoh Aficio450	110/60	Taiwan	A232-19	A7709811236
Gestetner 3245 nashuatec D445 Rex-Rotaly 2845	220/50	Europe, etc.	A232-22	AQ58910001
Infotec 4451 MF	220/50	Europe, Australia	A232-26	3Q39180001
Ricoh Aficio450	220/50	Europe, etc.	A232-27	A7708910001
Ricoh Aficio450	220/50,60	Asia	A232-39	A7708910620
Lanier 5245	115/60	USA, Canada	A232-55	L5248910971
Lanier 5245	220/50	Europe, Australia	A232-65	L5248911181
Ricoh Aficio450	220/50	China	A232-69	

RICOH

Modification Bulletin

Model: NAD 30S/30/40	Date: 30-Apr-99	No.: MA230020

Modified Article: Pressure Spring			Prepared by: S. Hizen
From: Technical Service Dept., GTS Division			
Reason for Modification:	☐ Parts catalog correction ☐ To facilitate assembly ☐ Part standardization	☐ Vendor change ☐ To improve reliability ☒ Other	☐ To meet standards ( )

To reduce the wear on the drum caused by the pick-off pawls, the tension of the pressure springs of the pick-off pawls has been changed as follows:

Old part number	New part number	Description	Qty	Int	Page	Index	Note
AA06-2302	AA06-2310	Pressure Spring	2-2	X/O	39	5	

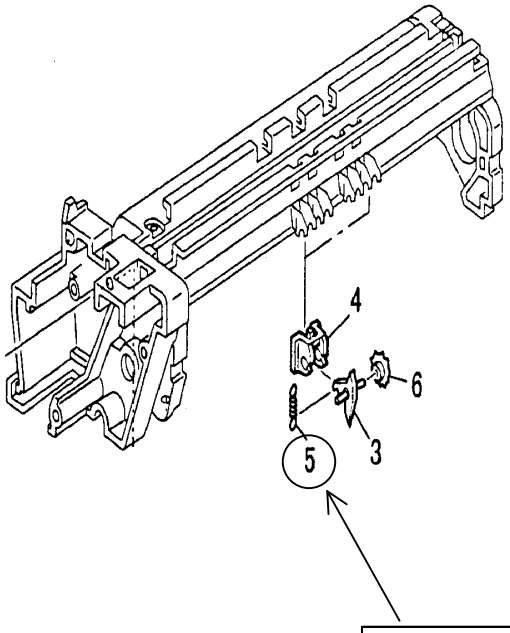

	Old	New
Part No.	AA06-2302	AA06-2310
Color	Brown	Silver
Tension	5.5mN	4.0mN

			RAI PRODUCTION	
MODEL NAME	V/Hz	DESTINATION	CODE	SERIAL NUMBER
Gestetner 3235s Savin 9935D	115/60	USA, Canada,	A230-10	1B89810065
Ricoh Aficio340	115/60	USA, Canada	A230-17	A768982XXXX
Ricoh Aficio340	115/60	Taiwan	A230-19	A768982XXXX
Gestetner 3235S nashuatec D435S Rex-Rotaly 2835S	220/50	Europe, etc.	A230-22	AQ1982XXXX
Infotec 4351MF	220/50	Europe, Australia	A230-26	3Q1829XXXX
Ricoh Aficio340	220/50	Europe, etc.	A230-27	A768982XXXX
Ricoh Aficio340	220/50,60	Asia	A230-39	A768982XXXX
Lanier 5135	110/60	USA, Canada	A230-55	L513982XXXX
Lanier 5134	220/50	Europe, Australia	A230-65	L513982XXXX
Ricoh Aficio340	220/50	China	A230-69	A768982XXXX
Gestetner 3235 Savin 9935DP	115/60	USA, Canada,	A231-10	1B9982XXXX
Ricoh Aficio350	115/60	USA, Canada	A231-17	A769982XXXX
Ricoh Aficio350	110/60	Taiwan	A231-19	A769982XXXX
Gestetner 3235 nashuatec D435 Rex Rotaly 2835	220/50	Europe, etc.	A231-22	AQ3982XXXX
Infotec 4352 MF	220/50	Europe, Australia	A231-26	3Q2829XXXX
Ricoh Aficio350	220/50	Europe, etc.	A231-27	Q769982XXXX
Ricoh Aficio350	220/50,60	Asia	A231-39	Q769982XXXX
Lanier 5235	115/60	USA, Canada	A231-55	L523982XXXX
Lanier 5235	220/50	Europe, Australia	A231-65	L523982XXXX
Ricoh Aficio350	220/50	China	A231-69	A769982XXXX
Gestetner 3245 Savin 9945DP	115/60	USA, Canada,	A232-10	2B1982XXXX
Ricoh Aficio450	115/60	USA, Canada	A232-17	A7709810001
Ricoh Aficio450	110/60	Taiwan	A232-19	A770982XXXX
Gestetner 3245 nashuatec D445 Rex-Rotaly 2845	220/50	Europe, etc.	A232-22	AQ5982XXXX
Infotec 4451 MF	220/50	Europe, Australia	A232-26	3Q3829XXXX
Ricoh Aficio450	220/50	Europe, etc.	A232-27	A770982XXXX
Ricoh Aficio450	220/50,60	Asia	A232-39	A770982XXXX
Lanier 5245	115/60	USA, Canada	A232-55	L524982XXXX
Lanier 5245	220/50	Europe, Australia	A232-65	L524982XXXX
Ricoh Aficio450	220/50	China	A232-69	A770982XXXX

RICOH **M**odification **B**ulletin

Model: NAD 30S/30/40	Date: 30-Apr-99	No.: MA230021

Modified Article: SBU Harness			Prepared by: S. Hizen
From: Technical Service Dept., GTS Division			
Reason for Modification:	☐ Parts catalog correction ☐ To facilitate assembly ☐ Part standardization	☐ Vendor change ☐ To improve reliability ☐ Other	☒ To meet standards (EMI)

To meet the standard for EMI (Electromagnetic Interference), a ferrite core has been added to the SBU harness, and the part number of the SBU harness has been changed as follows:

Old part number	New part number	Description	Q'ty	Int	Page	Index	Note
A232-5491	A232-5490	SBU Harness	1	X/O	19	19	

			RAI PRODUCTION	
MODEL NAME	V/Hz	DESTINATION	CODE	SERIAL NUMBER
Gestetner 3235s Savin 9935D	115/60	USA, Canada,	A230-10	1B8981XXXX
Ricoh Aficio340	115/60	USA, Canada	A230-17	A7688920001
Ricoh Aficio340	115/60	Taiwan	A230-19	A768981XXXX
Gestetner 3235S nashuatec D435S Rex-Rotaly 2835S	220/50	Europe, etc.	A230-22	AQ1981XXXX
Infotec 4351MF	220/50	Europe, Australia	A230-26	3Q1819XXXX
Ricoh Aficio340	220/50	Europe, etc.	A230-27	A768981XXXX
Ricoh Aficio340	220/50,60	Asia	A230-39	A768981XXXX
Lanier 5135	110/60	USA, Canada	A230-55	A768981XXXX
Lanier 5134	220/50	Europe, Australia	A230-65	L513981XXXX
Ricoh Aficio340	220/50	China	A230-69	A768981XXXX
Gestetner 3235 Savin 9935DP	115/60	USA, Canada,	A231-10	1B9981XXXX
Ricoh Aficio350	115/60	USA, Canada	A231-17	A769981XXXX
Ricoh Aficio350	110/60	Taiwan	A231-19	A769981XXXX
Gestetner 3235 nashuatec D435 Rex Rotaly 2835	220/50	Europe, etc.	A231-22	AQ38920001
Infotec 4352 MF	220/50	Europe, Australia	A231-26	3Q28190001
Ricoh Aficio350	220/50	Europe, etc.	A231-27	A769981XXXX
Ricoh Aficio350	220/50,60	Asia	A231-39	A769981XXXX
Lanier 5235	115/60	USA, Canada	A231-55	L523981XXXX
Lanier 5235	220/50	Europe, Australia	A231-65	L523981XXXX
Ricoh Aficio350	220/50	China	A231-69	A769981XXXX
Gestetner 3245 Savin 9945DP	115/60	USA, Canada,	A232-10	2B18920001
Ricoh Aficio450	115/60	USA, Canada	A232-17	A7708920001
Ricoh Aficio450	110/60	Taiwan	A232-19	A770981XXXX
Gestetner 3245 nashuatec D445 Rex-Rotaly 2845	220/50	Europe, etc.	A232-22	AQ5981XXXX
Infotec 4451 MF	220/50	Europe, Australia	A232-26	3Q3819XXXX
Ricoh Aficio450	220/50	Europe, etc.	A232-27	A770981XXXX
Ricoh Aficio450	220/50,60	Asia	A232-39	A7708920001
Lanier 5245	115/60	USA, Canada	A232-55	L524981XXXX
Lanier 5245	220/50	Europe, Australia	A232-65	L524981XXXX
Ricoh Aficio450	220/50	China	A232-69	A770981XXXX

RICOH

Modification Bulletin

Model: NAD 30S/30/40	Date: 30-Apr-99	No.: MA230022

Modified Article: Cleaning Pad			Prepared by: S. Hizen
From: Technical Service Dept., GTS Division			
Reason for Modification:	☐ Parts catalog correction ☐ To facilitate assembly ☐ Part standardization	☐ Vendor change ☐ To improve reliability ☒ Other	☐ To meet standards ( )

Old part number	New part number	Description	Qty	Int	Page	Index	Note
A232-2301	A232-2430	Cleaning Pad	1-1	X/O	39	13	

To prevent the charge roller from vibrating slightly, the shape and position of the cleaning pad have been changed as shown in the illustration below.

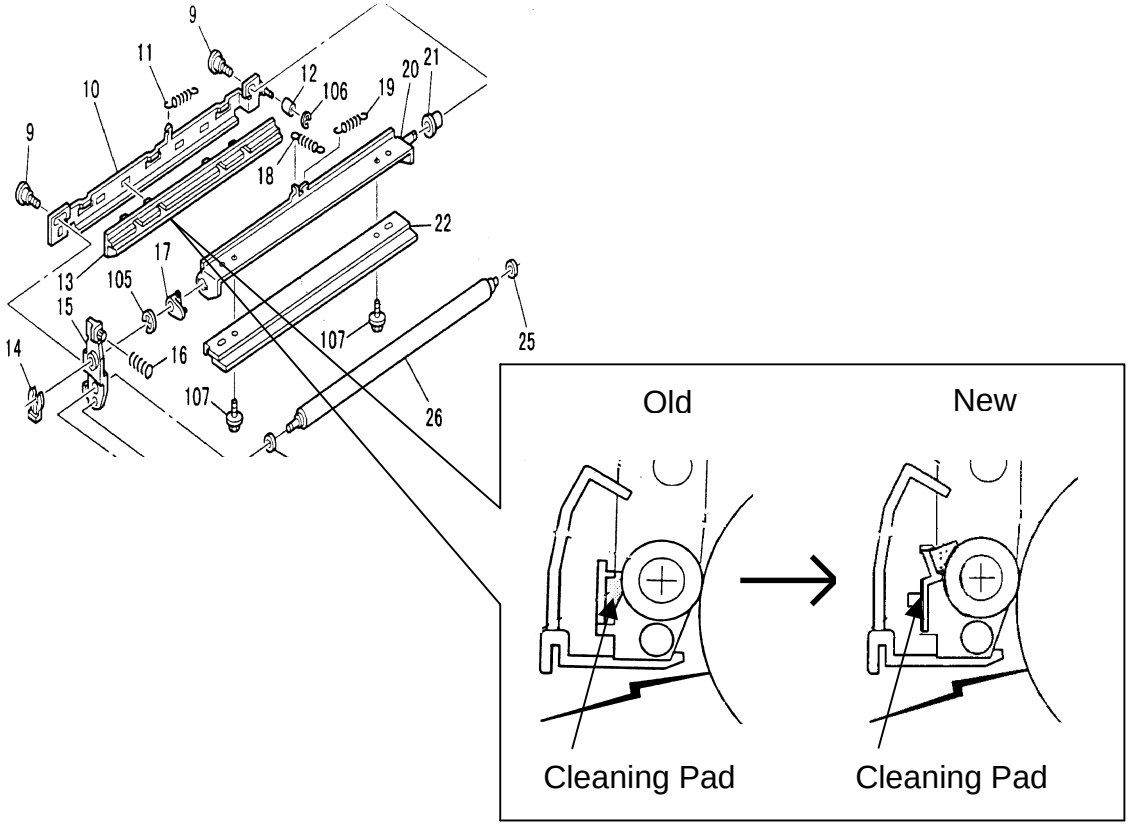

			RAI PRODUCTION	
MODEL NAME	V/Hz	DESTINATION	CODE	SERIAL NUMBER
Gestetner 3235s Savin 9935D	115/60	USA, Canada,	A230-10	1B8981XXXX
Ricoh Aficio340	115/60	USA, Canada	A230-17	A7688920001
Ricoh Aficio340	115/60	Taiwan	A230-19	A768981XXXX
Gestetner 3235S nashuatec D435S Rex-Rotaly 2835S	220/50	Europe, etc.	A230-22	AQ1981XXXX
Infotec 4351MF	220/50	Europe, Australia	A230-26	3Q1819XXXX
Ricoh Aficio340	220/50	Europe, etc.	A230-27	A768981XXXX
Ricoh Aficio340	220/50,60	Asia	A230-39	A768981XXXX
Lanier 5135	110/60	USA, Canada	A230-55	A768981XXXX
Lanier 5134	220/50	Europe, Australia	A230-65	L513981XXXX
Ricoh Aficio340	220/50	China	A230-69	A768981XXXX
Gestetner 3235 Savin 9935DP	115/60	USA, Canada,	A231-10	1B9981XXXX
Ricoh Aficio350	115/60	USA, Canada	A231-17	A769981XXXX
Ricoh Aficio350	110/60	Taiwan	A231-19	A769981XXXX
Gestetner 3235 nashuatec D435 Rex Rotaly 2835	220/50	Europe, etc.	A231-22	AQ38920001
Infotec 4352 MF	220/50	Europe, Australia	A231-26	3Q28190001
Ricoh Aficio350	220/50	Europe, etc.	A231-27	A769981XXXX
Ricoh Aficio350	220/50,60	Asia	A231-39	A769981XXXX
Lanier 5235	115/60	USA, Canada	A231-55	L523981XXXX
Lanier 5235	220/50	Europe, Australia	A231-65	L523981XXXX
Ricoh Aficio350	220/50	China	A231-69	A769981XXXX
Gestetner 3245 Savin 9945DP	115/60	USA, Canada,	A232-10	2B18920001
Ricoh Aficio450	115/60	USA, Canada	A232-17	A7708920001
Ricoh Aficio450	110/60	Taiwan	A232-19	A770981XXXX
Gestetner 3245 nashuatec D445 Rex-Rotaly 2845	220/50	Europe, etc.	A232-22	AQ5981XXXX
Infotec 4451 MF	220/50	Europe, Australia	A232-26	3Q3819XXXX
Ricoh Aficio450	220/50	Europe, etc.	A232-27	A770981XXXX
Ricoh Aficio450	220/50,60	Asia	A232-39	A7708920001
Lanier 5245	115/60	USA, Canada	A232-55	L524981XXXX
Lanier 5245	220/50	Europe, Australia	A232-65	L524981XXXX
Ricoh Aficio450	220/50	China	A232-69	A770981XXXX

Reissued: 15-Jun-99

Model: NAD 30S/30/40	Date: 30-Apr-99	No.: MA230023a

MB Correction

The items in bold italics have been corrected or added.

Modified Article: Paper Curl Kit			Prepared by: S. Hizen
From: Technical Service Dept., GTS Division			
Reason for Modification:	☐ Parts catalog correction ☐ To facilitate assembly ☐ Part standardization	☐ Vendor change ☐ To improve reliability ☒ Other	☐ To meet standards ( )

Old part number	New part number	Description	Qty	Int	Page	Index	Note
-	***A697-9512***	Paper Curl Kit	1	-	-	-	-
A697-6181	A697-6182	Left Upper Cover	1-1	X/O	7	9	-

The paper curl kit P/N: ***A697-9512*** has been registered as a service part. The screw holes for the curl kit have been added to the left upper cover. The part number of the cover has been changed.

Note: This paper curl kit is only for the SR730 installed on the NAD.
Do not use this kit for the SR730 installed on the SP5.

Paper Curl Kit: A697-9512

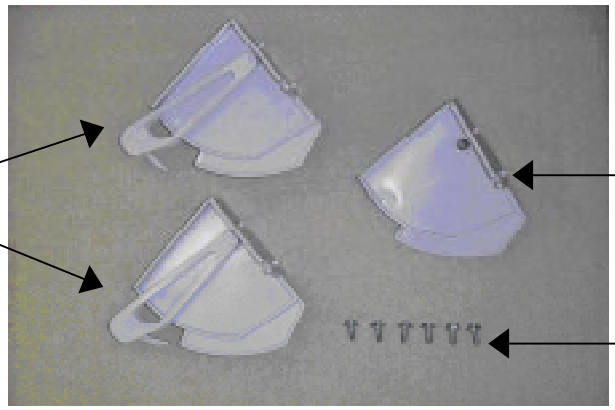

Model: NAD 30S/30/40	Date: 30-Apr-99	No.: MA230023a

