NAD 30/30S/40 (A230/A231/A232)

PARTS CATALOG

First Edition March 1998

RICOH CAMPANY,LTD

PARTS CATALOG

INTRODUCTION

This chapter instructs you the numbers and names of parts on this machine.

INDEX to PARTS CATALOG

NAD30/30S/40	**(A230/A231/A232)**
DF67	**(A680)**
RT36	**(A683)**
PS360	**(A682)**
SR720	**(A681)**
SR730	**(A697)**
1Bin Tray Unit	**(A684)**
Bridge Unit	**(A688)**
Fax Option type 450	**(A693/A818/A816/A646)**

NAD 30/30S/40 (A230/A231/A232)

PARTS CATALOG

INTRODUCTION

This chapter instructs you the numbers and names of parts on this machine.

INDEX to PARTS CATALOG

LOCATION OF UNIT..... 2
1.EXTERIOR 1 (A230/A231/A232)..... 8
2.EXTERIOR 2 (A230/A231/A232)..... 10
3.EXTERIOR 3 (A230/A231/A232)..... 12
4.PLATEN COVER (A381)..... 14
5.OPERATION PANEL ASS'Y (A230/A231/A232)..... 16
6.OPTICS UNIT 1 (A230/A231/A232)..... 18
7.OPTICS UNIT 2 (A230/A231/A232)..... 20
8.LASER UNIT (A230/A231/A232)..... 22
9.BY-PASS FEED UNIT 1 (A689)..... 24
10.BY-PASS FEED UNIT 2 (A689)..... 26
11.PAPER FEED SECTION (A230/A231/A232)..... 28
12.PAPER REGISTRATION (A230/A231/A232)..... 30
13.PAPER TRAY UNIT (A230/A231/A232)..... 32
14.TONER HOPPER UNIT (A230/A231/A232)..... 34
15.PCU UNIT 1 (A230/A231/A232)..... 36
16.PCU UNIT 2 (A230/A231/A232)..... 38
17.TRANSFER UNIT 1 (A230/A231/A232)..... 40
18.TRANSFER UNIT 2 (A230/A231/A232)..... 42
19.DEVELOPMENT UNIT (A230/A231/A232)..... 44
20.FUSING UNIT (A230/A231/A232)..... 46
21.PAPER SEPARATION UNIT (A230/A231/A232)..... 48
22.DUPLEX UNIT 1 (A687)..... 50
23.DUPLEX UNIT 2 (A687)..... 52
24.DUPLEX UNIT 3 (A687)..... 54
25.DRIVE SECTION 1 (A230/A231/A232)..... 56
26.DRIVE SECTION 2 (A230/A231/A232)..... 58
27.ELECTRICAL SECTION 1 (A230/A231/A232)..... 60
28.ELECTRICAL SECTION 2 (A230/A231/A232)..... 62
29.FRAME SECTION 1 (A230/A231/A232)..... 64
30.FRAME SECTION 2 (A230/A231/A232)..... 66
31.OPTION HDD UNIT (A691)..... 68
32.OPTION EXIT TRAY (A825)..... 70
33.KEY COUNTER UNIT (A674)..... 72
34.EXPANSION BOX (A692)..... 74
35.IOB BOARD(A230/A231/A232)..... 76
36.BICU BOARD(A230/A231/A232)..... 80
37.DECAL AND DOCUMENT (A230/A231/A232)..... 86

38.SPECIAL TOOLS (A230/A231/A232) 88
PARTS INDEX 91

LOCATION OF UNIT

1.EXTERIOR 1 (A230/A231/A232)

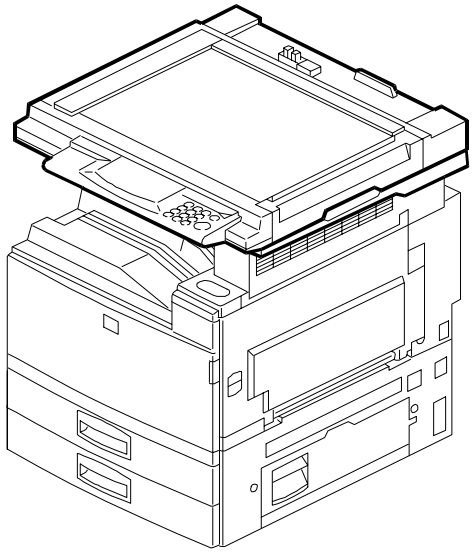

See Page 9

2.EXTERIOR 2 (A230/A231/A232)

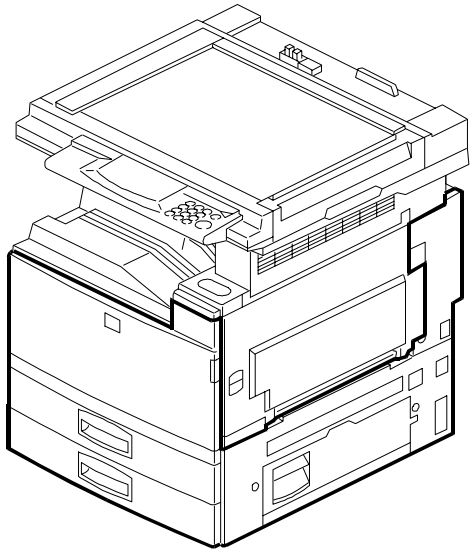

See Page 11

3.EXTERIOR 3 (A230/A231/A232)

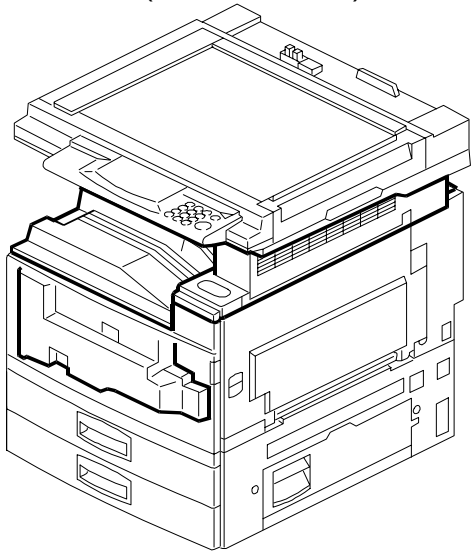

See Page 13

4.PLATEN COVER (A381)

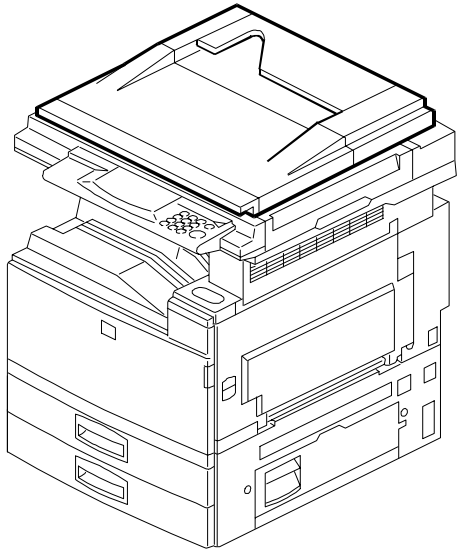

See Page 15

5.OPERATION PANEL ASS'Y (A230/A231/A232)

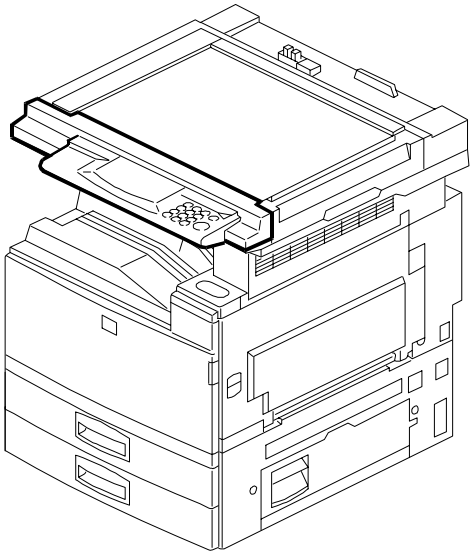

See Page 17

6.OPTICS UNIT 1 (A230/A231/A232)

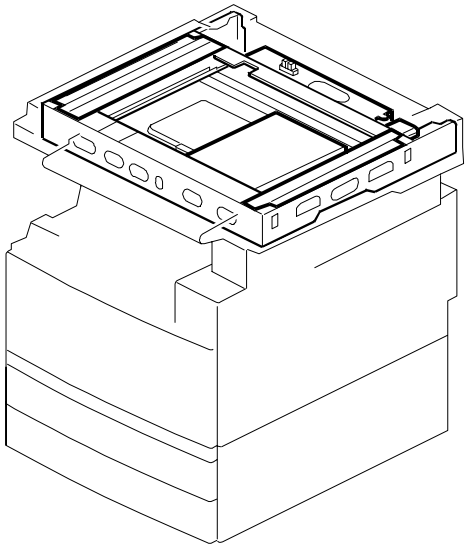

See Page 19

LOCATION OF UNIT

7.OPTICS UNIT 2 (A230/A231/A232)

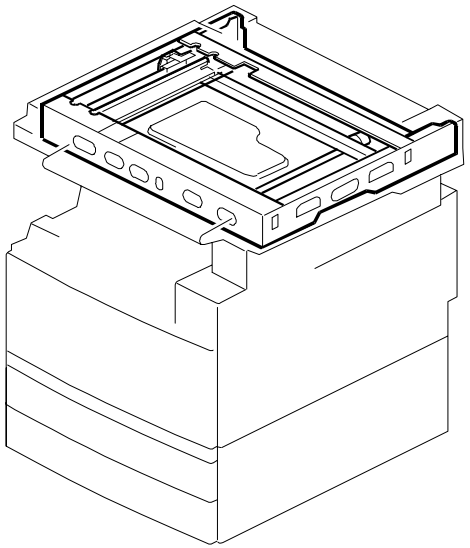

See Page 21

8.LASER UNIT (A230/A231/A232)

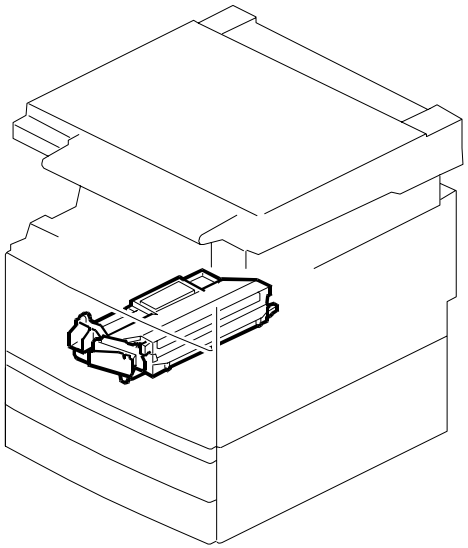

See Page 23

9.BY-PASS FEED UNIT 1 (A689)

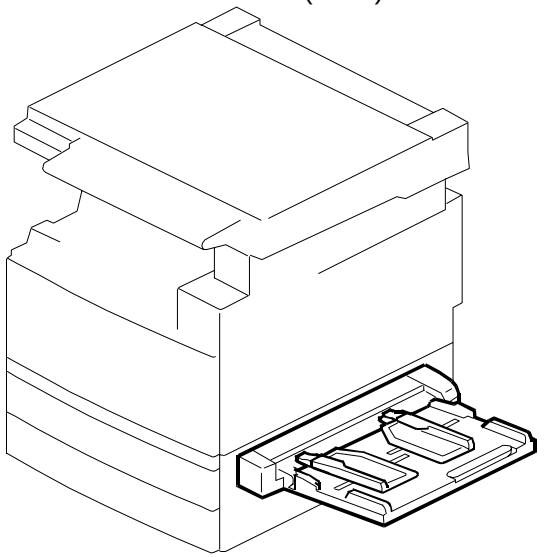

See Page 25

10.BY-PASS FEED UNIT 2 (A689)

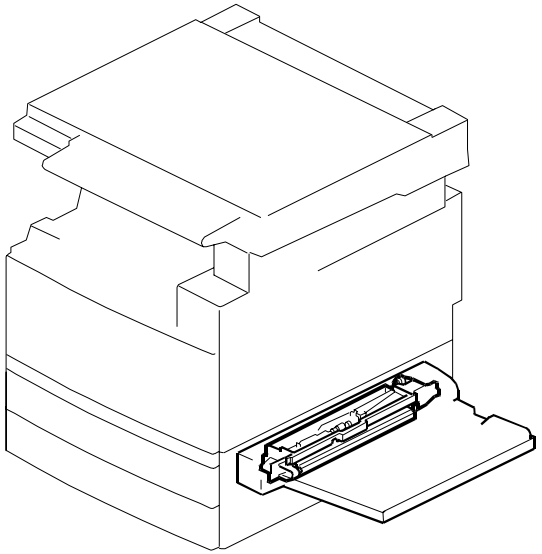

See Page 27

11.PAPER FEED SECTION (A230/A231/A232)

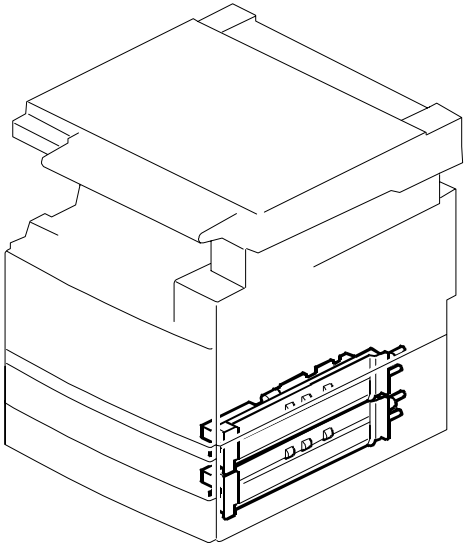

See Page 29

12.PAPER REGISTRATION (A230/A231/A232)

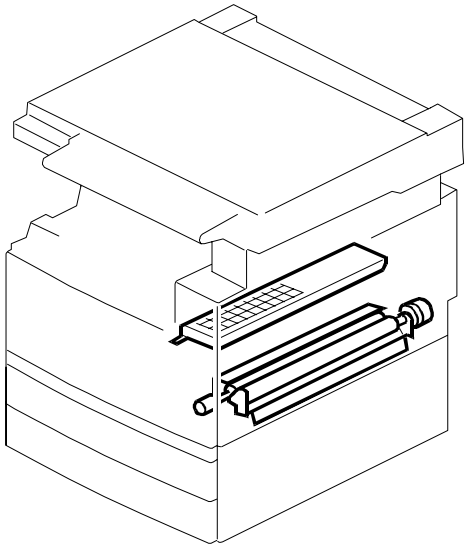

See Page 31

LOCATION OF UNIT

13.PAPER TRAY UNIT (A230/A231/A232)

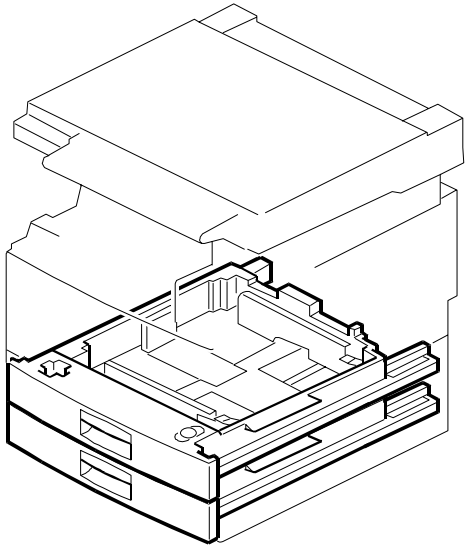

See Page 33

14.TONER HOPPER UNIT (A230/A231/A232)

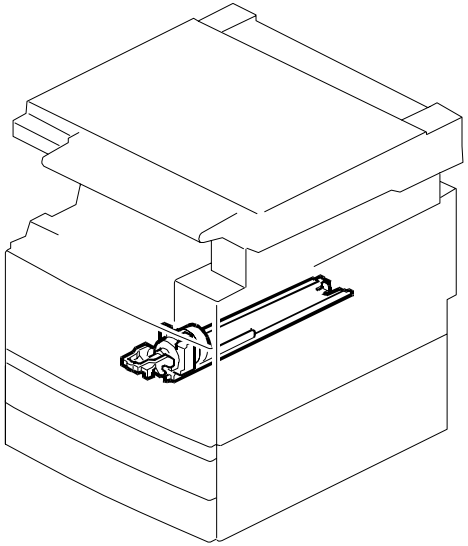

See Page 35

15.PCU UNIT 1 (A230/A231/A232)

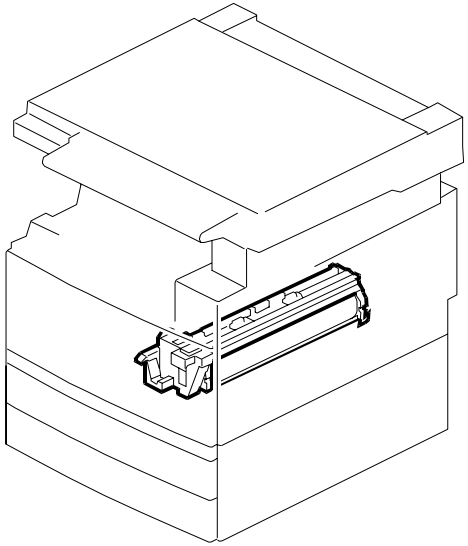

See Page 37

16.PCU UNIT 2 (A230/A231/A232)

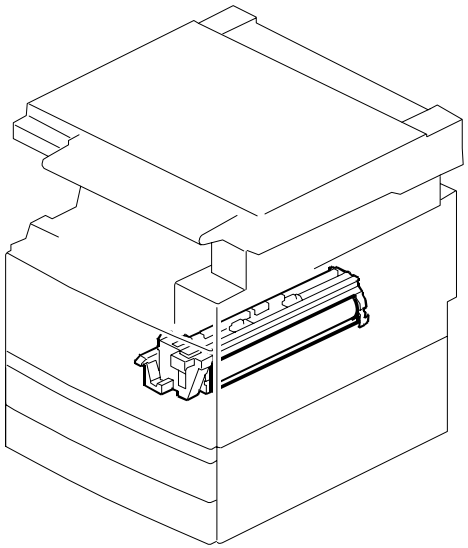

See Page 39

17.TRANSFER UNIT 1 (A230/A231/A232)

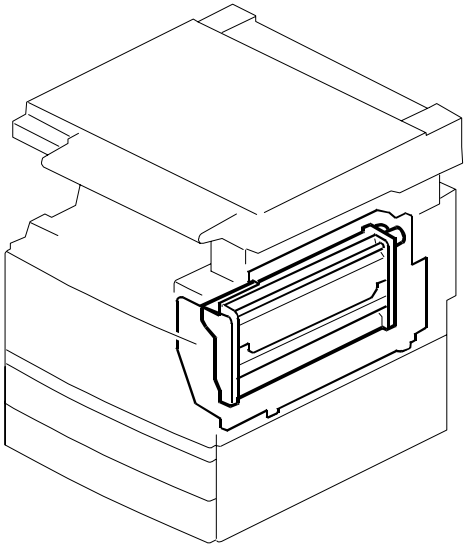

See Page 41

18.TRANSFER UNIT 2 (A230/A231/A232)

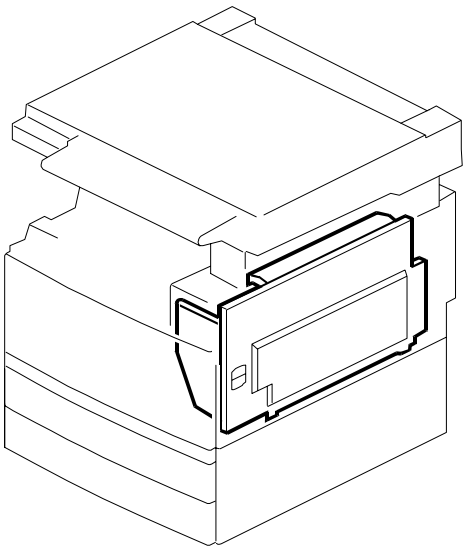

See Page 43

LOCATION OF UNIT

19.DEVELOPMENT UNIT (A230/A231/A232)

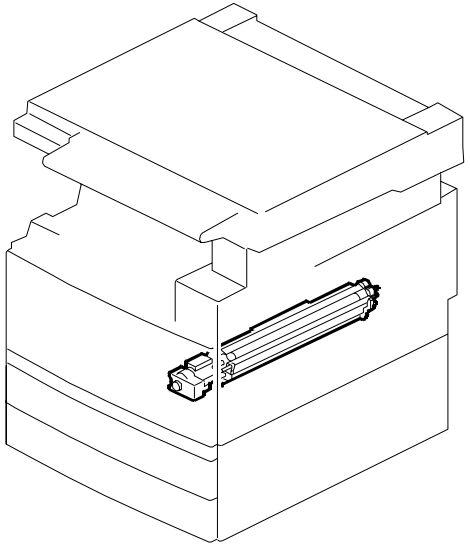

See Page 45

20.FUSING UNIT (A230/A231/A232)

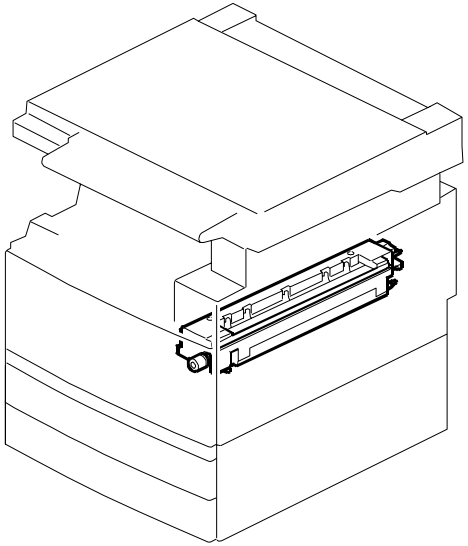

See Page 47

21.PAPER SEPARATION UNIT (A230/A231/A232)

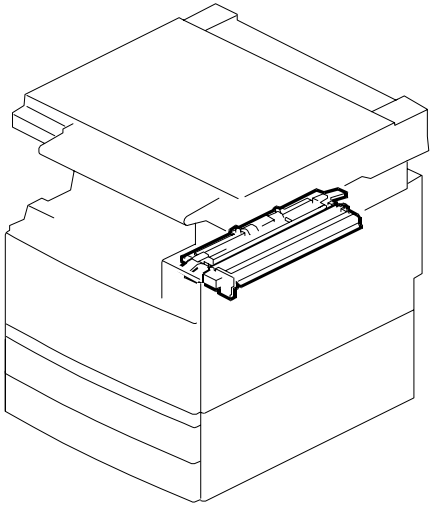

See Page 49

22.DUPLEX UNIT 1 (A687)

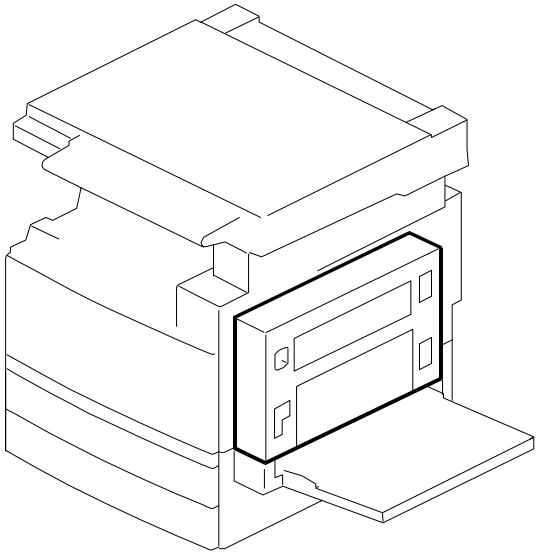

See Page 51

23.DUPLEX UNIT 2 (A687)

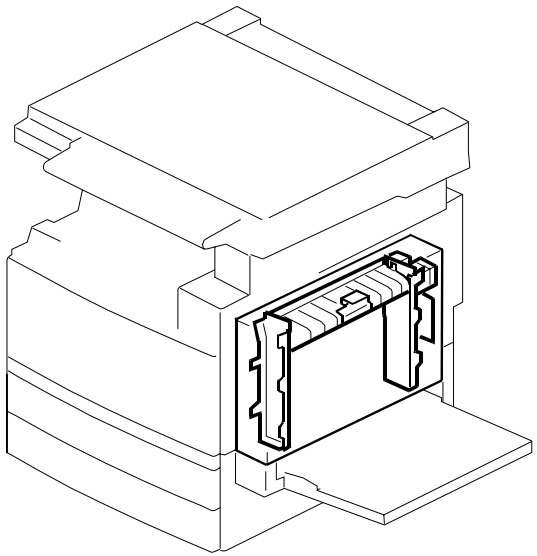

See Page 53

24.DUPLEX UNIT 3 (A687)

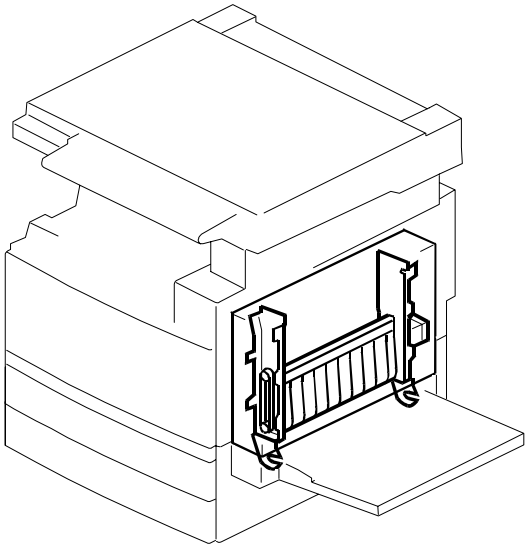

See Page 55

LOCATION OF UNIT

25.DRIVE SECTION 1 (A230/A231/A232)

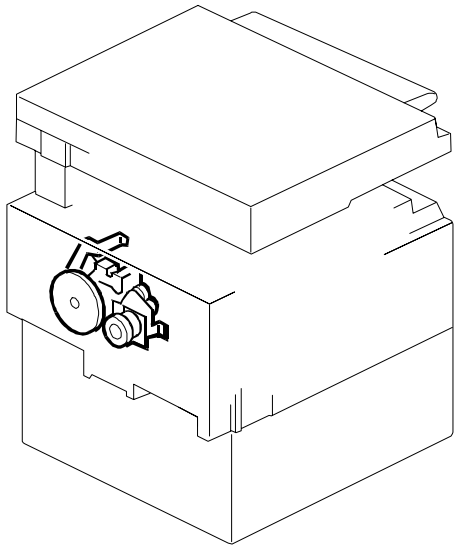

See Page 57

26.DRIVE SECTION 2 (A230/A231/A232)

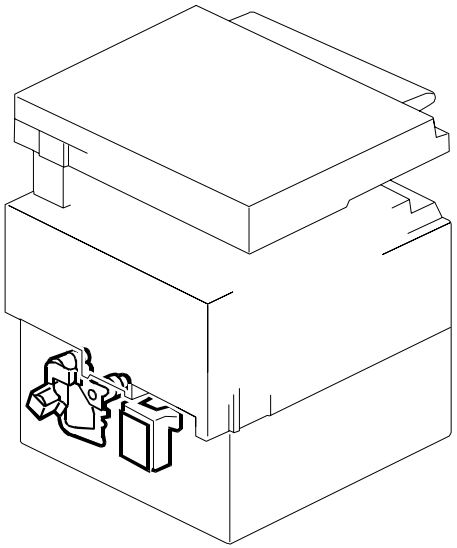

See Page 59

27.ELECTRICAL SECTION 1 (A230/A231/A232)

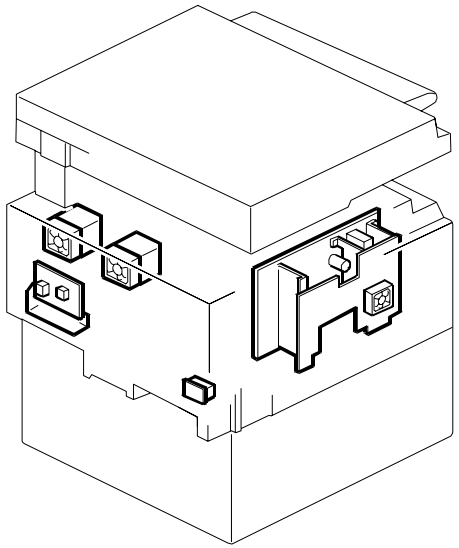

See Page 61

28.ELECTRICAL SECTION 2 (A230/A231/A232)

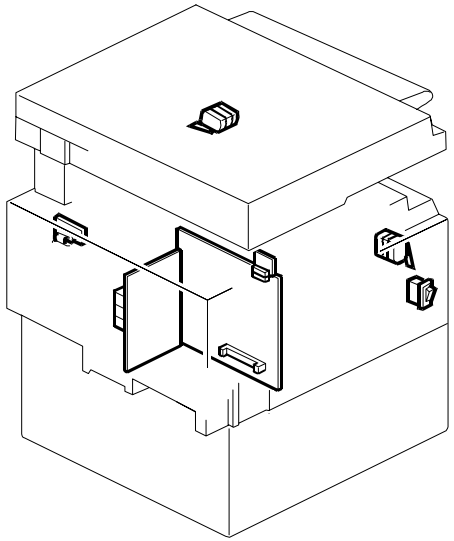

See Page 63

29.FRAME SECTION 1 (A230/A231/A232)

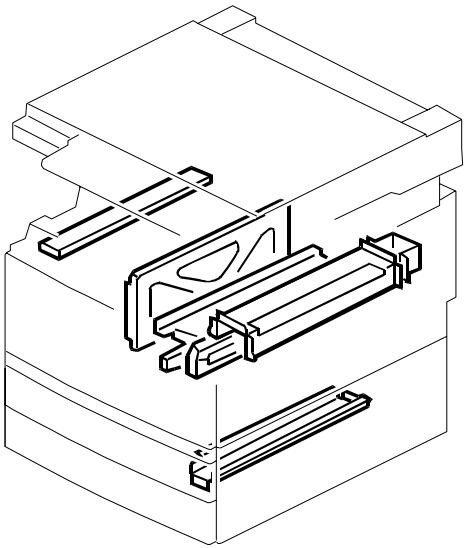

See Page 65

30.FRAME SECTION 2 (A230/A231/A232)

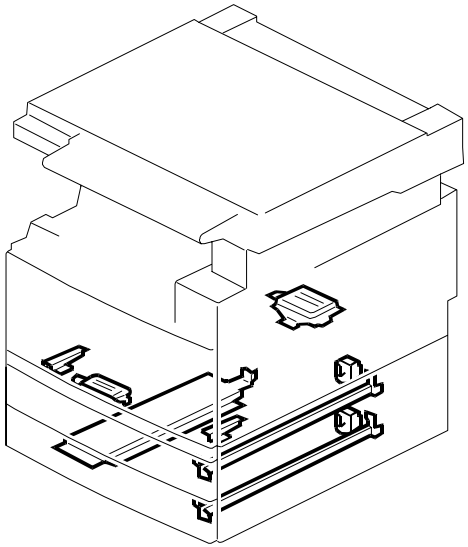

See Page 67

LOCATION OF UNIT

31.OPTION HDD UNIT (A691)

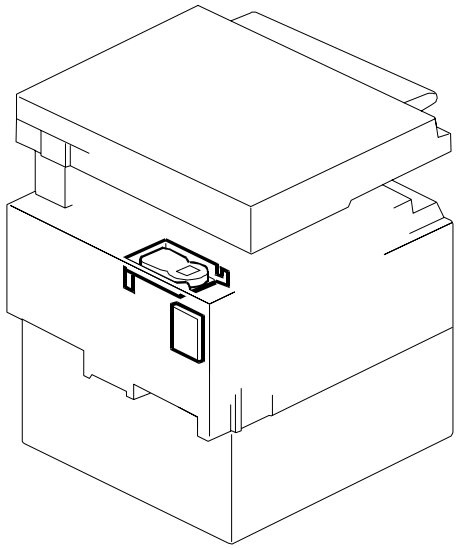

See Page 69

32.OPTION EXIT TRAY (A825)

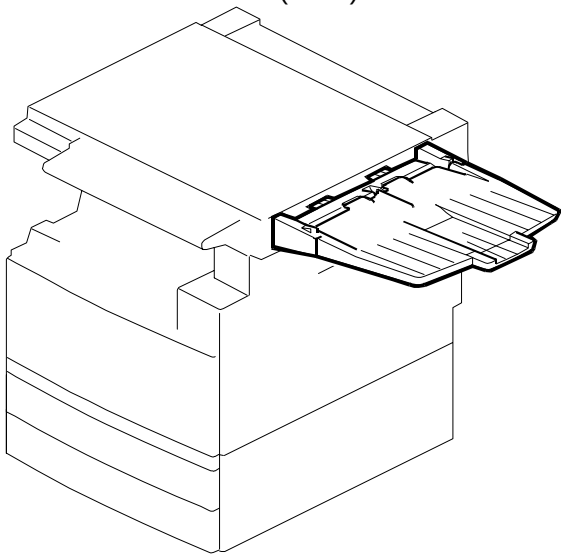

See Page 71

33.KEY COUNTER UNIT (A674)

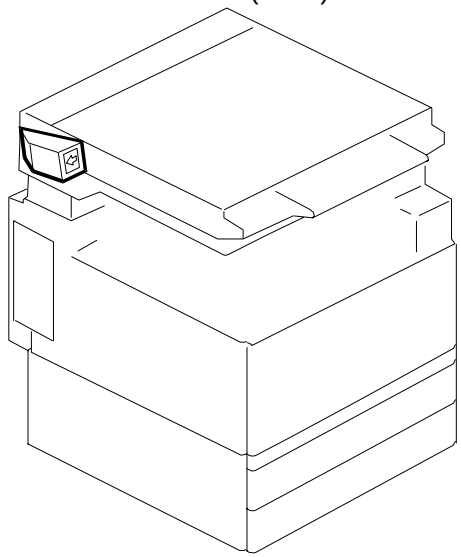

See Page 73

34.EXPANSION BOX (A692)

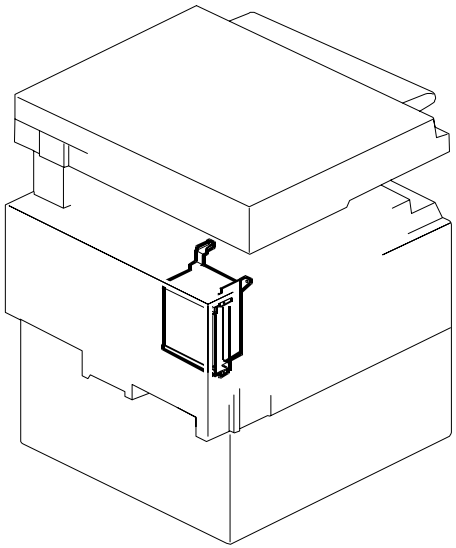

See Page 75

1.EXTERIOR 1 (A230/A231/A232)

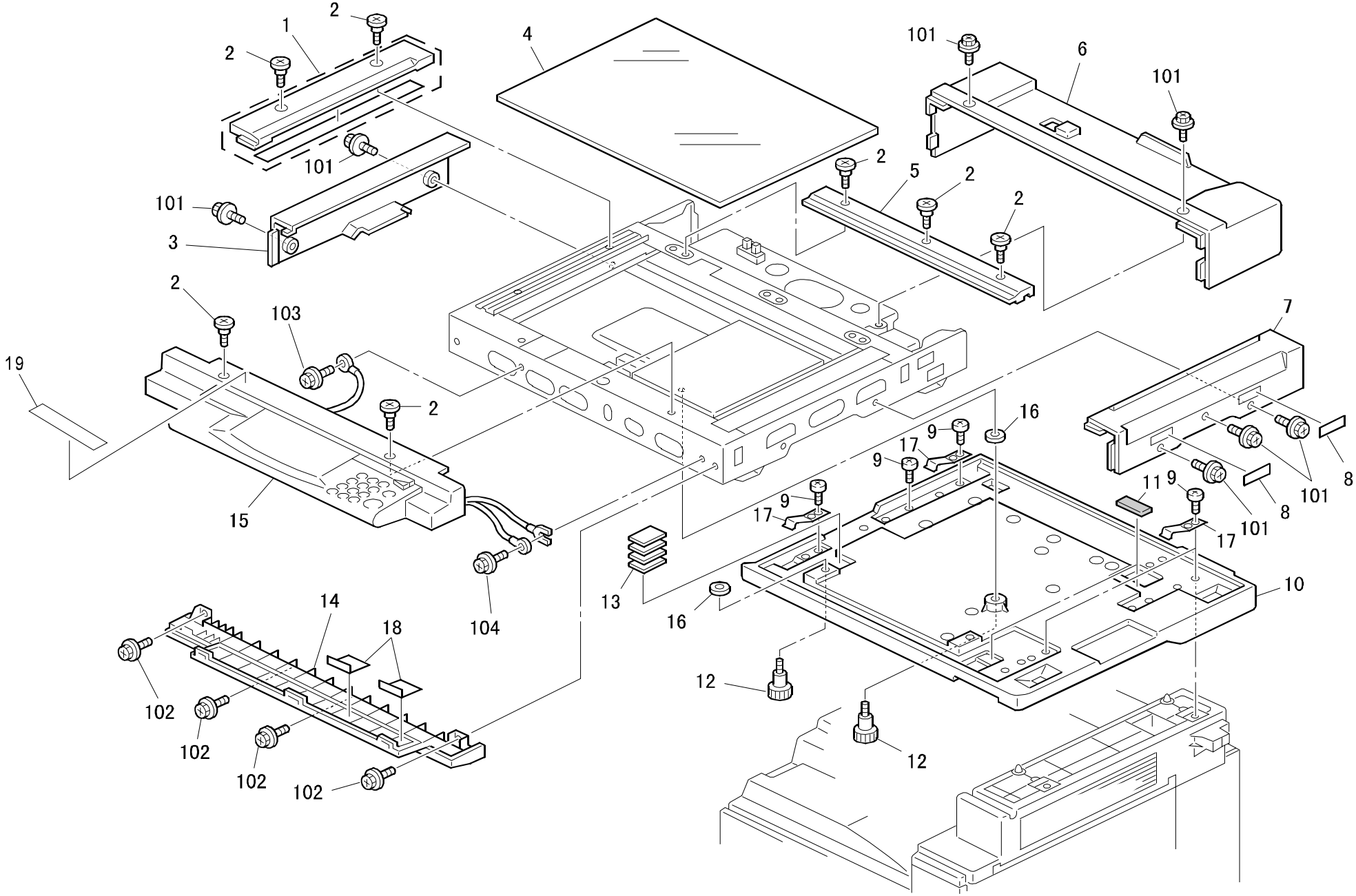

1.EXTERIOR 1 (A230/A231/A232)

Index No.	Part No.	Description	Q'ty Per Assembly
1	A232 1672	Left Scale	1
2	5206 2684	Shoulder Screw - M3	7
3	A232 1357	Left Cover - Scanner	1
4	AC01 2064	Exposure Glass	1
5	A232 1677	Rear Scale	1
6	A232 1350	Upper Rear Cover - Scanner	1
7	A232 1356	Right Cover - Scanner	1
8	A232 1383	Decal - Right Scanner Cover	2
9	A217 1340	Knob Screw - M4x10	4
10	A232 1090	Scanner Unit Plate	1
11	A232 1663	Cusion - Scanner Unit Plate	2
12	AA14 3500	Stepped Screw - M6	2
13	A232 1846	Spacer - Scanner Unit Plate	4
14	A232 1358	Lower Cover - Op Panel	1
15	A232 7232	Operation Panel Ass'y (LT)	1
15	A232 7632	Operation Panel Ass'y (A4)(TWN)	1
15	A232 7932	Operation Panel Ass'y (Asia)	1
16	AA10 0006	Nut - M3.6	2
17	A232 5835	Spring - Scanner Unit Plate	4
18	A232 1359	Seal - Lower Operation Cover	2
19	A153 6409	Decal - Key top Cover (NRG)	1
19	C225 2866	Decal - Key top Cover (REX)	1
19	C225 2867	Decal - Cover - Panel - Nashua	1

Index No.	Part No.	Description	Q'ty Per Assembly
101	0451 3008H	Tapping Screw - M3x8	
102	0802 5265	Tapping Screw - M3x6	
103	0451 3006B	Tapping Screw - M3x6	

2.EXTERIOR 2 (A230/A231/A232)

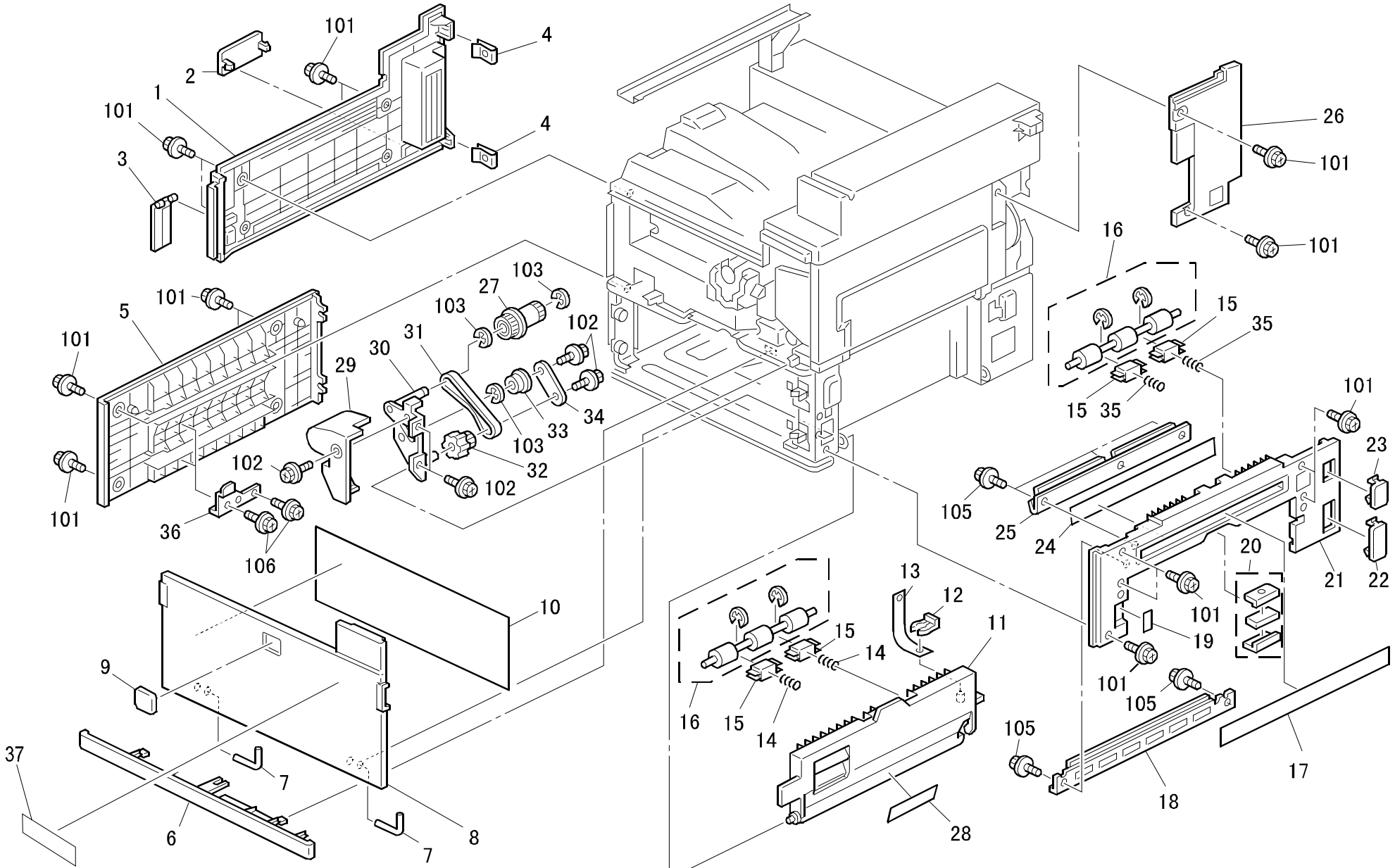

2.EXTERIOR 2 (A230/A231/A232)

Index No.	Part No.	Description	Q'ty Per Assembly
1	A232 7222	Left Cover (LT)	1
1	A232 7622	Left Cover (A4)	1
2	A176 1365	Cap - 38x77	1
3	A232 1282	Cap - Switch	1
4	A232 1284	Spring Holder	2
5	A232 1283	Left Cover - Paper Feed Sub-unit	1
6	A232 1268	Upper Cover - Paper Feed	1
7	G020 1332	Hinge - Front Cover	2
8	A232 1261	Front Cover (RIC/INF/LAN)	1
8	A232 7021	Front Cover (GES/SVN)	1
9	A134 1383	Emblem (RIC/LAN)	1
9	A232 7831	Support Cover (INF)	1
10	A232 1380	Jam Removal Sheet	1
11	A232 2876	Lower Cover - Vertical Transport	1
12	5206 2686	Snap Ring	1
13	A232 2863	Stopper Band	1
14	AA06 3564	Tension Spring	2
15	AA08 0228	Bushing - M4	4
16	A232 2862	Driven Roller	2
17	A232 2864	Seal - By-pass Feed	1
18	A232 2859	Lower Support Plate	1
19	AA00 1392	Decal - A1	1
20	AG07 0014	Magnet Catch	1
21	A230 2857	Cover - Vertical Transport (A230)	1
21	A232 2857	Cover - Vertical Transport (A231/A232)	1
22	A232 2867	Cap - 68x28	1
23	A232 2866	Cap - 44x26	1
24	A232 2860	Entrance Seal	1
25	A232 2858	Upper Support Plate	1
26	A230 1272	Right Rear Cover (A230)	1
26	A232 1272	Right Rear Cover (A231/A232)	1
27	AB03 0584	Timing Pulley - 15T	1
28	AA00 0204	Decal - Right Lower Cover	1
29	A232 2724	Knob Cover	1
30	A232 2720	Gear Bracket	1

Index No.	Part No.	Description	Q'ty Per Assembly
31	AA04 3416	Timing Belt - 40S3M192	1
32	A232 2722	Knob	1
33	AB03 0564	Pulley - M17	1
34	A232 2723	Support Plate - Knob	1
35	AA06 3563	Spring	2
36	A232 1286	Stopper - Plate	2
37	A232 7571	Model Name Plate (NST)	1
37	A232 7572	Model Name Plate (REX)	1
37	A232 7072	Model Name Plate (SVN)	1
37	A232 7071	Model Name Plate (GES)	1
101	0451 3008H	Tapping Screw - M3x8	
102	0451 3006B	Tapping Screw - M3x6	
103	0720 0060E	Retaining Ring - M6	
104	0720 0030E	Retaining Ring - M3	
105	0450 3008B	Tapping Screw - M3x8	
106	0450 3012B	Tapping Screw -3X12	

3.EXTERIOR 3 (A230/A231/A232)

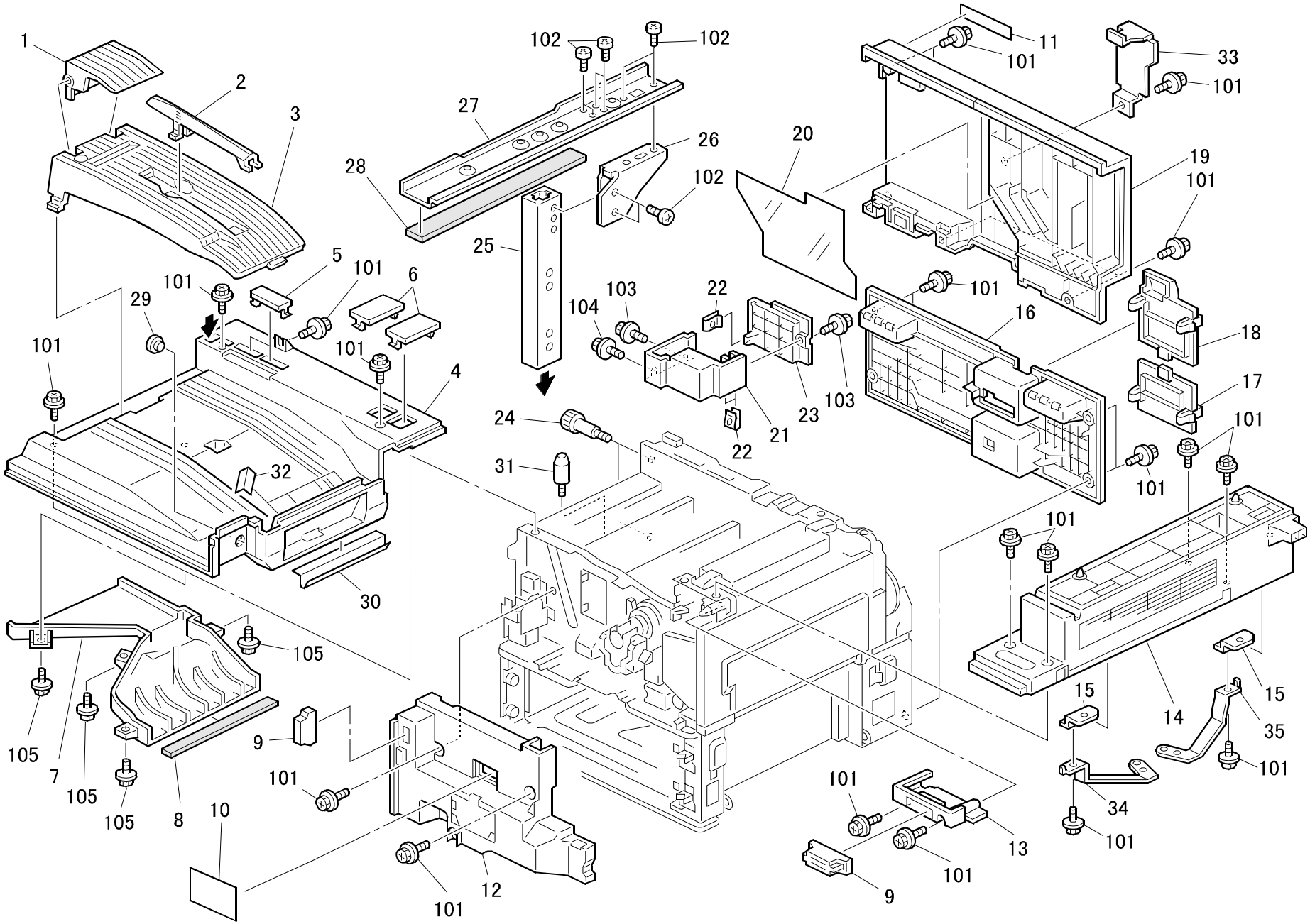

3.EXTERIOR 3 (A230/A231/A232)

Index No.	Part No.	Description	Q'ty Per Assembly
1	A232 4497	End Fence - Copy Tray	1
2	A232 4498	Copy Tray Guide	1
3	A232 4496	Sub Copy Tray	1
4	A232 7624	Upper Cover	1
5	A232 1258	Cap - IC Card	2
6	A176 1317	Cap - 34x55	2
7	A232 1252	Duct - Upper Cover	1
8	AA15 3390	Sponge - 202x3.5x4	1
9	AG07 1010	Magnet Catch	2
10	A232 1381	Decal - Total Counter	1
11	A233 7345	Decal - TEL/Line	1
12	A232 1375	Left Inner Cover	1
13	A232 1371	Inner Cover - Right Upper	1
14	A232 1092	Spacer - Scanner Unit (Basic Model)	1
14	A232 1093	Spacer (Duplex Model)	1
15	A232 1094	Nut	2
16	A232 7219	Lower Rear Cover	1
17	A232 1298	Lower Cap - Rear Cover	1
18	A232 1297	Upper Cap - Rear Cover	1
19	A232 1291	Rear Cover	1
19	A693 1292	Rear Cover - CSS	1
20	A232 1173	Sheet - Duct	1
21	A232 1342	Front Cover - Scanner Harness	1
22	A232 1284	Spring Holder	3
23	A232 1341	Rear Cover - Scanner Harness	1
24	AA14 3501	Stepped Screw - M8	2
25	A232 1096	Scanner Arm Unit	1
26	A232 1098	Support Plate - Scanner Arm	1
27	A232 1097	Guide Plate - Scanner Unit	1
28	AA15 3070	Dehumidifier Sheet	1
29	A232 1257	Cap - Upper Cover	1
30	AA15 0685	Seal - 215x10	1
31	AA14 3485	Pin - 5mm	1
32	A232 4499	Copy Tray Mylar	4
33	A693 1292	CSS Rear Cover	1

Index No.	Part No.	Description	Q'ty Per Assembly
34	A232 5836	Front Grounding Plate	1
35	A232 5837	Rear Grounding Plate	1
101	0451 3008H	Tapping Screw - M3x8	
102	0354 0080B	Screw - M4X8	
103	0451 3010H	Tapping Screw - 3x10	
104	0451 3014H	Tapping Screw - 3x14	
105	0450 3006B	Tapping Screw - M3x6	

4.PLATEN COVER (A381)

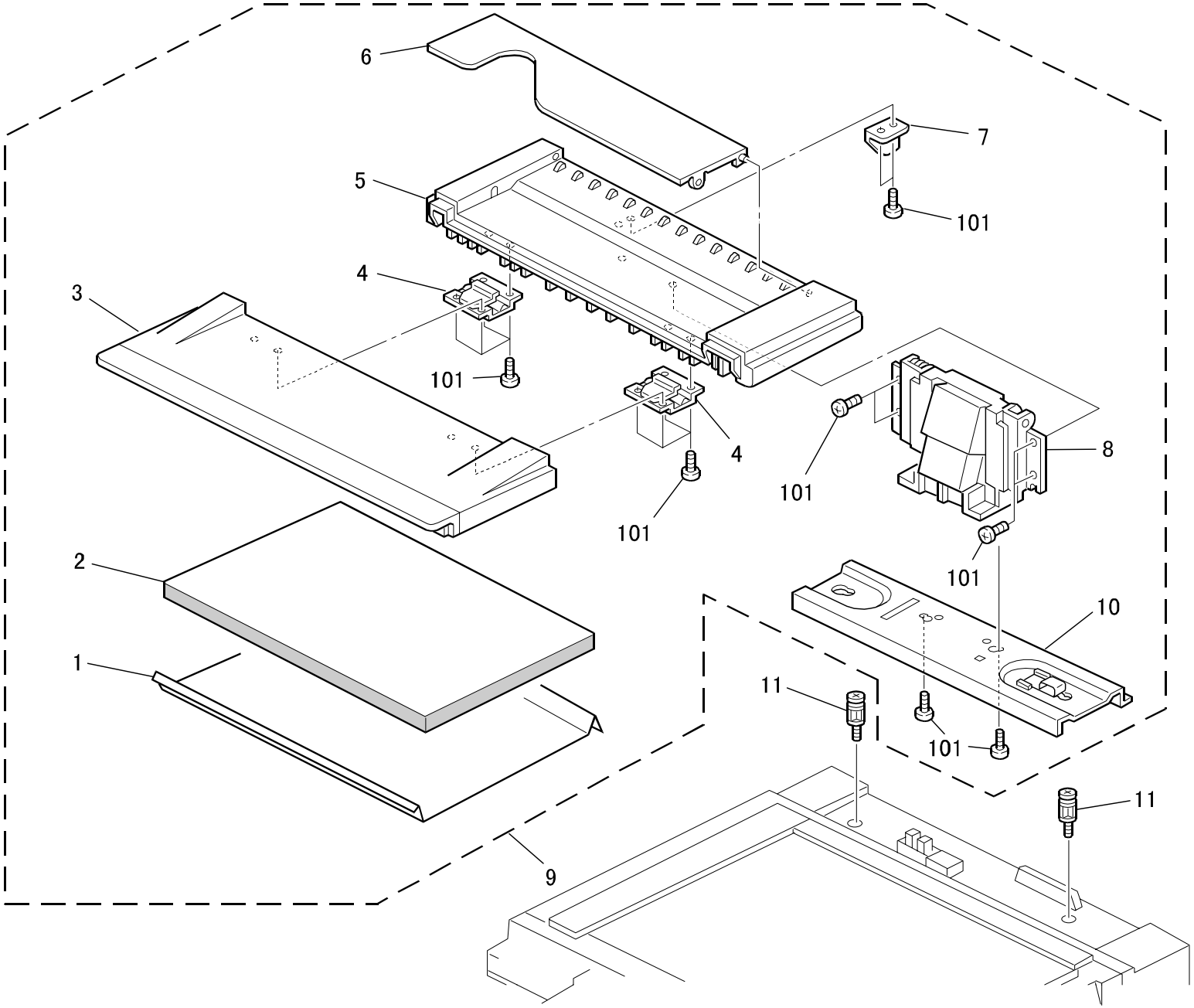

4.PLATEN COVER (A381)

Index No.	Part No.	Description	Q'ty Per Assembly
1	5448 2804	Platen Cover Sheet	1
2	AA16 2067	Platen Cover Pad	1
3	A134 1394	Front Platen Cover	1
4	A053 1957	Flex Hinge - Platen Cover	2
5	A134 1395	Rear Platen Cover	1
6	A134 1396	Original Holder	1
7	A153 1383	Platen Cover Feeler	1
8	A153 1370	Platen Cover Hinge	1
9	AC00 1060	Platen Cover Ass'y	1
10	A153 1380	Platen Cover Bracket	1
11	AA14 8447	Guide Pin - Platen Cover	2

Index No.	Part No.	Description	Q'ty Per Assembly
101	0414 0142B	Binding Self Tapping Screw - M4x4	

5.OPERATION PANEL ASS'Y (A230/A231/A232)

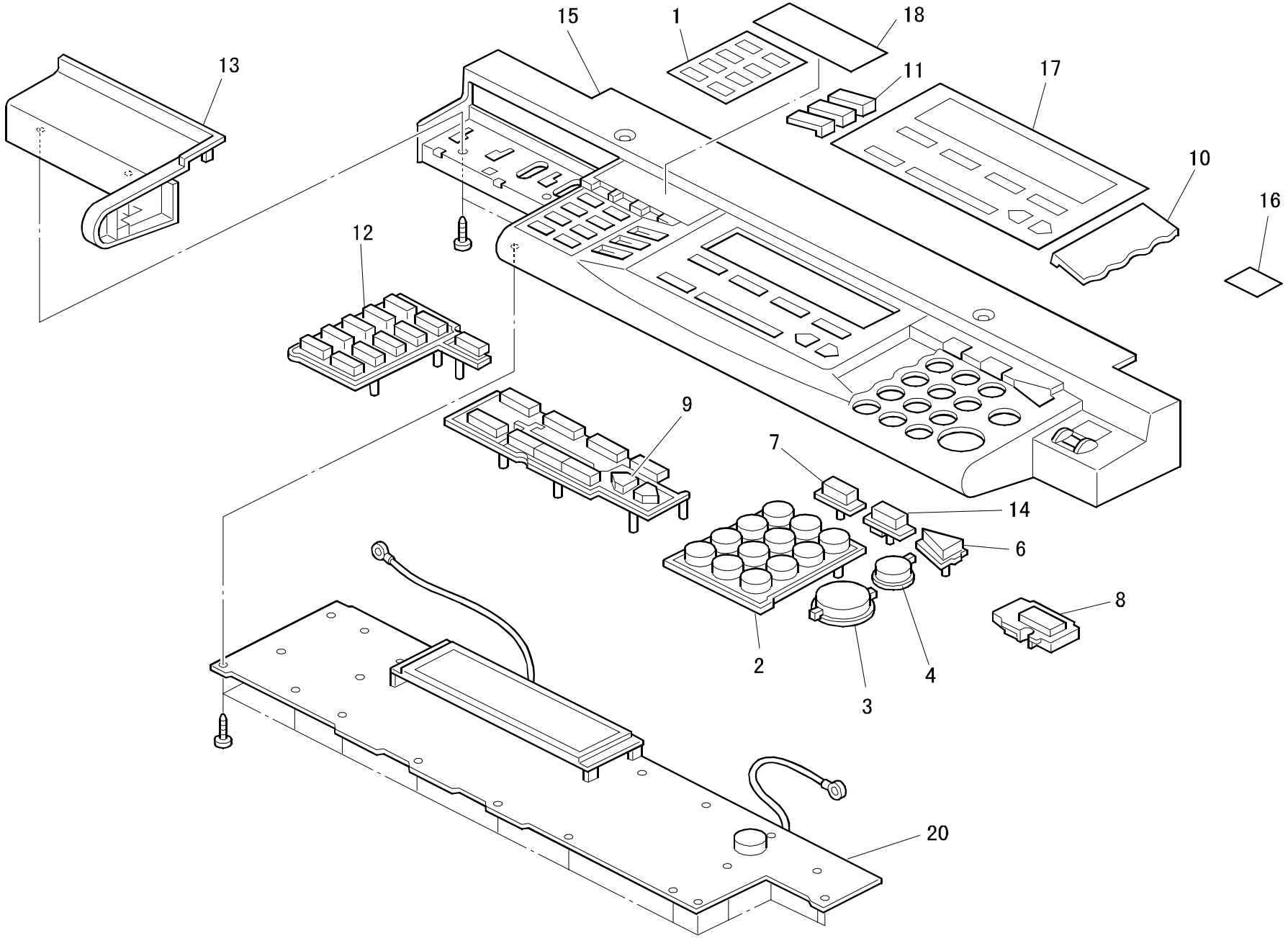

5.OPERATION PANEL ASS'Y (A230/A231/A232)

Index No.	Part No.	Description	Q'ty Per Assembly
*	A232 7232	Operation Panel Ass'y (LT)	1
*	A232 7632	Operation Panel Ass'y (A4)(TWN)	1
*	A232 7932	Operation Panel Ass'y (Asia)	1
1	A232 7237	Sheet - Image Edit (LT)(Asia)	1
1	A232 7637	Sheet - Image Edit (A4)(TWN)	1
2	A232 7239	Key Top - 10 Key (115V)	1
2	A232 1502	Key Top - 10 Key (230V)(TWN)	1
2	A232 7933	Key Top - 10 Key (Asia)	1
3	A232 1503	Key Top - Start	1
4	A232 1504	Key Top - Clear	1
6	A232 1505	Key Top - Inerrupt	1
7	A232 1507	Key Top - Program	1
8	A232 1508	Key Top - Switch	1
9	A232 1510	Key Top - Arrow	1
10	A232 1515	Cover - Basic	1
11	A232 1520	Cover - Copy/Fax	1
12	A232 1522	Key Top - Image Edit	1
13	A232 1532	Panel Case - Basic	1
14	A232 7238	Key Top - Clear Modes	1
15	A232 7233	Operation Panel Case (LT)(Asia)	1
15	A232 7633	Operation Panel Case (A4)(TWN)	1
16	A232 7234	Sheet - Switch (LT)(Asia)	1
16	A232 7634	Sheet - Switch (A4)(TWN)	1
17	A232 7235	Sheet - LCD (LT)(Asia)	1
17	A232 7635	Sheet - LCD (A4)(TWN)	1
18	A232 7236	Sheet - Option (LT)(Asia)	1
18	A232 7636	Sheet - Option (A4)(TWN)	1
19	5206 2684	Shoulder Screw - M3	1
20	A232 7639	Operatin Panel Board	1

Index No.	Part No.	Description	Q'ty Per Assembly

6.OPTICS UNIT 1 (A230/A231/A232)

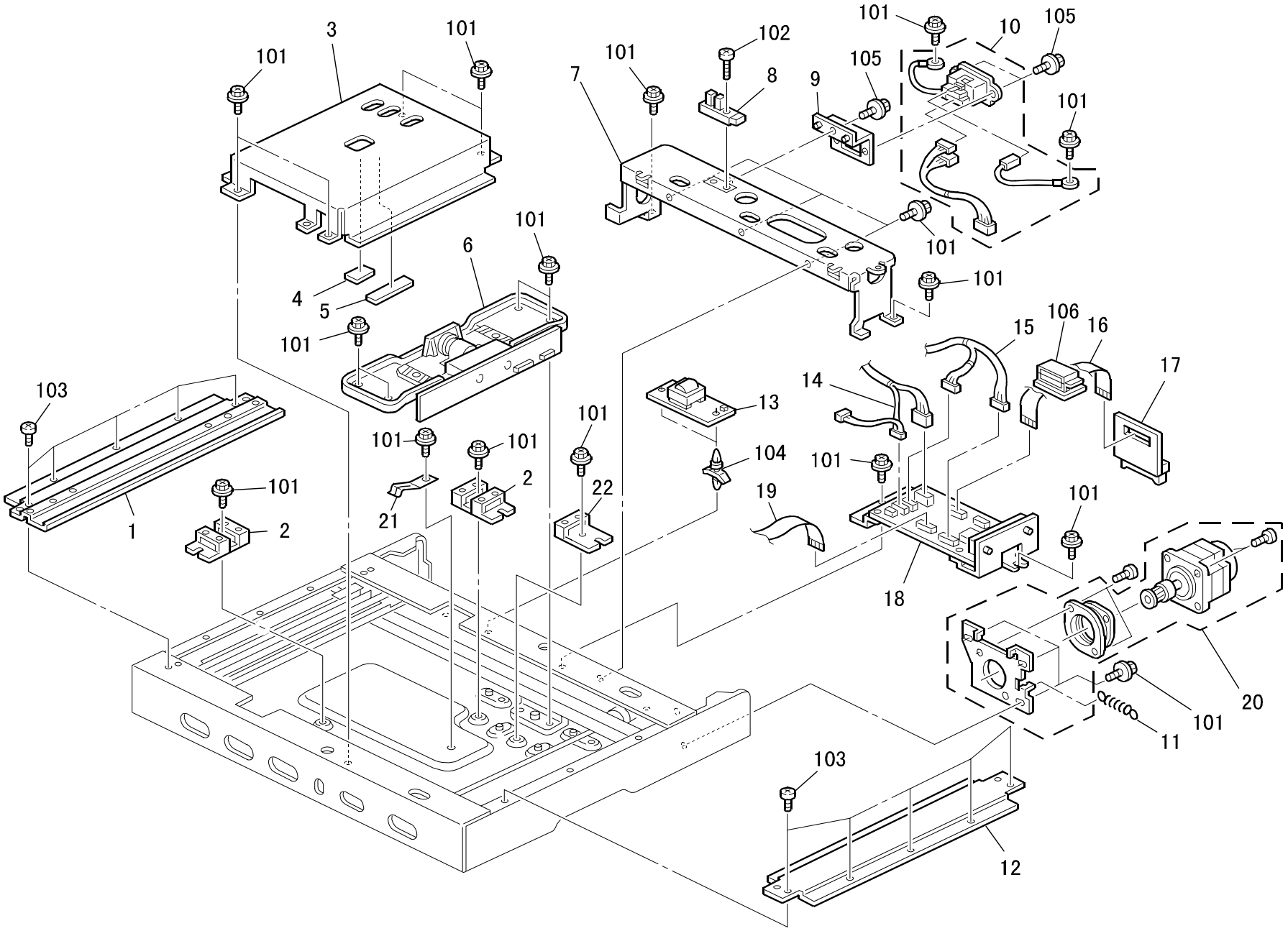

6.OPTICS UNIT 1 (A230/A231/A232)

Index No.	Part No.	Description	Q'ty Per Assembly
1	A232 1675	Bracket - Left Scale	1
2	AW01 0052	Original Sensor - H=2-62	2
3	A232 7252	Cover - Lens Block	1
4	A232 1681	Cushion - Lens Block	1
5	A232 1683	Spacer - Inner Cover	1
6	A233 1812	Lens Block Ass'y (A230/A231)	1
6	A232 1811	Lens Block Ass'y (A232)	1
7	A232 1738	Hinge Bracket	1
8	AW02 0100	Photointerruptor - P1CH2MM	1
9	A232 1836	Brancket - ADF I/F Harness	1
10	A232 5485	Harness - Scanner/ADF	1
11	AA06 0702	Tension Spring	1
12	A232 1682	Right Stay - Scanner Unit	1
13	AZ50 0052	Lamp Stabilizer	1
14	A232 5482	Scanner Rear Harness	1
15	A232 7355	Scanner Front Harness	1
16	A232 5492	Scanner Relay Harness	1
17	A232 5190	Scanner I/F Board	1
18	A233 1843	Scanner Control Board (A230/A231)	1
18	A232 1831	Scanner Control Board (A232)	1
19	A232 5491	SBU Harness	1
20	A232 1751	Scanner Motor - DC 7W	1
21	A232 1726	Spring Plate - Scanner Base	1
22	AW01 0053	Original Sensor - H=62	1

Index No.	Part No.	Description	Q'ty Per Assembly
101	0451 3006B	Tapping Screw - M3x6	
102	0314 0120B	Philips Pan Head Screw - M4x12	
103	0353 0060B	Philips Pan Head Screw - M3x6	
104	1105 0162	Locking Support	
105	0451 3008B	Tapping Screw - M3x8	
106	1607 0644	Ferrite Core - BCN-26	

7.OPTICS UNIT 2 (A230/A231/A232)

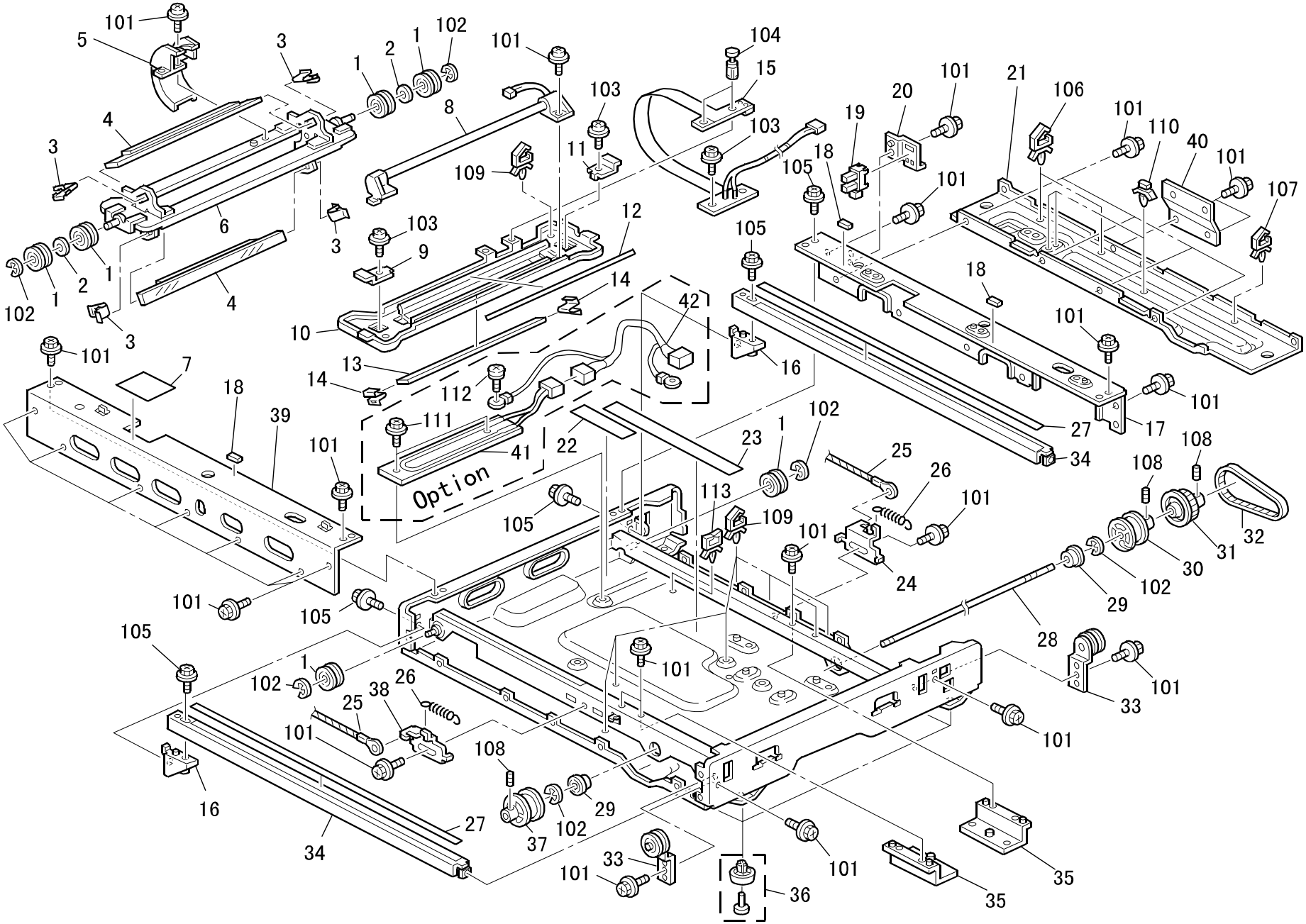

7.OPTICS UNIT 2 (A230/A231/A232)

Index No.	Part No.	Description	Q'ty Per Assembly
1	AB03 2060	Pulley - M22	6
2	AA13 2174	Spacer - M8	2
3	G404 2810	Spring Plate - Mirror - Second	4
4	A232 1799	2nd Mirror	2
5	A232 1808	Harness Guide	1
6	A232 1798	2nd Scanner Ass'y	1
7	AA15 0667	Seal - 50.5x60	1
8	AX50 0061	Exposure Lamp	1
9	A232 1791	Front Wire Holder	1
10	A232 1782	1st Scanner Ass'y	1
11	A232 1792	Rear Wire Holder	1
12	A232 1788	Reflector	1
13	AC03 0110	Scanner Mirror	1
14	A232 1789	1st Mirror Holder	2
15	A232 5495	Exposure Lamp Harness	1
16	A232 1728	Rail Supporter	2
17	A232 1736	Rear Scanner Frame	1
18	AA16 1133	Cushion - 4x15x1	3
19	AW02 0056	Photointerruptor - EE-SX4235A-P1	1
20	A232 1839	Bracket - Sensor	1
21	A232 1737	Rear Scanner Base	1
22	AA15 0668	Sheet - 100x21	1
23	AA15 0669	Sheet - 250x21	1
24	A232 1722	Rear Tension Plate - Scanner Wire	1
25	AA05 0103	Scanner Drive Wire	1
26	AA06 0703	Tension Spring	2
27	A232 1731	Scanner Rail	2
28	A232 1771	Scaner Drive Shaft	1
29	A232 3566	Ball Bearing - 8x16x5	2
30	AB03 2062	Rear Scanner Pulley	1
31	AB03 0572	Timing Pulley - Z61	1
32	AA04 3439	Timing Belt - S2M-224	1
33	A232 1710	Idler Pulley	2
34	A232 1732	Rail Bracket	2
35	A232 1713	Lens Block Supporter	2
36	AH01 0009	Rubber Pad - H5	4
37	AB03 2061	Front Scanner Pulley	1
38	A232 1712	Front Tension Plate - Scanner Wire	1
39	A232 1735	Front Scanner Frame	1
40	A232 1739	Shiled Plate - Sib	1
41	AX40 0117	Heater - 120V 15W	1
41	AX40 0118	Heater - 240V 15W	1
42	A232 5715	AC Connector Harness (Option)	1
101	0451 3006B	Tapping Screw - M3x6	
102	0720 0060E	Retaining Ring - M6	
103	0951 3006B	Philips Screw With Flat Washer - M3x6	
104	1005 0728	Rivet - NRP335	
105	0450 3008B	Tapping Screw - M3x8	
106	1105 0292	Wire Saddle	
107	1105 0310	Harness Clamp - LWS-1S	
108	0575 0050E	Hexagon Headless Set Screw - M5x5	
109	1105 0460	Clamp	
110	1105 0409	Spacer	
111	0314 0060B	Philips Pan Head Screw - M4x6	
112	0957 3006Z	Screw - M3x6	
113	1105 0460	Clamp	

8.LASER UNIT (A230/A231/A232)

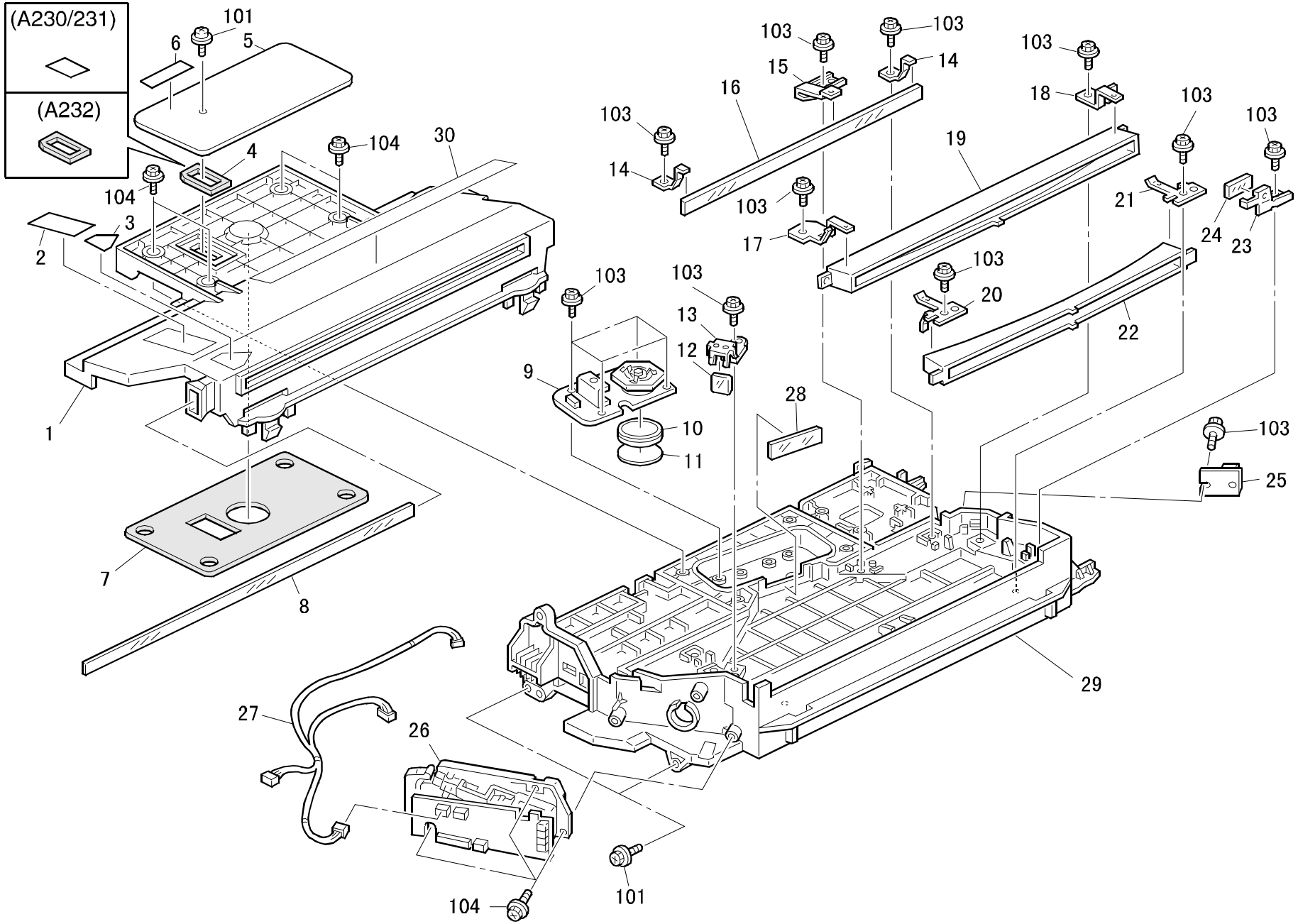

8.LASER UNIT (A230/A231/A232)

Index No.	Part No.	Description	Q'ty Per Assembly
1	A232 1903	Laser Unit Cover	1
2	G020 1920	Decal - Laser Diode (LT)	1
2	G020 1918	Decal - Laser Diode (A4)	1
3	G020 1917	Decal - LD	1
4	A232 1904	Cap - Laser Unit Cover (A230/A231)	1
4	AA15 2405	Decal - Heatsink (A232)	1
5	A232 1917	Heatsink Laser Unit	1
6	A193 7425	Decal - High Temperature	1
7	AA15 2403	Sponge - Laser Unit Cover	1
8	AC01 5025	Shield Glass	1
9	AX06 0141	Polygon Mirror Motor (A230/A231)	1
9	AX06 0143	Polygon Mirror Motor (A232)	1
10	A232 1918	Heatsink - Polygon Motor	1
11	A232 1920	Decal - Heatsink	1
12	G020 1966	Cylindrical Lens	1
13	A232 1927	Cylindrical Lens Holder	1
14	A232 1926	Mirror Holder	2
15	A232 1925	Middle Mirror Holder	1
16	AC03 0115	Mirror	1
17	A232 1923	Front Holder - BTL	1
18	A232 1924	Rear Holder - BTL	1
19	G020 1969	BTL Lens	1
20	A232 1921	Front Holder - F Theta Mirror	1
21	A232 1922	Rear Holder - F Thera Mirror	1
22	G020 1968	F Theta Mirror	1
23	A232 1928	Holder - Sync. Detector Mirror	1
24	GC03 0020	Sync. Detector Mirror	1
25	A232 5310	Laser Sync. Detector	1
26	A230 1891	LD Unit (A230/A231)	1
26	A232 1891	LD Unit (A232)	1
27	A232 5445	Harness - Laser Unit (A230/A231)	1
27	A232 5444	Harness - Laser Unit (A232)	1
28	AC01 5024	Shield Glass - Polygon Motor	1
29	A232 1900	Housing - Laser Unit	1
30	A232 1971	Support Cover - Imaging Unit	1

Index No.	Part No.	Description	Q'ty Per Assembly
101	0951 3008B	Philips Screw With Flat Washer - M3x8	
102	0451 3010B	Tapping Screw - M3x10	
103	0450 3008B	Tapping Screw - M3x8	
104	0450 3010B	Tapping Screw - M3x10	

9.BY-PASS FEED UNIT 1 (A689)

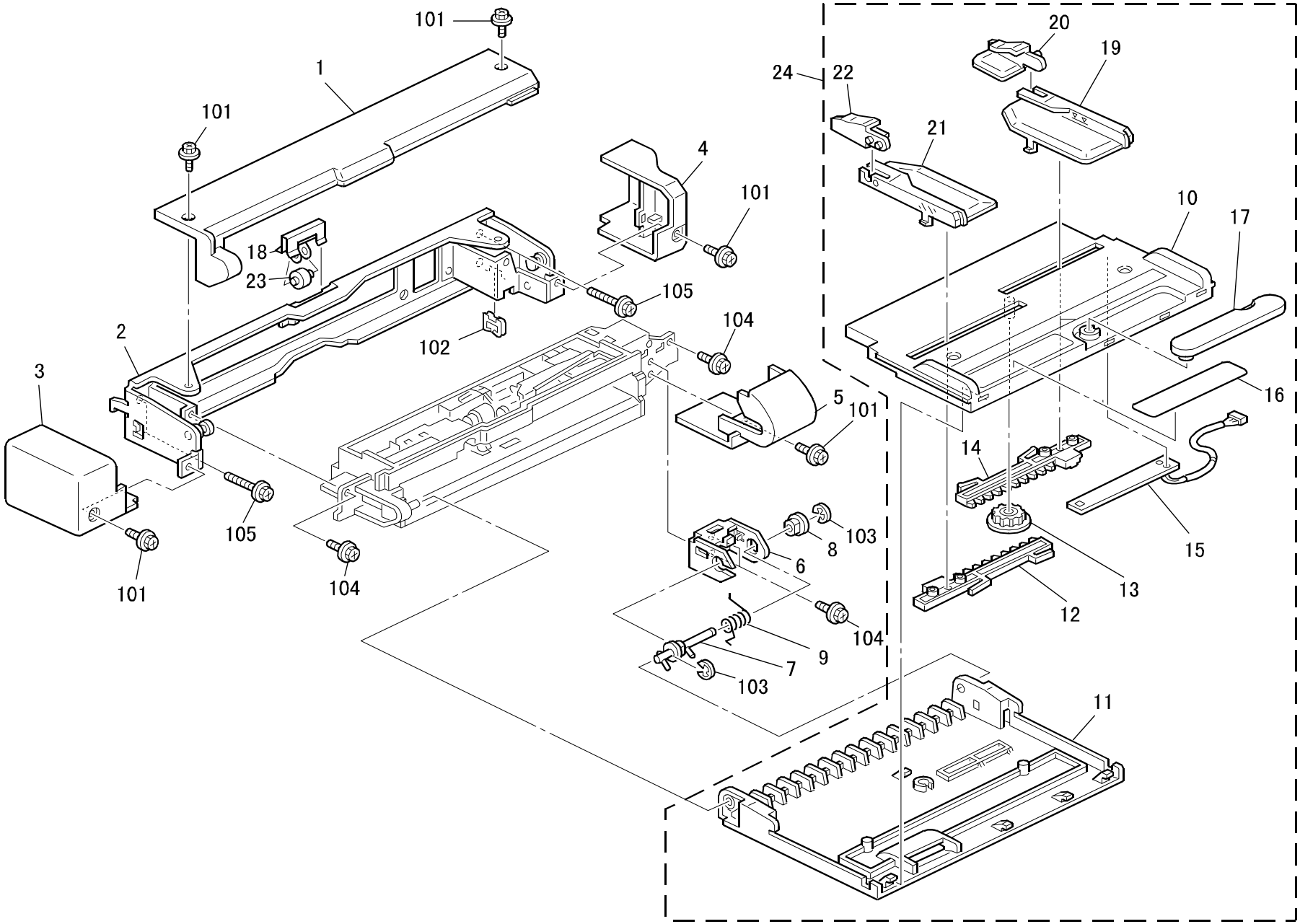

9.BY-PASS FEED UNIT 1 (A689)

Index No.	Part No.	Description	Q'ty Per Assembly
1	A232 6106	Middle Lower Cover	1
2	A232 6095	Frame By-pass Unit Holder	1
3	A232 6109	Front Cover - By-pass Unit	1
4	A232 6108	Rear Cover - By-pass Unit	1
5	A232 6107	Middle Upper Cover	1
6	A232 6090	Bracket Positioning Pin	1
7	A232 6091	Positioning Pin	1
8	AA08 2070	Bushing - 8x16x7	1
9	AA06 6574	Torsion Spring	1
10	A232 6067	By - Pass Feed Table	1
11	A232 6068	Cover By-pass Table	1
12	A232 6082	Front Rack	1
13	G011 3305	Gear - 16T	1
14	A232 6083	Rear Rack	1
15	A232 6080	Paper Size Detector	1
16	A232 6073	Decal - By-pass Feed	1
17	A232 6085	Guide By - Pass Table	1
18	A232 6092	Roller - Holder	1
19	A232 6070	Rear Side Fence	1
20	A232 6072	Sub - Rear Fence	1
21	A232 6069	Front Side Fence	1
22	A232 6071	Sub - Front Fence	1
23	AF04 0559	Driven Roller - M9	1
24	A232 6009	By-pass Feed Table Ass'y	1

Index No.	Part No.	Description	Q'ty Per Assembly
101	0451 3008H	Tapping Screw - M3x8	
102	1105 0349	Edge Saddle	
103	0720 0060E	Retaining Ring - M6	
104	0451 3008B	Tapping Screw - M3x8	
105	0451 4010B	Tapping Screw - 4x10	

10.BY-PASS FEED UNIT 2 (A689)

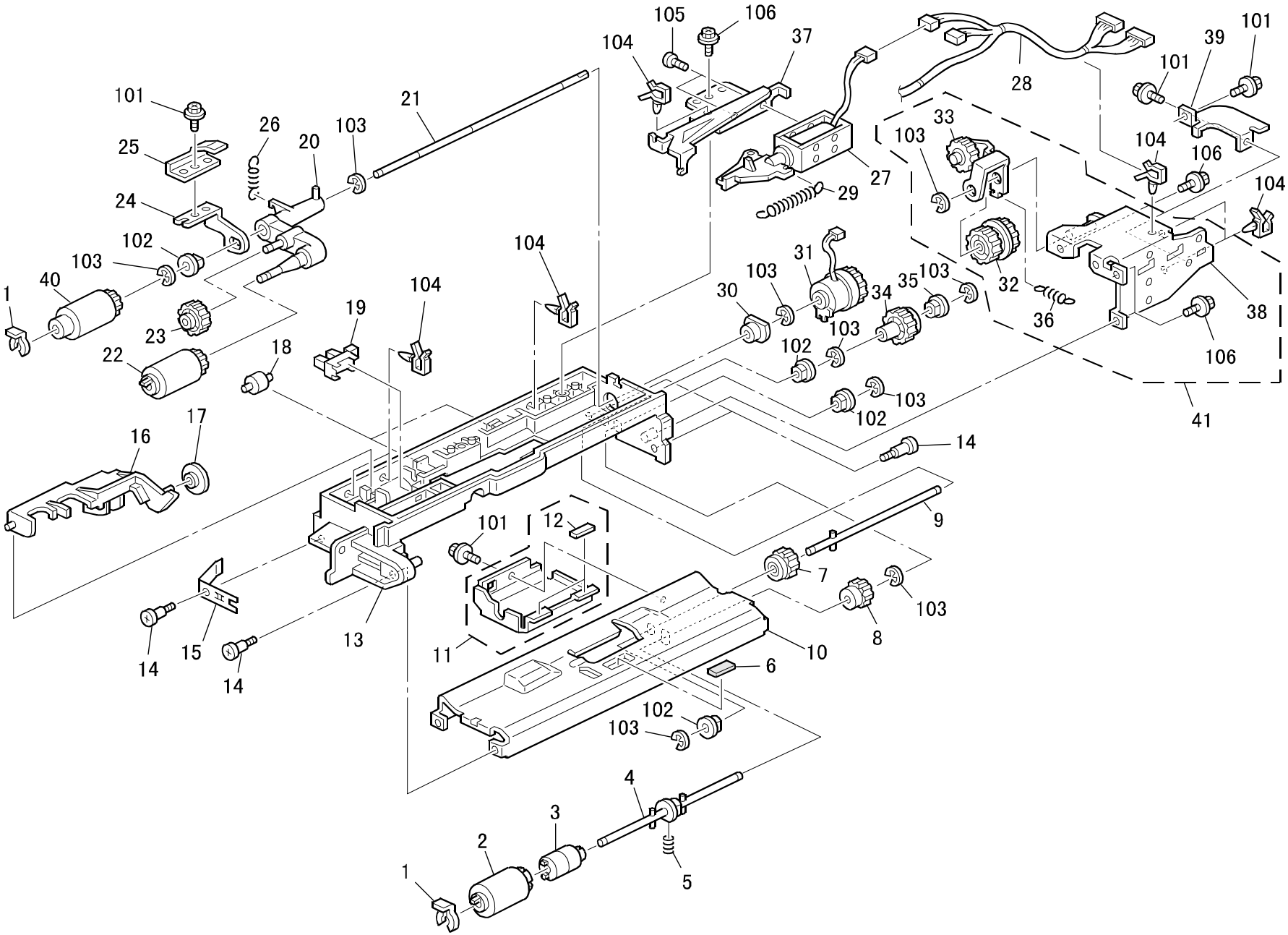

10.BY-PASS FEED UNIT 2 (A689)

Index No.	Part No.	Description	Q'ty Per Assembly
1	5447 2681	Snap Ring	2
2	**AF03 2036**	**Separation Roller**	**1**
3	A232 2783	Terque Limiter	1
4	A232 6033	Shaft Driven Roller	1
5	AA06 3499	Pressure Spring	1
6	AF01 3016	Bottom Plate Pad	1
7	AB01 1389	Gear - 20Z	1
8	AB01 1388	Gear - Z16	1
9	A232 6035	Shaft - Drive Roller	1
10	A232 6028	Guide Plate Paper Separator	1
11	A232 6038	Gear Cover	1
12	A134 2843	Spacer - 6x30x1.5	2
13	A232 6022	Housing - By-pass Feed	1
14	5216 4198	Stepped Screw - Guide Plate	4
15	A232 6023	Grounding Plate - Reverse	1
16	A232 6055	Paper End Feeler	1
17	A134 2661	Feeler Roller	1
18	AF04 0031	Driven Roller	2
19	AW02 0056	Photointerruptor - EE-SX4235A-P1	1
20	A232 6043	Arm Paper Pick Up	1
21	AA14 0660	Feed Shaft	1
22	**AF03 0036**	**Pick Up Roller**	**1**
23	AB01 1387	Gear - 23Z	1
24	A232 6044	Support Plate	1
25	A232 6046	Grounding Plate - Feed	1
26	AA06 3568	Pressure Spring	1
27	A232 6051	Pickup Solenoid	1
28	A232 5427	Harness By-pass Feed	1
29	AA06 3567	Tensior Spring	1
30	AA08 3010	Clutch Roller - 6x14x10	1
31	AX20 0140	Electrical Cluthc	1
32	AB01 7454	Gear - 24Z/30Z	1
33	A232 6059	Arm Tightener	1
34	AB01 1390	Gear - 27Z	1
35	GA08 0002	Bushing - 6mm	1

Index No.	Part No.	Description	Q'ty Per Assembly
36	AA06 3569	Spring	1
37	A232 6049	Solenoid Bracket	1
38	A232 6061	Tightener Bracket	1
39	A232 6065	Rail - By-pass Feed	1
40	**AF03 1036**	**Feed Roller**	**1**
41	A232 6057	Bracket-by-pass Feed Drive	1
101	0451 3008B	Tapping Screw - M3x8	
102	0805 3480	Bushing - 6mm	
103	0720 0040E	Retaining Ring - M4	
104	1105 0267	Harness Clamp - YMC-10-0	
105	0353 0040B	Screw - M3X4	
106	0450 3008B	Tapping Screw - M3x8	

11.PAPER FEED SECTION (A230/A231/A232)

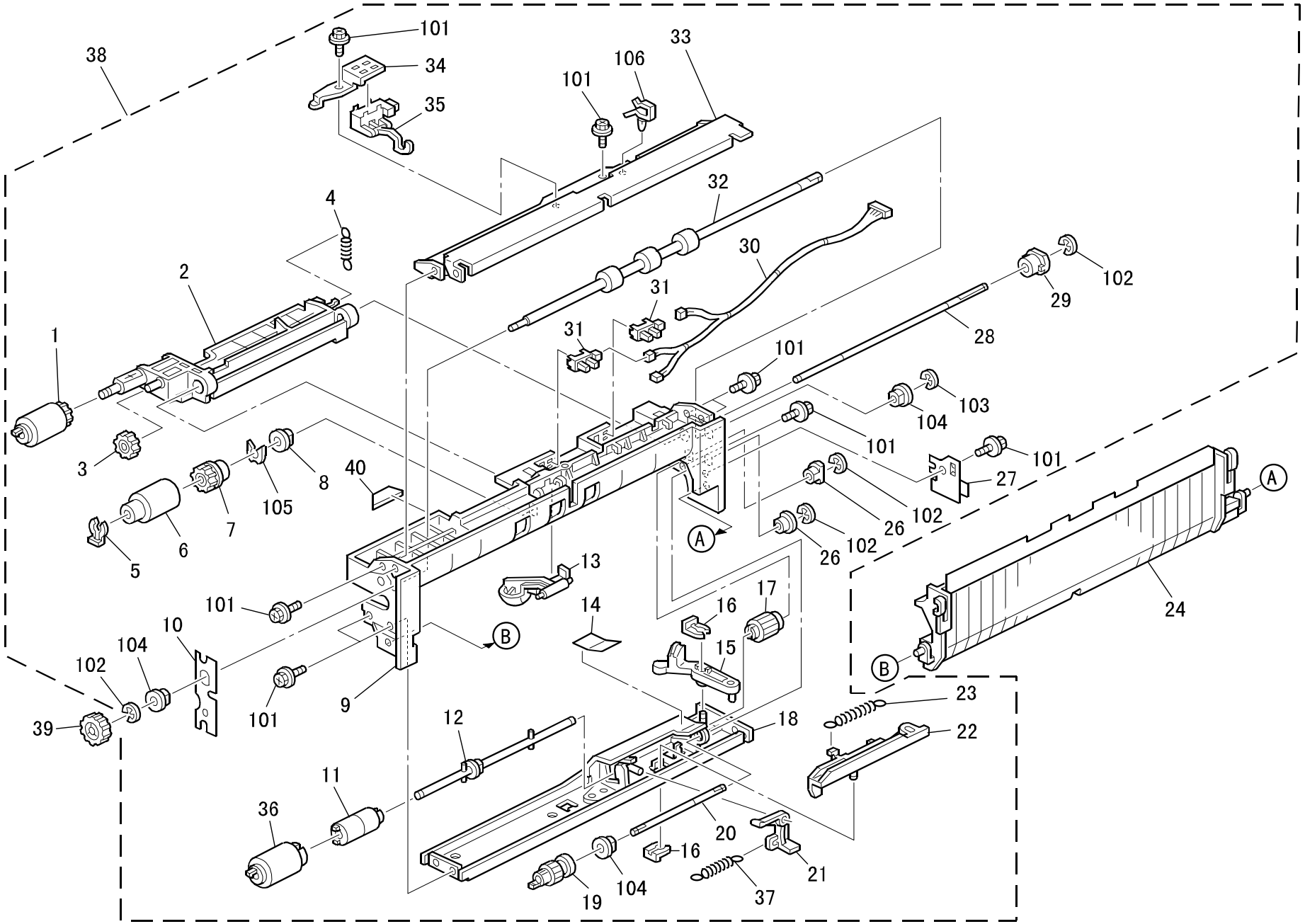

11.PAPER FEED SECTION (A230/A231/A232)

Index No.	Part No.	Description	Q'ty Per Assembly
1	**AF03 0035**	**Pick-up Roller**	**1**
2	A232 2763	Pick-up Arm	1
3	AB01 1188	Gear - 21Z	1
4	AA06 0691	Tension Spring	1
5	5447 2681	Snap Ring	1
6	**AF03 1035**	**Feed Roller**	**1**
7	AB01 1189	Gear - 18Z	1
8	AA08 2070	Bushing - 8x16x7	1
9	A232 2760	Housing - Paper Feed Unit	1
10	A232 2765	Front Grounding Plate	1
11	A232 2783	Torque Limiter	1
12	A232 2777	Shaft - Paper Separation	1
13	A232 2762	Paper End Peeler	1
14	A232 2782	Rear Feed Mylar	1
15	A232 2776	Release Lever	1
16	5206 2686	Snap Ring	2
17	AB01 0107	Gear - 23Z	1
18	A232 2770	Stay - Paper Separation	1
19	AB01 0106	Gear - 24Z	1
20	AA14 0656	Shaft - Gear	1
21	A232 2774	Pressure Lever	1
22	A232 2775	Link Lever	1
23	AA06 0692	Tension Spring	1
24	A232 2785	Vertical Guide	1
26	AA08 2072	Bushing - M6	2
27	A232 2764	Rear Grounding Plate	1
28	AA14 0655	Shaft - Paper Feed	1
29	AA08 3014	One-way Clutch	1
30	A232 5428	Harness - Paper Feed Unit	1
31	AW02 0056	Photointerruptor - EE-SX4235A-P1	2
32	AF02 0404	Transport Roller	1
33	A232 2780	Stay - Paper Feed	1
34	A232 2781	Sensor Bracket	1
35	AW02 0096	Photointerruptor	1
36	**AF03 2035**	**Separation Roller**	**1**

Index No.	Part No.	Description	Q'ty Per Assembly
37	AA06 0693	Tension Spring	1
38	A232 2750	Paper Feed Unit Ass'y	1
39	AB01 4090	Gear - 18Z	1
40	A232 2766	Feed Mylar	1
101	0451 3008B	Tapping Screw - M3x8	
102	0720 0040E	Retaining Ring - M4	
103	0720 0060E	Retaining Ring - M6	
104	0805 3480	Bushing - 6mm	
105	0805 0089	Retaining Ring - M4	
106	1105 0283	Clamp	

12.PAPER REGISTRATION (A230/A231/A232)

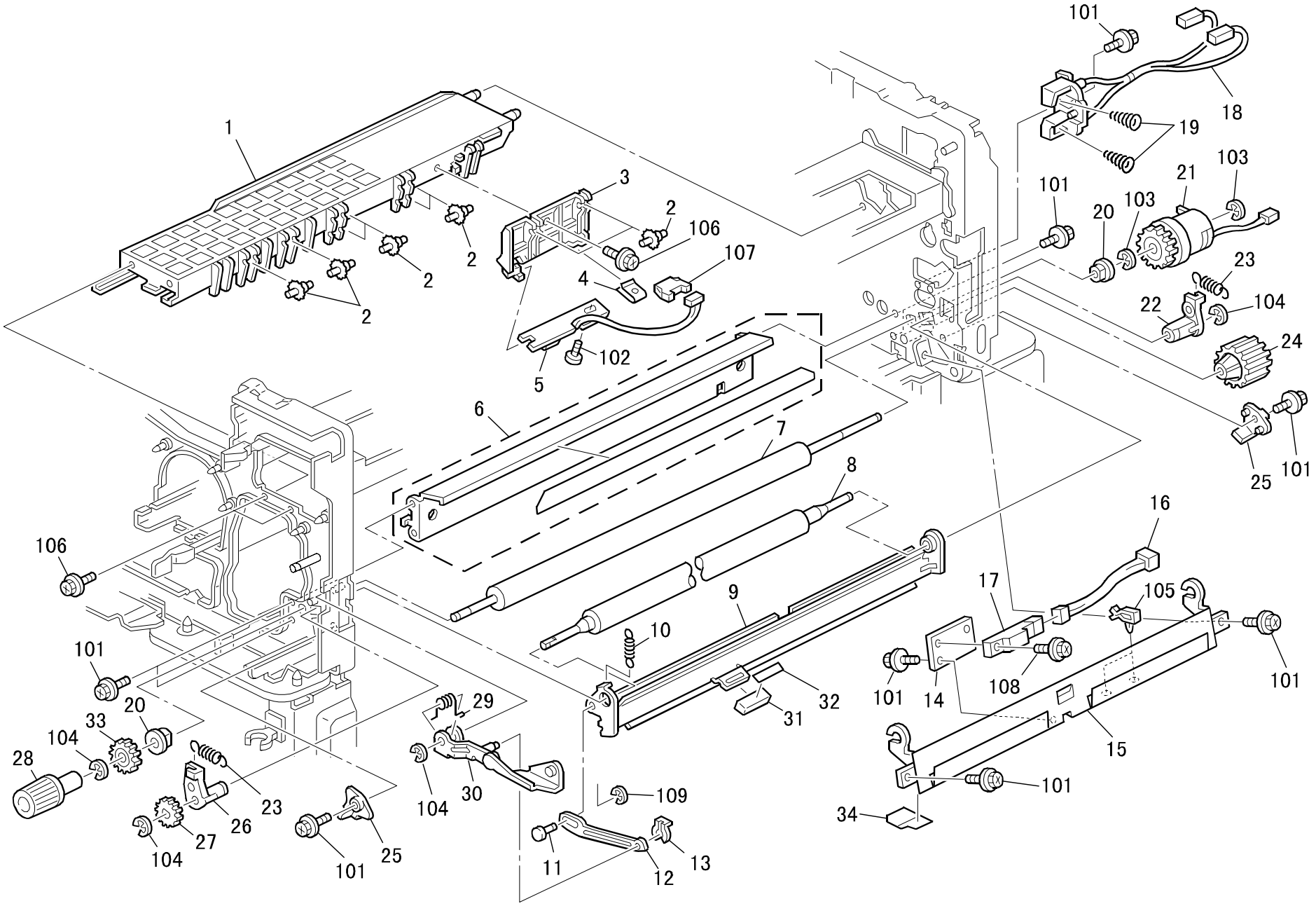

12.PAPER REGISTRATION (A230/A231/A232)

Index No.	Part No.	Description	Q'ty Per Assembly
1	A232 2365	Guide Rail - PCU	1
2	A232 2374	Spur	10
3	A232 2366	Holder - ID Sensor	1
4	A232 1284	Spring Holder	1
5	A232 2367	ID Sensor	1
6	A232 1072	Lower Stay - PCU	1
7	AF02 0410	Registration Roller	1
8	AF02 1059	Driven Registration Roller	1
9	A232 2574	Upper Entrance Guide	1
10	AA06 2305	Tension Spring	1
11	AA14 9291	Pin - Link	1
12	A232 2596	Link Lever	1
13	5206 2686	Snap Ring	1
14	A232 2594	Bracket - Registration Sensor	1
15	A232 2583	Lower Entrance Guide	1
16	A232 5420	Harness - Registration Sensor	1
17	AW01 0048	Photo Sensor - Gp2a28n1	1
18	AD02 1127	Receptacle	1
19	AA06 3304	Terminal Spring	2
20	AA08 2080	Bushing - M8	2
21	AX20 0138	Electrical Clutch	1
22	AA08 0230	Rear Busing - M6	1
23	AA06 2304	Pressure Spring	2
24	AB01 4047	Gear - 29Z	1
25	A232 2578	Stopper - Guide Plate	2
26	AA08 0229	Front Busing - M6	1
27	AB01 4051	Gear - 16Z	1
28	AG05 0085	Registration Roller Knob	1
29	AA06 6577	Torsion Spring	1
30	A232 3985	Link - Cover	1
31	G010 3039	Knob - Entrance Guide	1
32	AA00 1393	Decal - A2	1
33	AB01 3485	Gear - 20Z	1
34	A232 3198	Mylar - Regist Guide Plate	1

Index No.	Part No.	Description	Q'ty Per Assembly
101	0451 3006B	Tapping Screw - M3x6	
102	0353 0060B	Philips Pan Head Screw - M3x6	
103	0720 0060E	Retaining Ring - M6	
104	0720 0040E	Retaining Ring - M4	
105	1105 0283	Clamp	
106	0450 3008B	Tapping Screw - M3x8	
107	1102 6246	Relay Connector - 4P	
108	0313 0060B	Philips Pan Head Screw - M3x6	
109	0720 0020E	Retaining Ring - M2	

13.PAPER TRAY UNIT (A230/A231/A232)

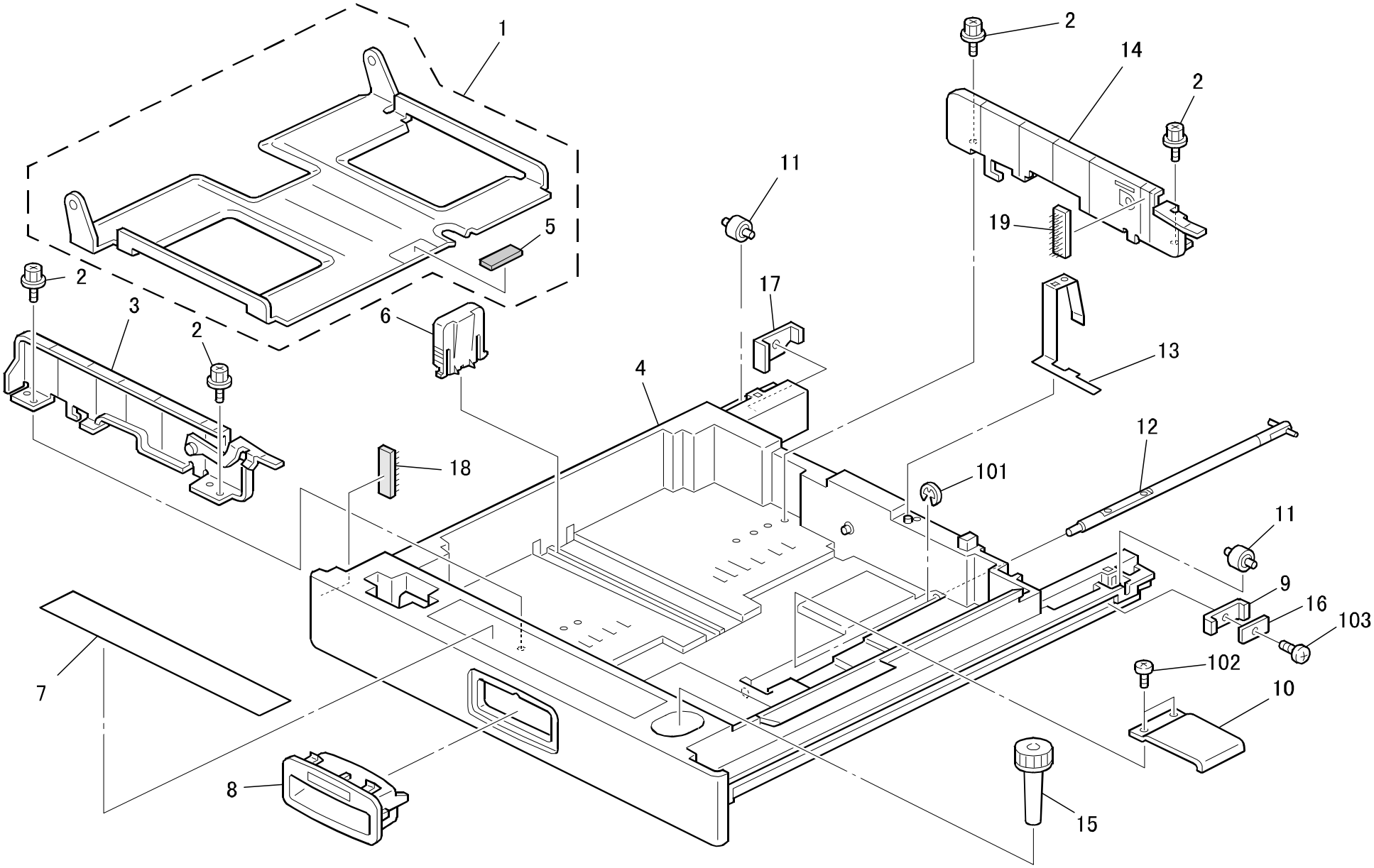

13.PAPER TRAY UNIT (A230/A231/A232)

Index No.	Part No.	Description	Q'ty Per Assembly
1	A232 2977	Bottom Plate	1
2	A232 2986	Screw - M4X8	4
3	A232 2979	Front Side Fence	1
4	AF00 2005	Paper Tray	1
5	AF01 3014	Bottom Plate Pad	1
6	AF01 7020	End Fence	1
7	AA00 3002	Decal - Add Paper	1
8	A232 2988	Handle - Paper Tray	1
9	A232 2997	Right Stopper - Paper Tray	1
10	A232 2975	Bottom Lift Plate	1
11	A232 2987	Roller - Paper Tray	2
12	A232 2972	Bottom Lift Shaft	1
13	A232 2976	Grounding Plate - Paper Tray	1
14	A232 2983	Rear Side Fence	1
15	A232 2989	Screw Holder	1
16	A232 2999	Right Spacer	1
17	A232 2978	Left Shoe	1
18	A232 2969	Tray Cushion	1
19	A096 6554	Side Fence Pad	1
			

Index No.	Part No.	Description	Q'ty Per Assembly
101	0720 0060E	Retaining Ring - M6	
102	0353 0060B	Philips Pan Head Screw - M3x6	
103	0452 3010B	Tapping Bind Screw - M3x10	

14.TONER HOPPER UNIT (A230/A231/A232)

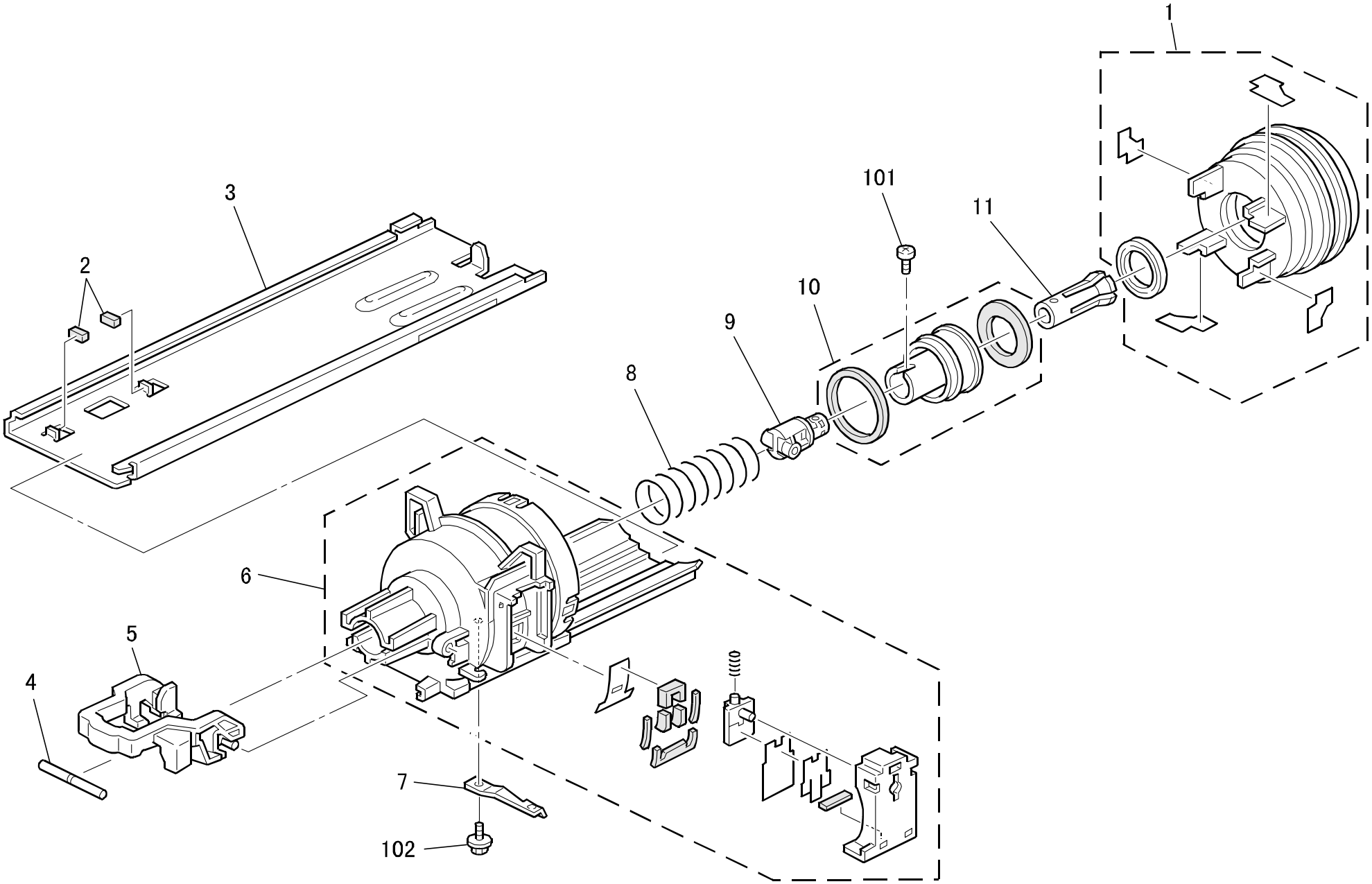

14.TONER HOPPER UNIT (A230/A231/A232)

Index No.	Part No.	Description	Q'ty Per Assembly
1	A232 7663	Cover - Toner Supply Unit (RIC EU)	1
1	A232 7263	Cover - Toner Supply Unit (RIC NA)	1
1	A232 7463	Cover - Toner Supply Unit (OEM)	1
2	A232 3266	Seal - Slide Rail	2
3	A232 3262	Slide Rail - Toner Supply	1
4	AA14 5810	Slide Shaft	1
5	A232 3261	Handle - Toner Supply	1
6	A232 3230	Case - Toner Supply Ass'y	1
7	A232 3263	Spring Plate - Toner Bottle	1
8	AA06 3566	Pressure Spring	1
9	A232 3251	Chuck Shaft	1
10	A232 3252	Slider Ass'y	1
11	A134 3180	Bottle Chuck	1

Index No.	Part No.	Description	Q'ty Per Assembly
101	0452 3010B	Tapping Bind Screw - M3x10	
102	0450 3008B	Tapping Screw - M3x8	

15.PCU UNIT 1 (A230/A231/A232)

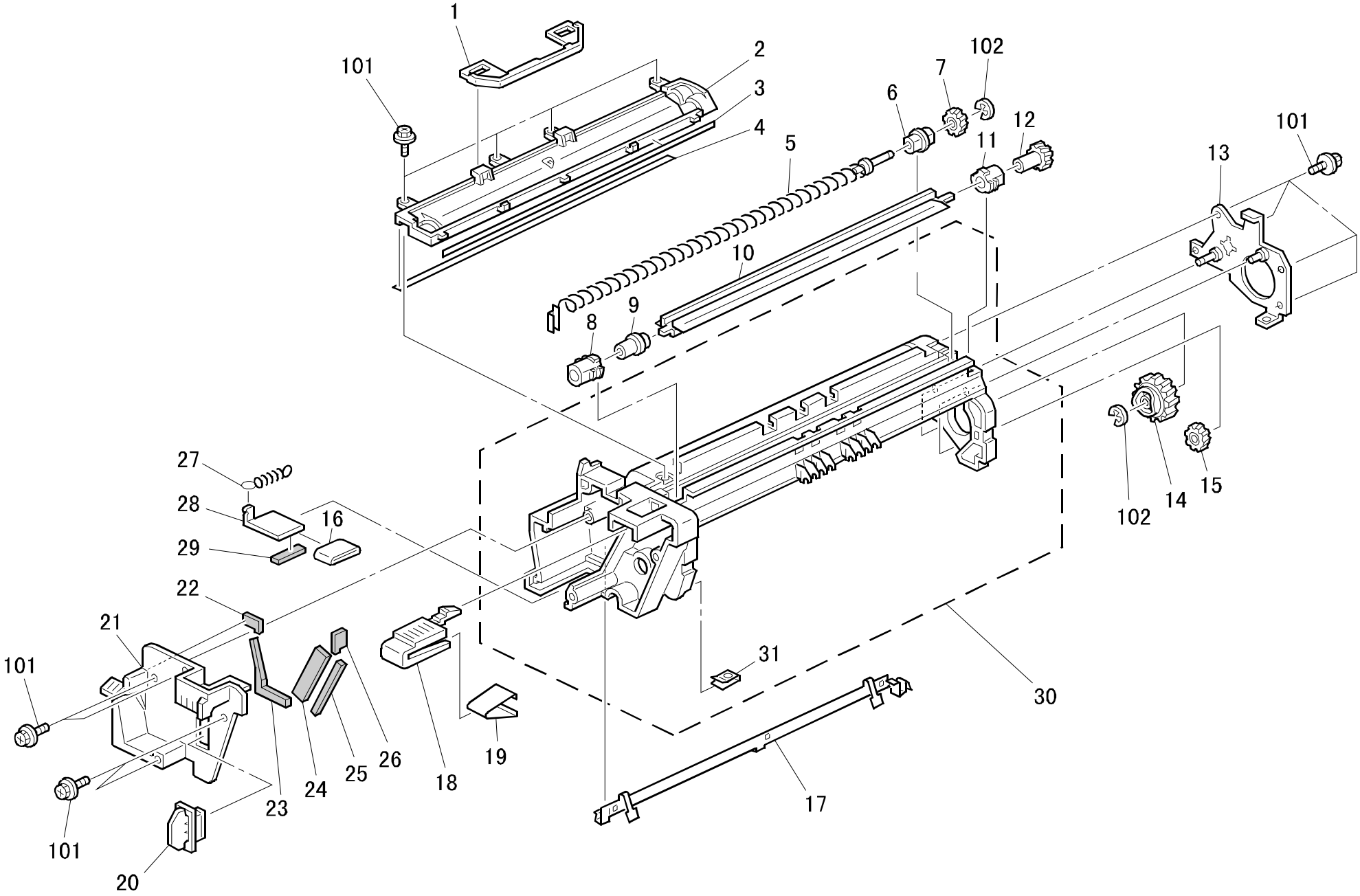

15.PCU UNIT 1 (A230/A231/A232)

Index No.	Part No.	Description	Q'ty Per Assembly
1	A232 2293	Handle - PCU	1
2	A232 2281	Cover - Cleaning Unit	1
3	A232 2420	Right Seal - Cleaning Cover	1
4	A232 2419	Left Seal - Cleaning Cover	1
5	AD04 3050	Toner Collection Coil	1
6	A232 2292	Bushing - Toner Collection Coil	1
7	AB01 1377	Gear - 14Z	1
8	A232 2289	Front Bushing - Collection Mylar	1
9	A232 2288	Shaft - Toner Collection Mylar	1
10	AD04 4000	Toner Collection Mylar	1
11	A232 2290	Bushing - Collection Mylar	1
12	AB01 1378	Gear - 19Z	1
13	A232 2294	Idler Bracket	1
14	AB01 1380	Cam - Cleaning Blade	1
15	AB01 1379	Gear - 19Z	1
16	A232 2322	Shield - Shutter - Toner Supply	1
17	A232 2403	Receptacle - Charge Roller	1
18	A232 2329	Stopper - PCU	1
19	A232 2408	Spring Plate	1
20	A232 2328	Cap - Toner Supply	1
21	A232 2323	Front Cover - PCU	1
22	A232 2417	Seal - 1x7x12.5	1
23	A232 2413	Seal - Front Lower	1
24	A232 2414	Seal - 2x20x45	1
25	A232 2416	Seal - 1x3x80	1
26	A232 2412	Seal - 2x7x14.5	1
27	AA06 2303	Tension Spring	1
28	A232 2321	Shutter - Toner Supply	1
29	A232 2418	Seal - Shutter	1
30	A232 7365	Upper Frame - PCU	1
31	A232 1284	Spring Holder	1

Index No.	Part No.	Description	Q'ty Per Assembly
101	0450 3008B	Tapping Screw - M3x8	
102	0720 0040E	Retaining Ring - M4	

16.PCU UNIT 2 (A230/A231/A232)

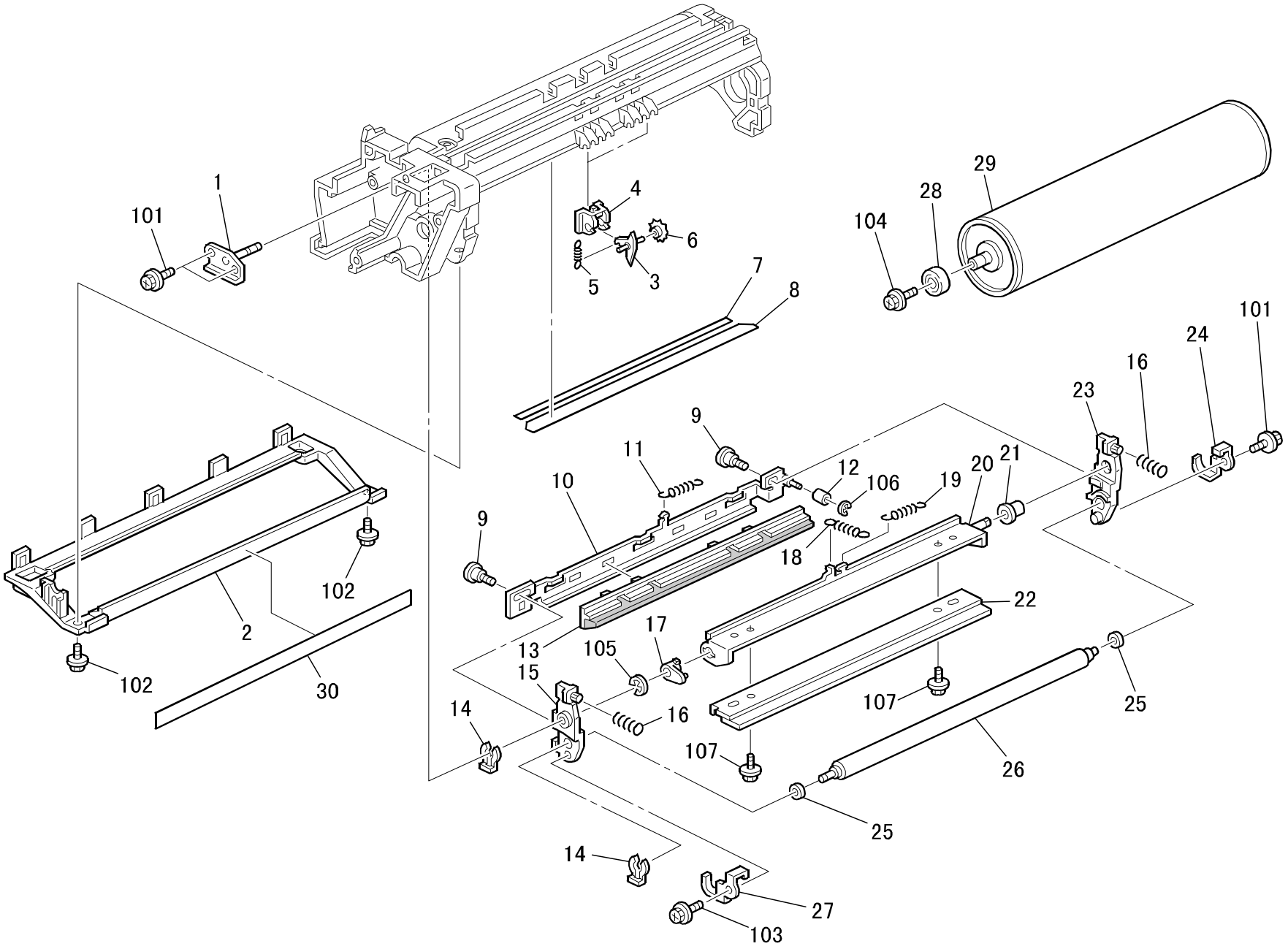

16.PCU UNIT 2 (A230/A231/A232)

Index No.	Part No.	Description	Q'ty Per Assembly
1	A232 2316	Stud - Cleaning Bracket	1
2	A232 2406	Lower Frame - OPC	1
3	**AD02 5021**	**Pick-off Pawl**	**2**
4	A232 2340	Holder - Pick-off Pawl	2
5	AA06 2302	Pressure Spring	2
6	A232 2339	Spur	2
7	A232 2280	Tape - Entrance Seal	1
8	AD04 7023	Cleaning Entrance Seal	1
9	A232 2356	Stepped Screw - M6	2
10	A232 2298	Bracket - Charge Cleaning	1
11	AA06 2301	Tension Spring	1
12	A232 2300	Roller - Cleaning	1
13	**A232 2301**	**Cleaning Pad**	**1**
14	5447 2681	Snap Ring	2
15	A232 2303	Front Arm - Charge Unit	1
16	AA06 3561	Pressure Spring	2
17	A232 2315	Front Bushing - Cleaning Bracket	1
18	AA06 2299	Pressure Spring	1
19	AA06 2300	Tension Spring	1
20	A232 2310	Bracket - Cleaning Blade	1
21	A232 2318	Collar - Cleaning	1
22	**A232 2353**	**Cleaning Blade Ass'y**	**1**
23	A232 2305	Rear Arm - Charge Unit	1
24	A232 2308	Rear Terminal - Charge Roller	1
25	A232 2421	Bushing - 6x10x3	2
26	**AD02 7006**	**Charge Roller**	**1**
27	A232 2354	Front Terminal - Charge Roller	1
28	A232 3553	Ball Bearing - 8x16x5	1
29	A230 9510	OPC Drum	1
30	A232 2422	Guide PCU	1

Index No.	Part No.	Description	Q'ty Per Assembly
101	0450 3008B	Tapping Screw - M3x8	
102	0451 3008B	Tapping Screw - M3x8	
103	0450 3006B	Tapping Screw - M3x6	
104	0450 4008B	Tapping Screw - 4x8	
105	0720 0040E	Retaining Ring - M4	
106	0720 0015E	Retaining Ring - 1.5	
107	0451 3006B	Tapping Screw - M3x6	

17.TRANSFER UNIT 1 (A230/A231/A232)

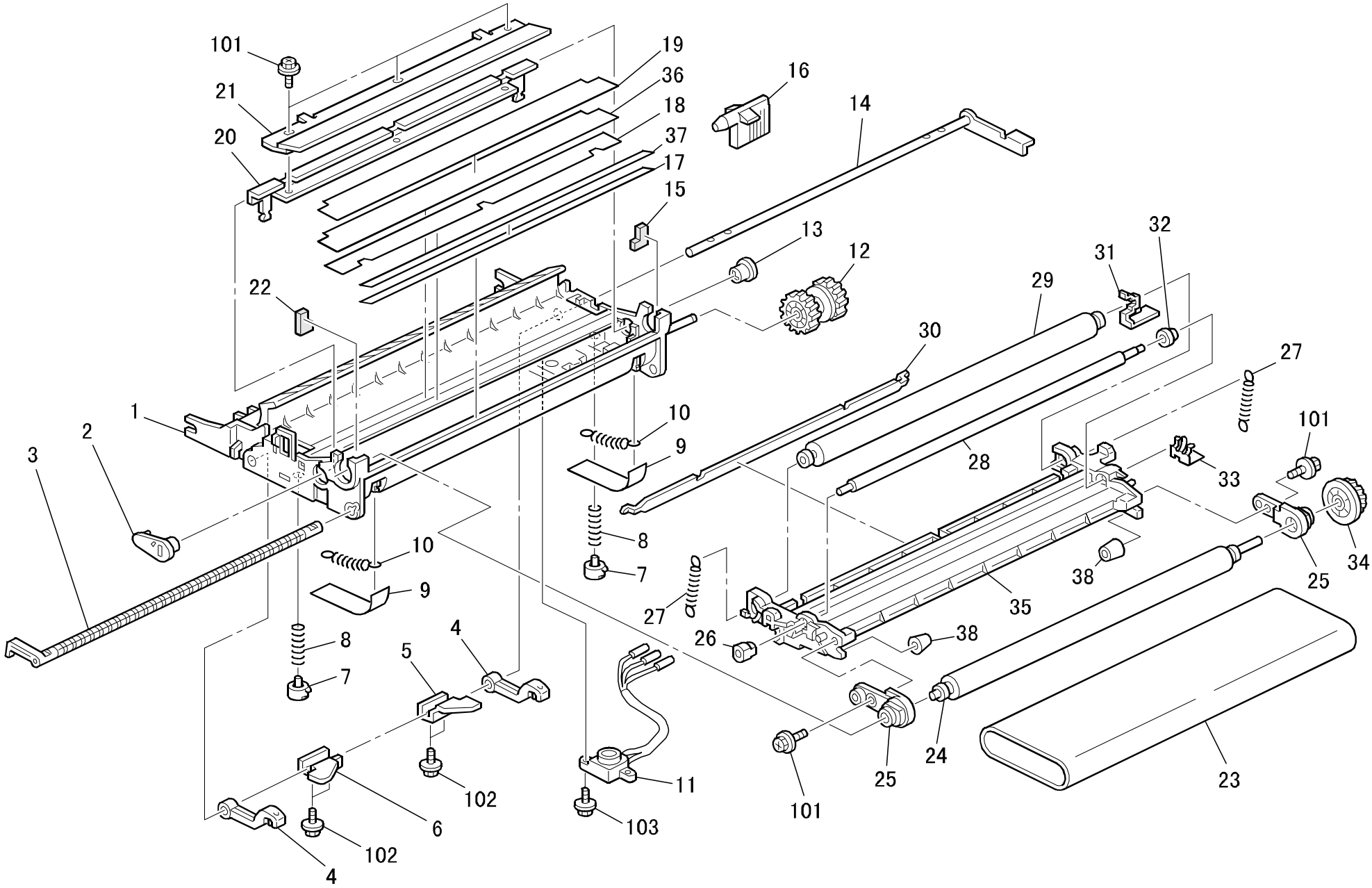

17.TRANSFER UNIT 1 (A230/A231/A232)

Index No.	Part No.	Description	Q'ty Per Assembly
1	A232 3900	Case - Transfer Unit	1
2	A232 3925	Front Bushing - Cleaning Holder	1
3	A232 3935	Shaft - Transfer Unit Stopper	1
4	A232 3916	Pressure Lever - Transfer Belt	2
5	A232 3911	Rear Lever - Transfer Belt	1
6	A232 3912	Front Lever - Transfer Belt	1
7	A232 3921	Spring Anchor	2
8	AA06 3305	Torsion Spring	2
9	AA15 0401	Seal - 70x20	2
10	AA06 0711	Pressure Spring	2
11	AW31 0006	Toner Overflow Sensor	1
12	AB01 7429	Gear - 27Z	1
13	A232 3924	Rear Bushing - Cleaning Holder	1
14	A232 3917	Release Lever - Transfer Belt	1
15	A232 3908	Seal - Rear Case	1
16	A232 3913	Bin - Release Lever	1
17	A232 3903	Tape - Entrance Mylar	1
18	A232 3905	Seal - Shield Plate	1
19	A232 3907	Seal - Transfer Exit	1
20	A232 3923	Bracket - Cleaning Blade	1
21	**A232 3930**	**Cleaning Blade - Transfer Belt**	**1**
22	A232 3909	Seal - Front Case	1
23	**A232 3880**	**Transfer Belt**	**1**
24	A232 3894	Drive Roller - Transfer Belt	1
25	A232 3893	Arm - Transfer Belt	2
26	AA08 0231	Bushing - Bias Roller	1
27	AA06 0712	Torsion Spring	2
28	A232 3889	Bias Roller	1
29	A232 3885	Driven Roller - Transfer Unit	1
30	A232 3883	Spring Plate - Transfer Unit	1
31	A232 3887	Rear Terminal - Transfer Belt	1
32	AA08 2054	Bushing - M4	1
33	A232 3891	Bias Terminal	1
34	AB01 1190	Gear - 25Z	1
35	A232 3882	Frange - Transfer Unit	1

Index No.	Part No.	Description	Q'ty Per Assembly
36	A232 3906	Seal - Rear Transfer Exit	1
37	A232 3904	Entrance Mylar - Transfer Unit	1
38	A232 3926	Transfer Belt Roller	2
101	0451 3006B	Tapping Screw - M3x6	
102	0951 3006B	Philips Screw With Flat Washer - M3x6	
103	0450 3008B	Tapping Screw - M3x8	

18.TRANSFER UNIT 2 (A230/A231/A232)

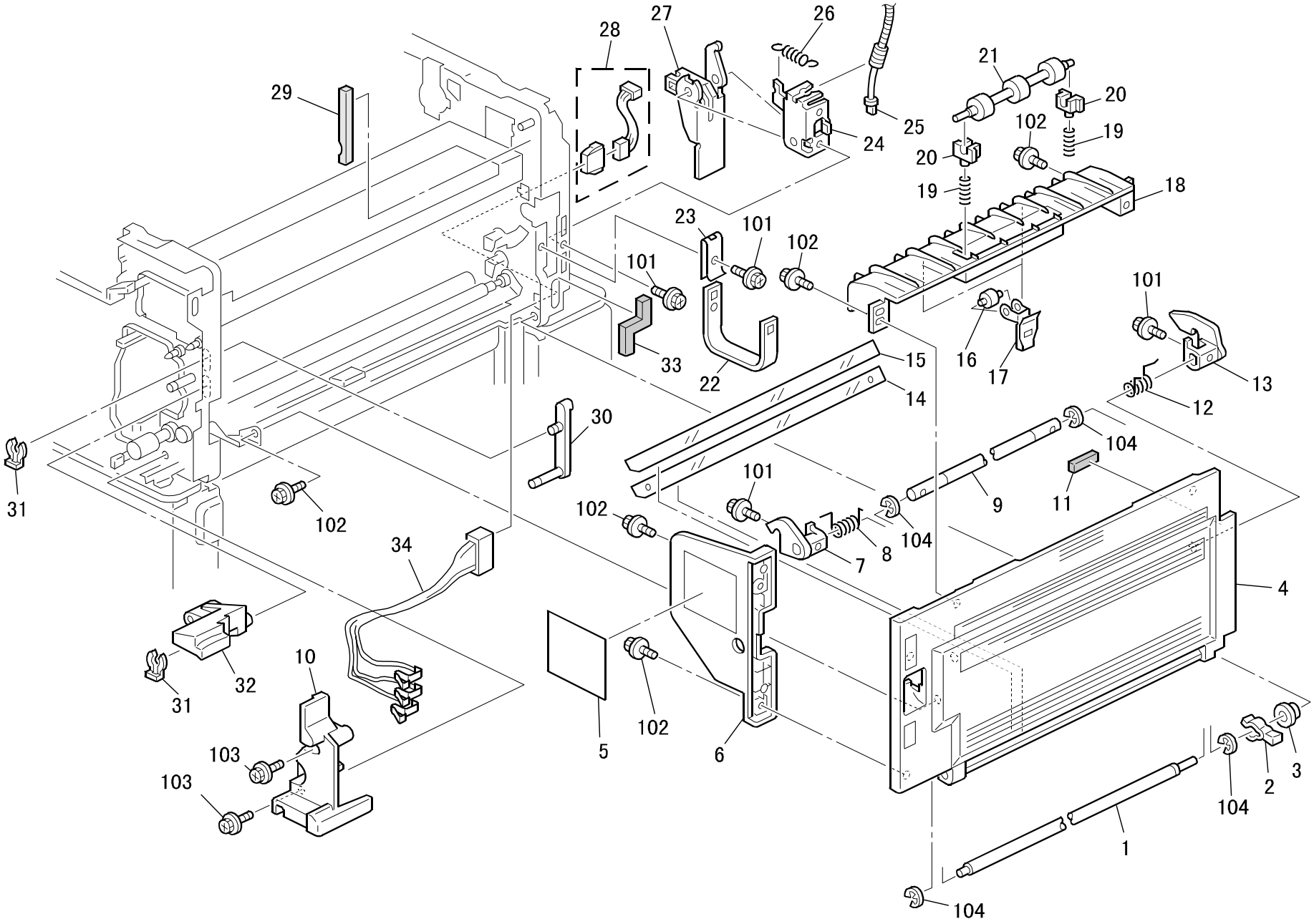

18.TRANSFER UNIT 2 (A230/A231/A232)

Index No.	Part No.	Description	Q'ty Per Assembly
1	A232 3941	Fulcrum Pin - Right Cover	1
2	A232 3942	Stopper - Rightcover	1
3	AA08 2079	Bushing - 6x8x5.8	1
4	A232 3940	Right Cover	1
5	A232 3991	Decal - Shield Cover	1
6	A232 3977	Shield Cover	1
7	A232 3945	Front Hook - Right Cover	1
8	AA06 6575	Torsion Spring	1
9	AA14 0666	Shaft - Hook	1
10	A232 1373	Right Inner Cover	1
11	AA15 3392	Sponge - 24x6x5	1
12	AA06 6576	Torsion Spring	1
13	A232 3948	Rear Hook - Right Cover	1
14	A232 3999	Lower Entrance Guide	1
15	A232 3998	Upper Entrance Guide	1
16	AF04 0559	Driven Roller - M9	2
17	A232 4493	Roller Holder	2
18	A232 4491	Guide Plate - Fusing Exit	1
19	AA06 3306	Tension Spring	2
20	AA08 0232	Bushing - M4	2
21	AF02 0408	Driven Roller - M16	1
22	A232 3963	Band Stopper	1
23	A232 3962	Spring Plate - Band Stopper	1
24	A232 1160	Bracket - Switch Lever	1
25	AA05 1027	Wire - Fusing Drive	1
26	AA06 0689	Tension Spring	1
27	A232 1161	Lever - Interlock Switch	1
28	A232 5421	Harness - Toner Overflow Sensor	1
29	AA15 3393	Frame Seal - Rear Vertical	1
30	A232 3950	Hook Lever	1
31	5447 2681	Snap Ring	2
32	AG05 1137	Handle Lever	1
33	AA15 3391	Frame Seal - Rear Vertical	1
34	A232 3995	Relay Harness-toner Overflow Sensor	1

Index No.	Part No.	Description	Q'ty Per Assembly
101	0451 3006B	Tapping Screw - M3x6	
102	0450 3008B	Tapping Screw - M3x8	
103	0451 3008H	Tapping Screw - M3x8	
104	0720 0060E	Retaining Ring - M6	

19.DEVELOPMENT UNIT (A230/A231/A232)

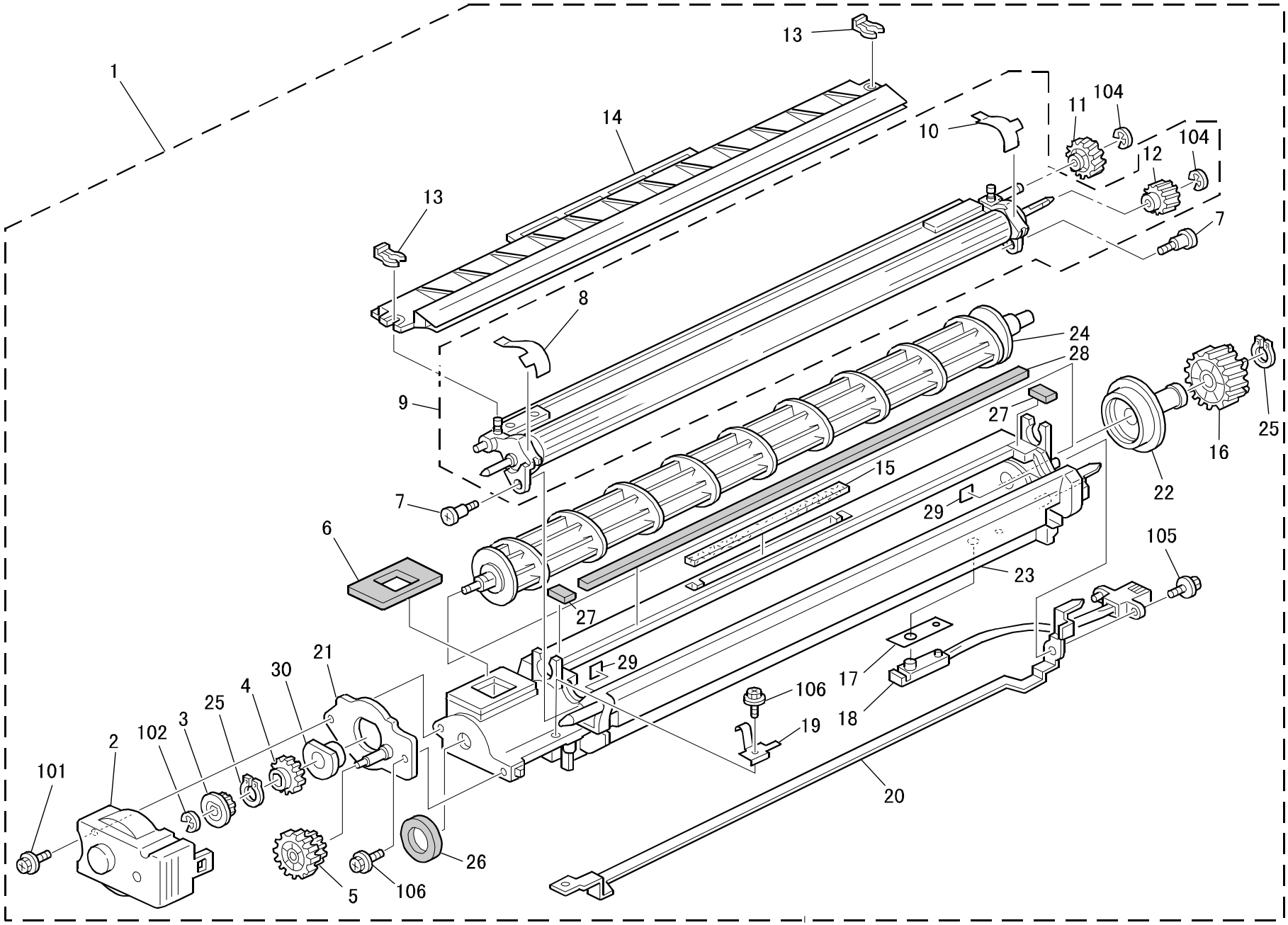

19.DEVELOPMENT UNIT (A230/A231/A232)

Index No.	Part No.	Description	Q'ty Per Assembly
1	A232 7260	Development Unit	1
2	A232 3155	Front Cover - Development Unit	1
3	AB01 4061	Gear - 13Z	1
4	AB01 4060	Gear - 21Z	1
5	AB01 4062	Gear - 17Z/25Z	1
6	AA15 3052	Entrance Seal - Toner Supply	1
7	AA14 3307	Stepped Screw - M3	2
8	A232 3132	Rear Shield - Development Sleeve	1
9	A232 3100	Development Roller Ass'y	1
10	A232 3131	Front Shield - Development Sleeve	1
11	AB01 1384	Gear - 29Z	1
12	AB01 1386	Development Sleeve Gear	1
13	5206 2686	Snap Ring	2
14	A232 3150	Entrance Seal Ass'y	1
15	**AA01 2102**	**Development Filter**	**1**
16	AB01 1383	Jooint Gear - 45z	1
17	A232 3067	Tape - TD Sensor	1
18	A232 3065	TD Sensor	1
19	A232 3068	Front Bias Terminal - Dev.unit	1
20	A232 3069	Rear Bias Terminal - Dev.unit	1
21	A232 3091	Flange - Side Plate	1
22	A232 3081	Flange - Paddle	1
23	A232 3056	Lower Development Case	1
24	AD03 8078	Paddle	1
25	AA15 2283	Ring - M12	2
26	AA15 3062	Sponge - M46	1
27	AA15 3054	Sponge - 17x7x5	2
28	AA15 3053	Sponge - 317x5x5	1
29	AA15 3059	Sponge - 8x8x1	2
30	AA08 0234	Bushing - 12x18x6	1

Index No.	Part No.	Description	Q'ty Per Assembly
101	0450 3010B	Tapping Screw - M3x10	
102	0720 0030E	Retaining Ring - M3	
103	0725 0110E	C Ring - M11	
104	0720 0040E	Retaining Ring - M4	
105	0450 3008B	Tapping Screw - M3x8	
106	0450 3010B	Tapping Screw - M3x10	

20.FUSING UNIT (A230/A231/A232)

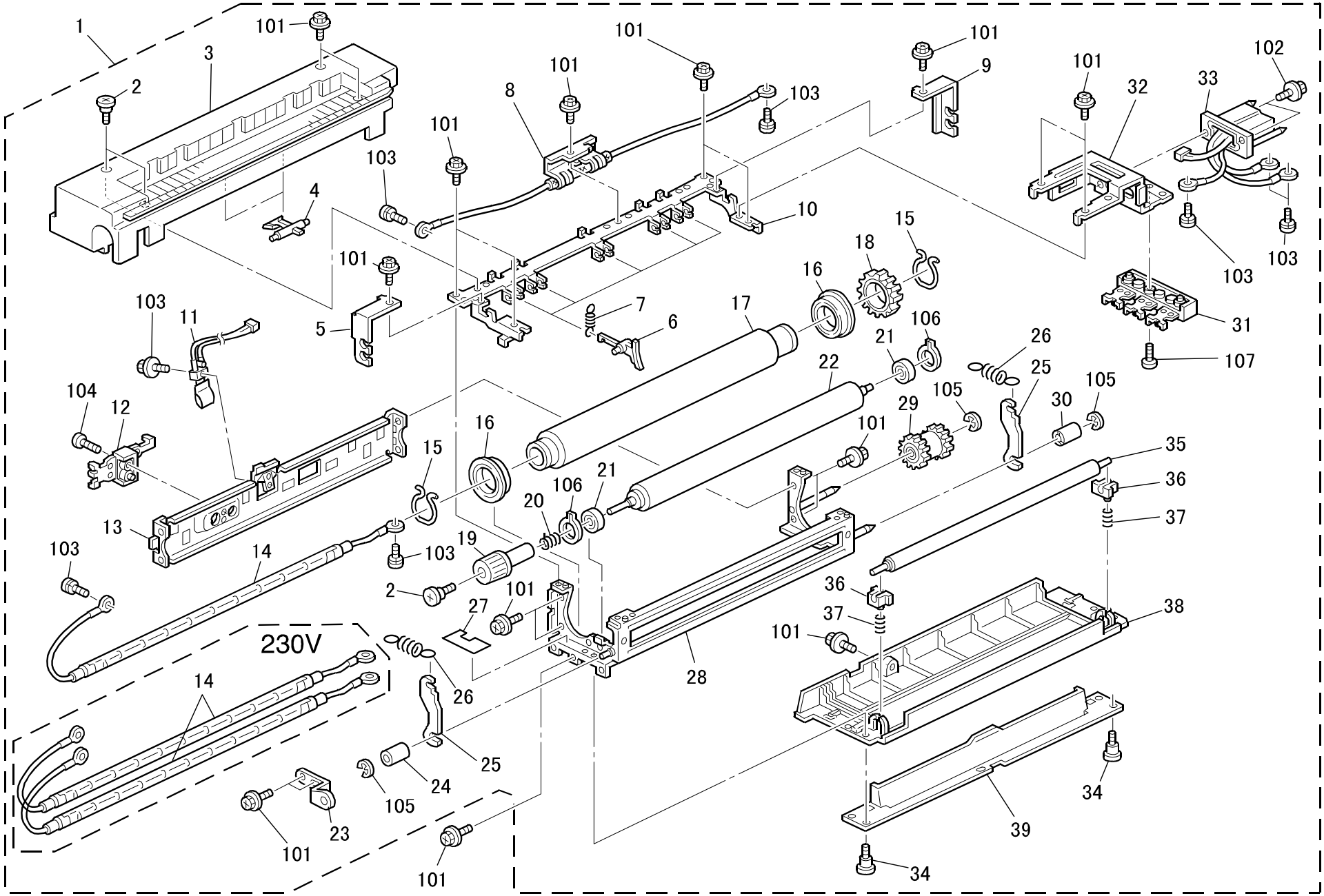

20.FUSING UNIT (A230/A231/A232)

Index No.	Part No.	Description	Q'ty Per Assembly
1	A232 7320	Fusing Unit Ass'y (115V)	1
1	A232 7720	Fusing Unit Ass'y (230V)	1
2	5206 2684	Shoulder Screw - M3	2
3	A232 4131	Fusing Cover	1
4	AE04 4024	Pressure Roller Stripper	2
5	A232 4111	Front Bracket - Fusing Lamp	1
6	**AE04 4022**	**Hot Roller Stripper**	**5**
7	AA06 0701	Tension Spring	5
8	A232 4100	Thermofuse	1
9	A232 4115	Rear Bracket - Fusing Lamp	1
10	A232 4081	Upper Frame - Fusing Unit	1
11	AW10 0042	Thermistor	1
12	A232 4105	Terminal Plate - Thermofuse	1
13	A232 4055	Stay - Fusing Unit	1
14	AX44 0107	Fusing Lamp - 120v 860w	1
14	AX44 0108	Fusing Lamp - 230v 430w	2
15	A232 4064	C Riung - Hot Roller	2
16	A232 3559	Ball Bearing - 30x42x7	2
17	**AE01 1041**	**Hot Roller**	**1**
18	AB01 3882	Gear - 40Z	1
19	AG05 0086	Knob - Hot Roller	1
20	A232 4071	Spring - Hot Roller Knob	1
21	A232 3560	Ball Bearing - 8x22x7	1
22	**AE02 0074**	**Pressure Roller - M30**	**1**
23	A232 4059	Positioning Plate - Pressure Lever	1
24	A232 4057	Front Collar - Pressure Lever	1
25	A232 4056	Pressure Lever	2
26	AA06 0687	Pressure Spring	2
27	A232 4053	Fusing Loer Shield	1
28	A232 4051	Frame - Fusing Unit	1
29	AB01 4046	Gear - 25Z	1
30	A232 4058	Rear Collar - Pressure Lever	1
31	A232 4095	Terminal Plate - Fusing Unit	1
32	A232 4092	Bracket - Fusing Connector	1
33	A232 4094	Harness - Fusing Unit (115V)	1

Index No.	Part No.	Description	Q'ty Per Assembly
33	A232 4151	Harness - Fusing Unit (230V)	1
34	AA14 0140	Screw - M3X4.5	2
35	AE04 2029	Fusing Cleaningroller	1
36	AA08 2073	Roller Busing	2
37	AA06 3570	Tension Spring	2
38	A232 4123	Upper Fusing Entrance Guide	1
39	A232 4127	Lower Fusing Entance Guide	1
101	0451 3006B	Tapping Screw - M3x6	
102	0451 3008B	Tapping Screw - M3x8	
103	0950 4006M	Philips Screw With Flat Washer - M4x6	
104	0453 3012B	Binding Self Tapping Screw - 3x12	
105	0720 0030E	Retaining Ring - M3	
106	0720 0080E	Retaining Ring - M8	
107	0957 3012B	Double Sems Screw - M3 X 12	

21.PAPER SEPARATION UNIT (A230/A231/A232)

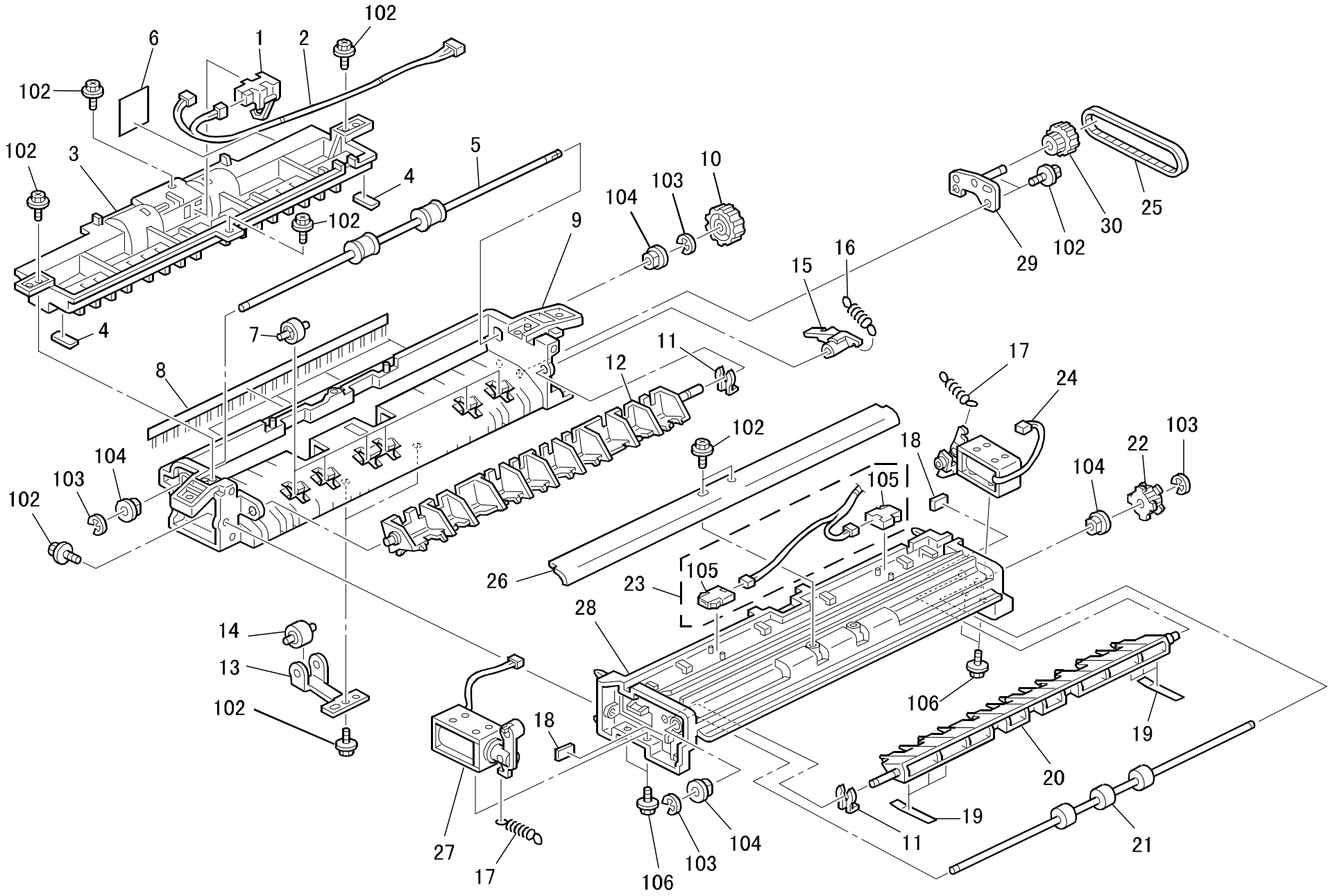

21.PAPER SEPARATION UNIT (A230/A231/A232)

Index No.	Part No.	Description	Q'ty Per Assembly
1	AW02 0098	Photosensor	1
2	A232 5422	Harness - Exit Sensor	1
3	A232 4465	Upper Guide Plate - Paper Exit	1
4	AA16 1127	Cushion - 16x6x4	2
5	AF02 0406	Transport Roller	1
6	A232 4488	Harness Guide	1
7	AF04 0557	Roller - M16	6
8	AA12 0089	Antistatic Brush	1
9	A232 4460	Left Frame - Paper Exit	1
10	AB01 4049	Gear - 24Z	1
11	5447 2681	Snap Ring	2
12	A232 4467	Entrance Junction Gate	1
13	A232 4463	Roller Holder	2
14	AF04 0560	Driven Roller	2
15	A232 4468	Lever - Entrance Junction Gate	1
16	AA06 0697	Tension Spring	1
17	AA06 0716	Tension Spring	2
18	AA16 1128	Cushion - 12x8x2	2
19	A232 4477	Guide - Junction Gate	6
20	A232 4473	Exit Junction Gate	1
21	AF02 0407	Transport Roller	1
22	AB03 0568	Pulley - 23T	1
23	A232 5423	Harness - Exit Gate Solenoid	1
24	A232 4481	Solenoid- Entrance Gate	1
25	AA04 3447	Timing Belt - S2M 210	1
26	A232 4479	Support Plate - Right Frame	1
27	A232 4484	Solenoid - Exit Gate	1
28	A232 4470	Right Frame - Paper Exit	1
29	A232 4474	Bracket - Idle Gear	1
30	AB01 7458	Gear Pulley - 18Z/22T	1

Index No.	Part No.	Description	Q'ty Per Assembly
101	0451 3006B	Tapping Screw - M3x6	
102	0450 3008B	Tapping Screw - M3x8	
103	0720 0040E	Retaining Ring - M4	
104	0805 3480	Bushing - 6mm	
105	1102 6245	Relay Connector - 2P	
106	0951 3005B	Philips Screw With Flat Washer - M3x5	

22.DUPLEX UNIT 1 (A687)

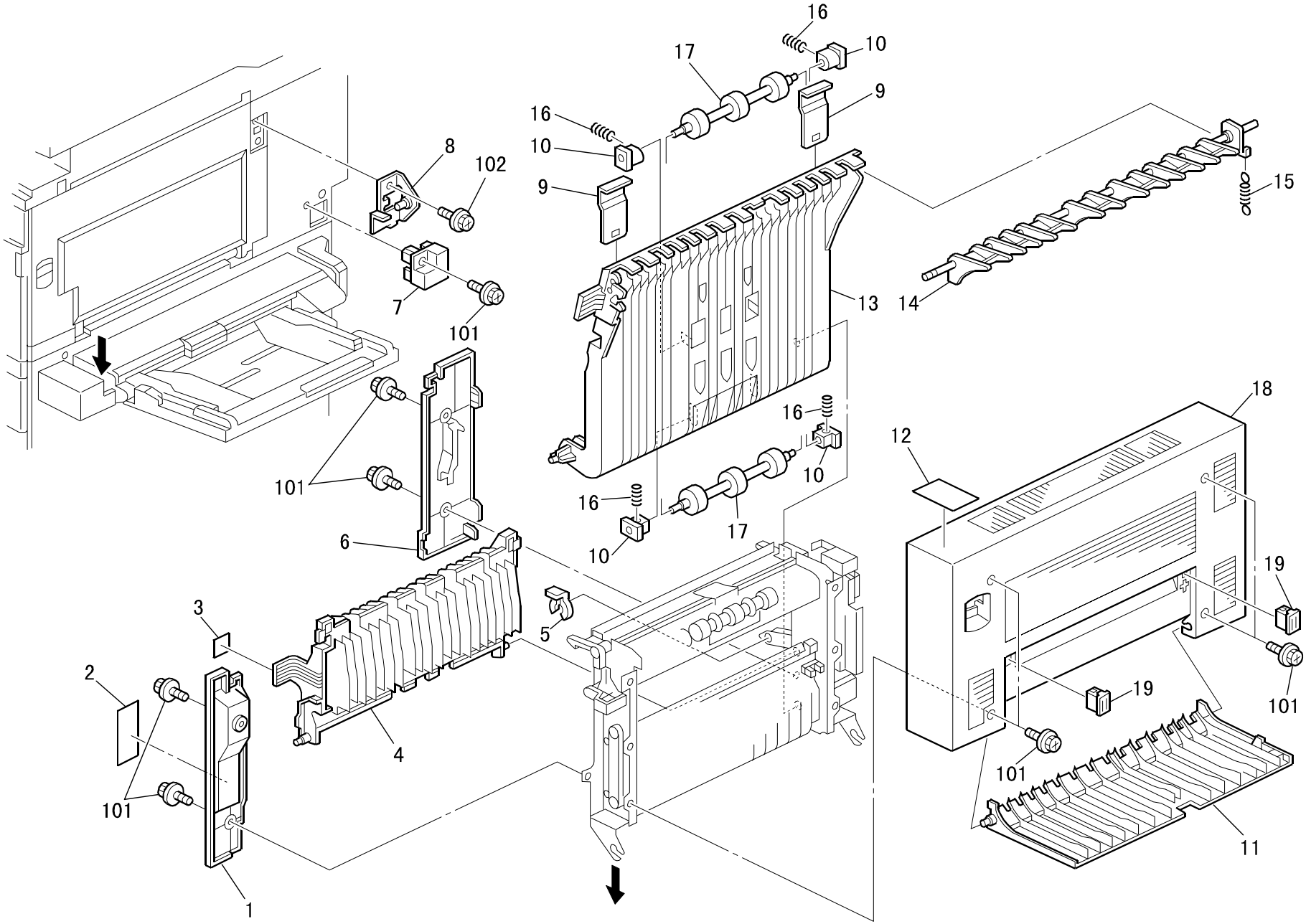

22.DUPLEX UNIT 1 (A687)

Index No.	Part No.	Description	Q'ty Per Assembly
1	A232 4720	Inner Cover - Duplex Unit	1
2	A232 4852	Jam Removal Decal - Duplex	1
3	A232 4851	Decal - Jam Removal	1
4	A232 4645	Middle Guide Plate	1
5	5447 2681	Snap Ring	1
6	A232 4730	Rear Inner Cover	1
7	A232 4810	Harness Cover - Duplex Unit	1
8	A232 4793	Bracket - Link Lever	1
9	A232 4653	Presuure Plate - Guide Plate	2
10	AA08 0034	Bushing - 4x5x7	4
11	A232 4709	Support Tray - Duplex Unit	1
12	A232 4853	Upper Decal - Duplex Unit	1
13	A232 4648	Guide Plate - Driven Roller	1
14	AF02 5036	Duplex Junction Gate	1
15	AA06 0709	Tension Spring	1
16	AA06 3303	Pressure Spring	4
17	AF02 0412	Driven Roller	2
18	A232 4700	Duplex Cover	1
19	AA02 1030	Magnet Catch	2

Index No.	Part No.	Description	Q'ty Per Assembly
101	0451 3008H	Tapping Screw - M3x8	
102	0451 3006B	Tapping Screw - M3x6	

23.DUPLEX UNIT 2 (A687)

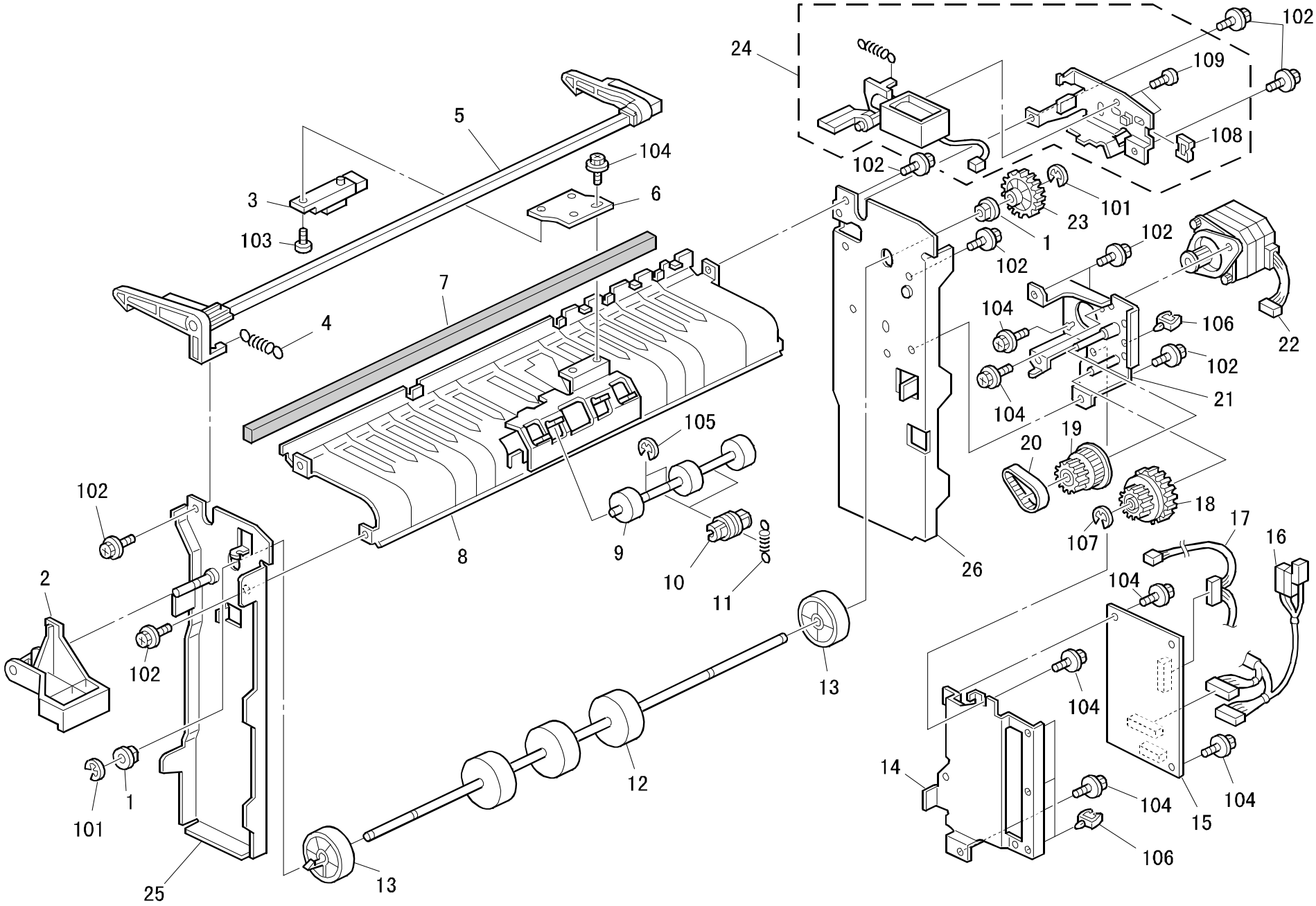

23.DUPLEX UNIT 2 (A687)

Index No.	Part No.	Description	Q'ty Per Assembly
1	AA08 2074	Bushing - M8	2
2	A232 4684	Handle - Unit Release	1
3	AW01 0048	Photo Sensor - GP2A28N1	1
4	AA06 6152	Tension Spring	1
5	A232 4685	Hook - Unit Release	1
6	A232 4763	Bracket - Entrance Sensor	1
7	AA16 2046	Cushion - 347x10x5	1
8	A232 4634	Inverter Guide	1
9	AF02 0411	Driven Roller	1
10	AA08 0227	Bushing - M4	2
11	AA06 0708	Pressure Spring	2
12	AF02 0413	Driven Roller	1
13	A232 4657	Inverter Roller	13
14	A232 4800	Bracket - Duplex Drive Board	1
15	A232 5140	Duplex Drive Board	1
16	A232 5432	Harness - Duplex Unit	1
17	A232 5433	Harness - Duplex Sensor	1
18	AB01 7455	Gear - 21Z/35Z	1
19	AB01 7456	Gear - 20Z	1
20	AA04 3443	Timing Belt - S2M 140	1
21	A232 4668	Bracket - Inverter Motor	1
22	A232 4665	DC Motor - 17W	1
23	AB01 4053	Gear - 30Z	1
24	A232 4692	Link Solenoid Ass'y	1
25	A232 4638	Front Side Plate	1
26	A232 4642	Rear Side Plate	1

Index No.	Part No.	Description	Q'ty Per Assembly
101	0720 0060E	Retaining Ring - M6	
102	0802 5265	Tapping Screw - M3x6	
103	0313 0060B	Philips Pan Head Screw - M3x6	
104	0451 3006B	Tapping Screw - M3x6	
105	0720 0030E	Retaining Ring - M3	
106	1105 0229	Clamp	
107	0720 0040E	Retaining Ring - M4	
108	1105 0328	Harness Clamp - ES-0505	
109	0313 0040B	Philips Pan Head Screw - M3x4	

24.DUPLEX UNIT 3 (A687)

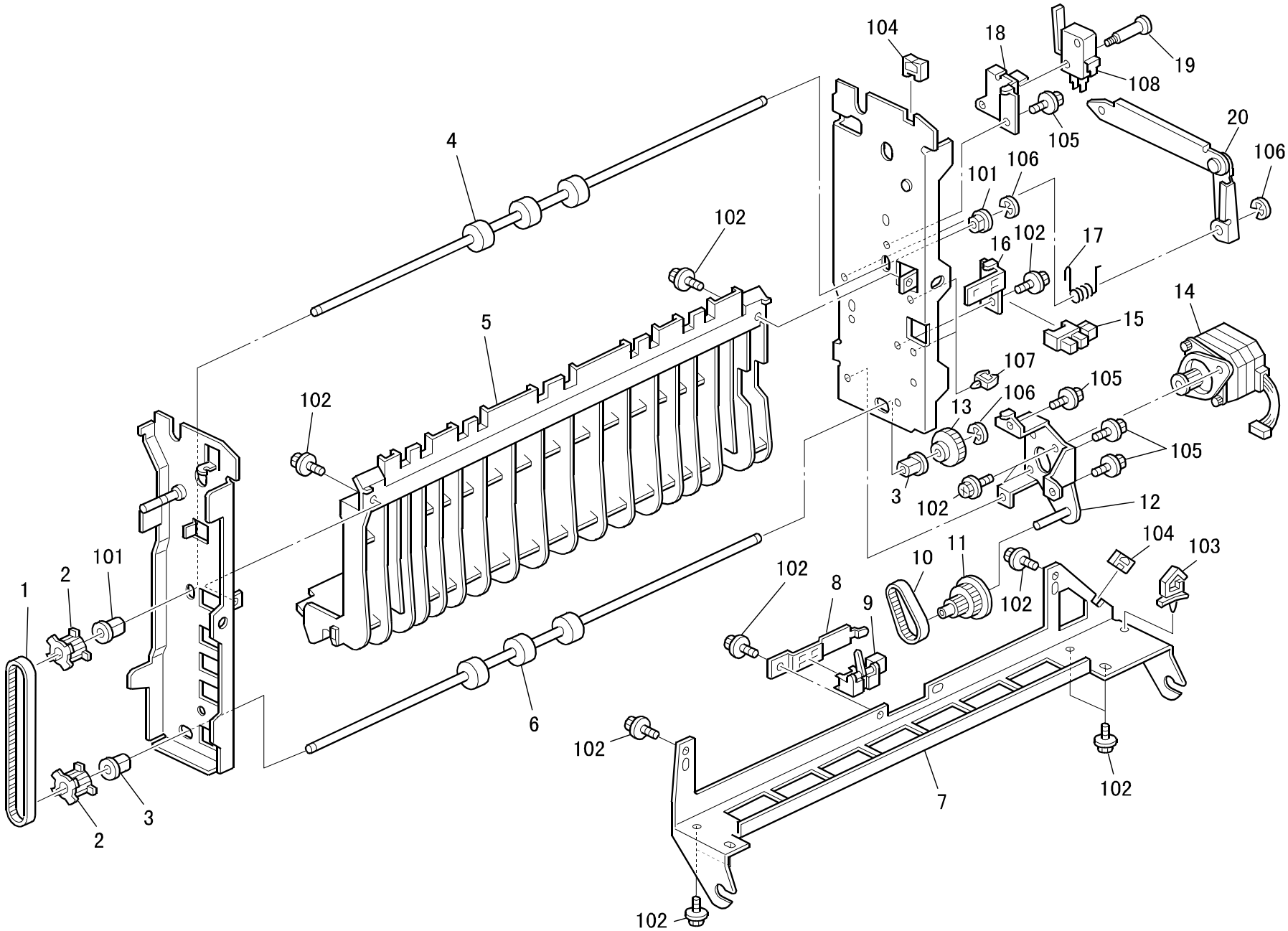

24.DUPLEX UNIT 3 (A687)

Index No.	Part No.	Description	Q'ty Per Assembly
1	AA04 3444	Timing Belt - S2M 350	1
2	AB03 0474	Pulley - 24T	2
3	AA08 2075	Bushing - M6	2
4	AF02 0414	Transport Roller	1
5	A232 4622	Guide Plate - Right Lower	1
6	AF02 0415	Transport Roller	1
7	A232 4630	Lower Stay - Duplex	1
8	A232 4757	Bracket - Feed Sensor	1
9	AW02 0102	Photointerruptor	1
10	AA04 3443	Timing Belt - S2M 140	1
11	AB01 7457	Gear Pulley - 20Z/40T	1
12	A232 4678	Bracket - Feed Motor	1
13	AB01 1088	Gear - 30Z	1
14	A232 4665	DC Motor - 17W	1
15	AW02 0056	Photointerruptor - EE-SX4235A-P1	1
16	A232 4751	Sensor Bracket	1
17	AA06 6293	Torsion Spring	1
18	A232 4697	Bracket - Micro Switch	1
19	AA14 3461	Stepped Screw - M2.5	1
20	A232 4790	Link - Duplex Unit	1

Index No.	Part No.	Description	Q'ty Per Assembly
101	0805 3480	Bushing - 6mm	
102	0451 3006B	Tapping Screw - M3x6	
103	1105 0291	Harness Clamp - LWS-3S	
104	1105 0328	Harness Clamp - ES-0505	
105	0802 5265	Tapping Screw - M3x6	
106	0720 0040E	Retaining Ring - M4	
107	1105 0229	Clamp	
108	1204 2466	Micro Switch - V-16506-1C25	

25.DRIVE SECTION 1 (A230/A231/A232)

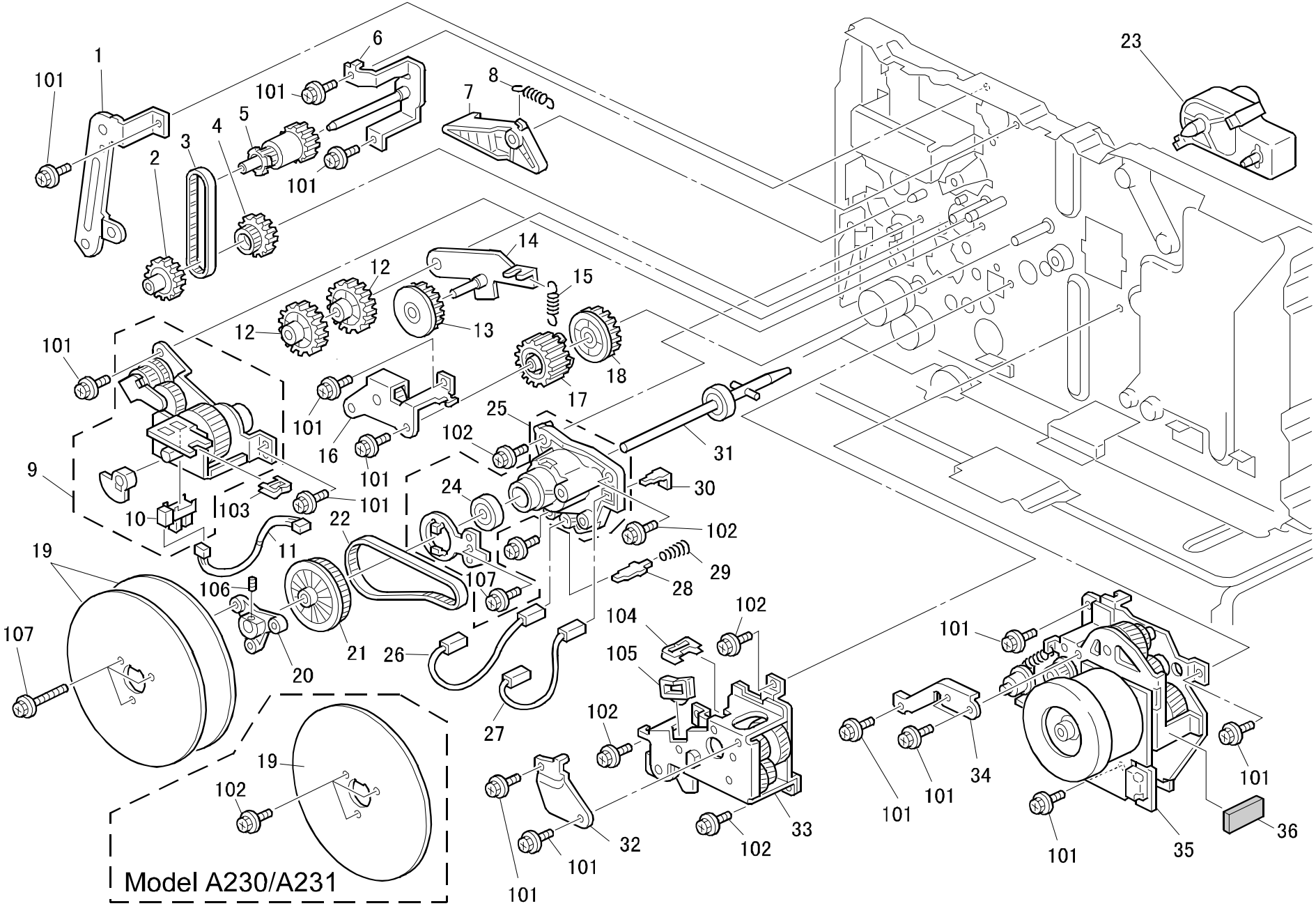

25.DRIVE SECTION 1 (A230/A231/A232)

Index No.	Part No.	Description	Q'ty Per Assembly
1	A232 1138	Belt Holder	1
2	AB01 4048	Gear - 30Z	1
3	AA04 3442	Timing Belt - S3M-264	1
4	AB01 7460	Gear - Pully - 30Z/24T	1
5	AB01 7461	Gear Pulley - 30Z/20T	1
6	A232 1136	Bracket - Belt Stopper	1
7	A232 2372	Lock Lever - Transfer Unit	1
8	AA06 0696	Tension Spring	1
9	A232 2379	Transfer Unit Clutch	1
10	AW02 0097	Photointerruptor	1
11	A232 5437	Relay Harness - Charge Contact Sensor	1
12	AB01 4045	Gear - 33Z	2
13	AB01 4043	Gear - 39Z	1
14	A232 1124	Bracket - Gear	1
15	AA06 0690	Spring	1
16	A232 1115	Fusing Relay Gear Ass'y	1
17	AB01 4041	Gear - 37Z	1
18	AB01 4042	Gear - 37Z	1
19	G020 1189	Fly Wheel (A230/A231)	1
19	G020 1189	Fly Wheel (A232)	2
20	G020 1184	Flange - Fly Wheel	1
21	AB03 0574	Timing Pulley - 79T	1
22	AA04 3441	Timing Belt - S2M	1
23	AX05 0117	DC Motor - 2.4W	1
24	A232 3552	Ball Bearing - 8x22x7	1
25	A232 7210	Drum Holder	1
26	A232 2383	Harness - Development Bias	1
27	A232 2381	Harness - Charge Roller	1
28	A232 2382	Terminal Plate - Development Bias	1
29	AA06 3371	Spring	1
30	A232 2380	Termal Plate - Change Roller	1
31	AD01 5020	Drum Shaft	1
32	A232 1149	Support Bracket - Drum Drive	1
33	A232 3170	Development Drive Unit Ass'y	1
34	A232 1151	Link Plate - Drum Drive	1

Index No.	Part No.	Description	Q'ty Per Assembly
35	AX06 0146	DC Motor - 38W (A230/A231)	1
35	AX06 0145	DC Motor - 48W (A232)	1
36	A232 5839	Sheet - DC Motor	1
101	0451 3006B	Tapping Screw - M3x6	
102	0451 3008B	Tapping Screw - M3x8	
103	1105 0328	Harness Clamp - ES-0505	
104	1105 0329	Clamp - ES-0510	
105	1105 0349	Edge Saddle	
106	0534 0050E	Headless Screw - M4 X 5	
107	0451 3014B	Tapping Screw - M3x14	

26.DRIVE SECTION 2 (A230/A231/A232)

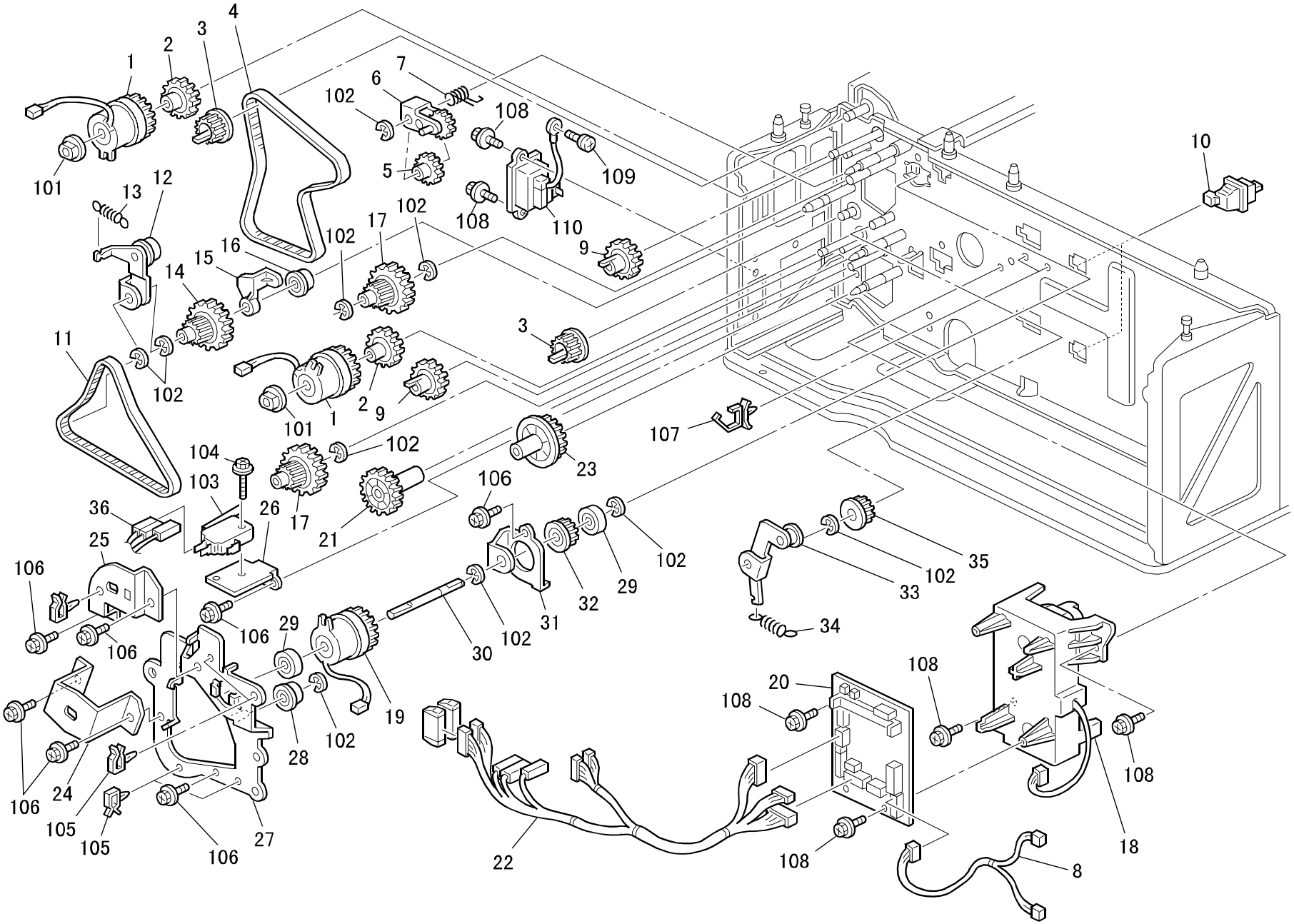

26.DRIVE SECTION 2 (A230/A231/A232)

Index No.	Part No.	Description	Q'ty Per Assembly
1	AX20 0153	Electrical Clutch	2
2	AB01 4037	Gear - 24Z	2
3	AB03 0565	Timing Pulley - 20T	2
4	AA04 3445	Timing Belt - S3M-360	1
5	AB01 4036	Gear - 27Z	1
6	A232 2700	Arm - Gear	1
7	AA06 6292	Tension Spring	1
8	A232 5406	Harness - Paper Tray Set	1
9	AB01 4038	Gear - 22Z	2
10	AW50 0022	Push Switch	2
11	AA04 3446	Timing Belt - S3M-312	1
12	A232 2705	Tightener - Paper Feed	1
13	AA06 0694	Tension Spring	1
14	AB03 0562	Timing Pulley - 31Z/20T	1
15	A232 2709	Spacer - By-pass Feed	1
16	AB03 0564	Pulley - M17	1
17	AB03 0561	Timing Pulley - 31Z/20T	2
18	AX04 0078	DC Motor - 3W	1
19	AX20 0138	Electrical Clutch	1
20	A232 5130	PFB Board	1
21	AB01 4039	Gear - 31Z	1
22	A232 5405	Main Harness - Paper Feed	1
23	AB01 4040	Gear - 29Z	1
24	A232 2711	Lower Holder Plate	1
25	A232 2710	Upper Holder Plate	1
26	A232 2882	Bracket - Micro Switch	1
27	A232 2707	Support Bracket	1
28	AB03 0590	Pulley - M17	1
29	A232 3552	Ball Bearing - 8x22x7	2
30	AA14 5260	Gear Shaft	1
31	A232 2702	Pulley Bracket	1
32	AB03 0566	Timing Pulley - 20T	1
33	A232 2703	Tightener	1
34	AA06 0695	Tension Spring	1
35	AB03 0567	Timiing Pulley - 18t	1

Index No.	Part No.	Description	Q'ty Per Assembly
36	A232 5522	Harness - Interlock Switch	1
101	0805 3480	Bushing - 6mm	
102	0720 0060E	Retaining Ring - M6	
103	1204 2466	Micro Switch - V-16506-1c25	
104	0451 3014B	Tapping Screw - M3x14	
105	1105 0267	Harness Clamp - YMC-10-0	
106	0451 3006B	Tapping Screw - M3x6	
107	1105 0310	Harness Clamp - LWS-1S	
108	0451 3008B	Tapping Screw - M3x8	
109	0801 0149	Philips Pan Head Screw - M4x6	
110	1102 7672	Connector - 54111-1615	

27.ELECTRICAL SECTION 1 (A230/A231/A232)

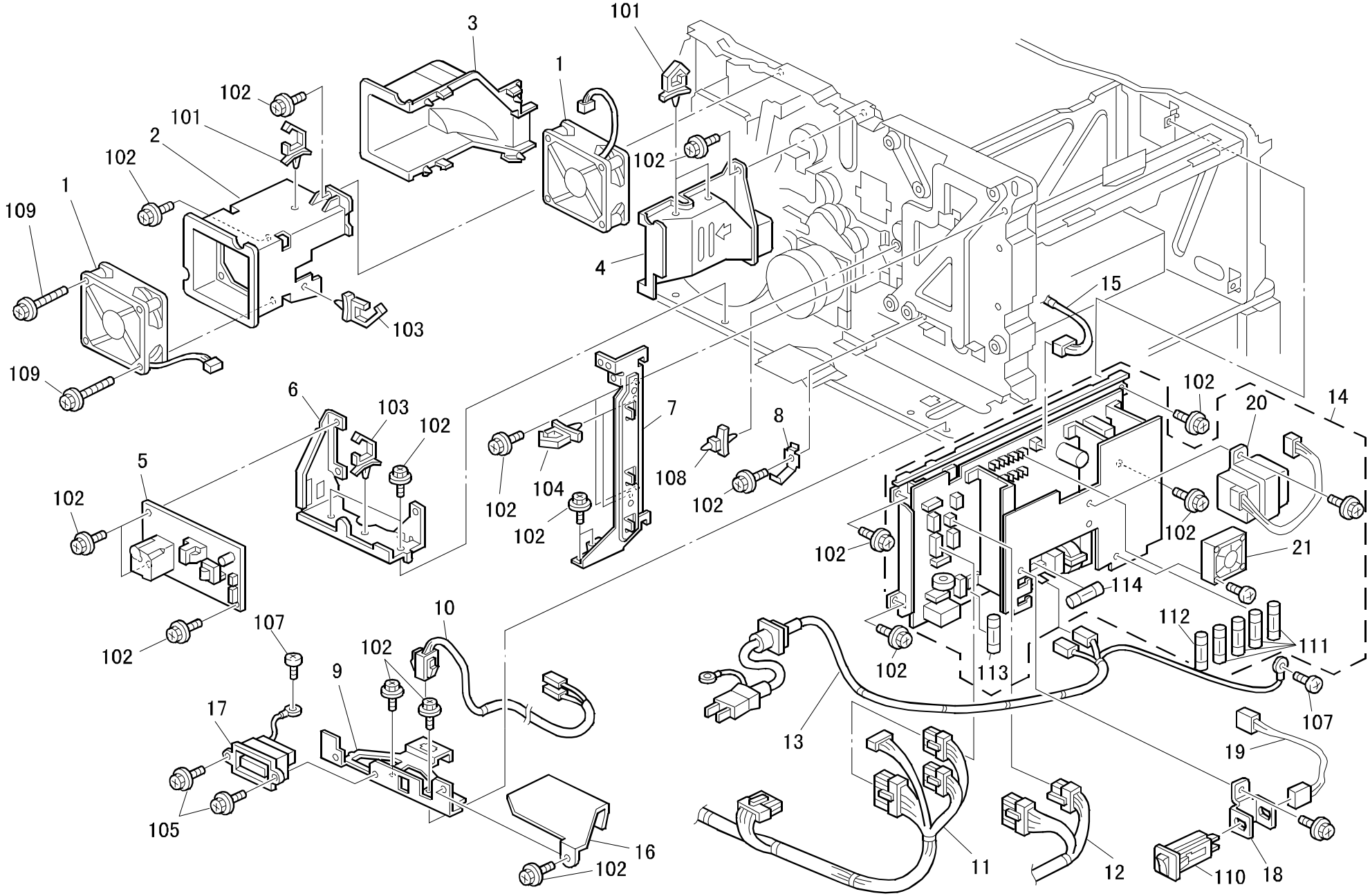

27.ELECTRICAL SECTION 1 (A230/A231/A232)

Index No.	Part No.	Description	Q'ty Per Assembly
1	AX64 0080	Fan Motor - DC 2.88W	2
2	A232 1172	Duct - Cooling Fan	1
3	A232 1170	Left Duct	1
4	A232 1171	Right Duct	1
5	AZ32 0086	High Voltage Supply - CBT	1
6	A232 5811	Bracket High Voltage Supply	1
7	A232 1086	Suppoert Plate - Scanner Arm	1
8	A232 1936	Holder - Laser Unit Ass'y	1
9	A232 5874	Bracket - Power Supply Cord	1
10	A232 7758	Harness - Heater	1
11	A232 5520	Harness - DC Supply	1
12	A232 5523	Harness - Scanner Unit	1
13	AZ00 0041	Power Supply Cord - 115V	1
13	AZ00 0042	Power Supply Cord - 230V	1
14	AZ23 0077	Power Supply Unit-115V	1
14	AZ23 0076	Power Supply Unit - 230V	1
15	A232 5441	Harness - LDDR	1
16	A232 1349	Harness Rear Cover	1
17	A232 5410	Connector - Finisher	1
18	A232 7757	Bracket - Circuit Breaker (230V)	1
19	A232 7756	Harness - Circuit Breaker (230V)	1
20	N601 4576	Coil - SK12M4	1
21	N607 6527	Fan Motor - DC 0.96W	1

Index No.	Part No.	Description	Q'ty Per Assembly
101	1105 0291	Harness Clamp - LWS-3S	
102	0451 3006B	Tapping Screw - M3x6	
103	1105 0310	Harness Clamp - LWS-1S	
104	1105 0292	Wire Saddle	
105	0451 3008B	Tapping Screw - M3x8	
107	0801 0149	Philips Pan Head Screw - M4x6	
108	1105 0437	Locking Support - FGS-4S	
109	0450 4035B	Philips Tapping Screw - M4x35	
110	1107 0472	Circuit Breaker - W28XQ1A 8A 25V (230V)	
111	1107 0907	Fuse - 6.3A 125V	
111	1107 0920	Fuse - 6.3A 250V	
112	1107 0906	Fuse - 4A 125V	
112	1107 0921	Fuse - 4A 250V	
113	1107 0910	Fuse - 2A 125V	
113	1107 0922	Fuse - 2A 250V	
114	1107 0919	Fuse - 8A 125V	
114	1107 0979	Fuse - 8A 250V	

28.ELECTRICAL SECTION 2 (A230/A231/A232)

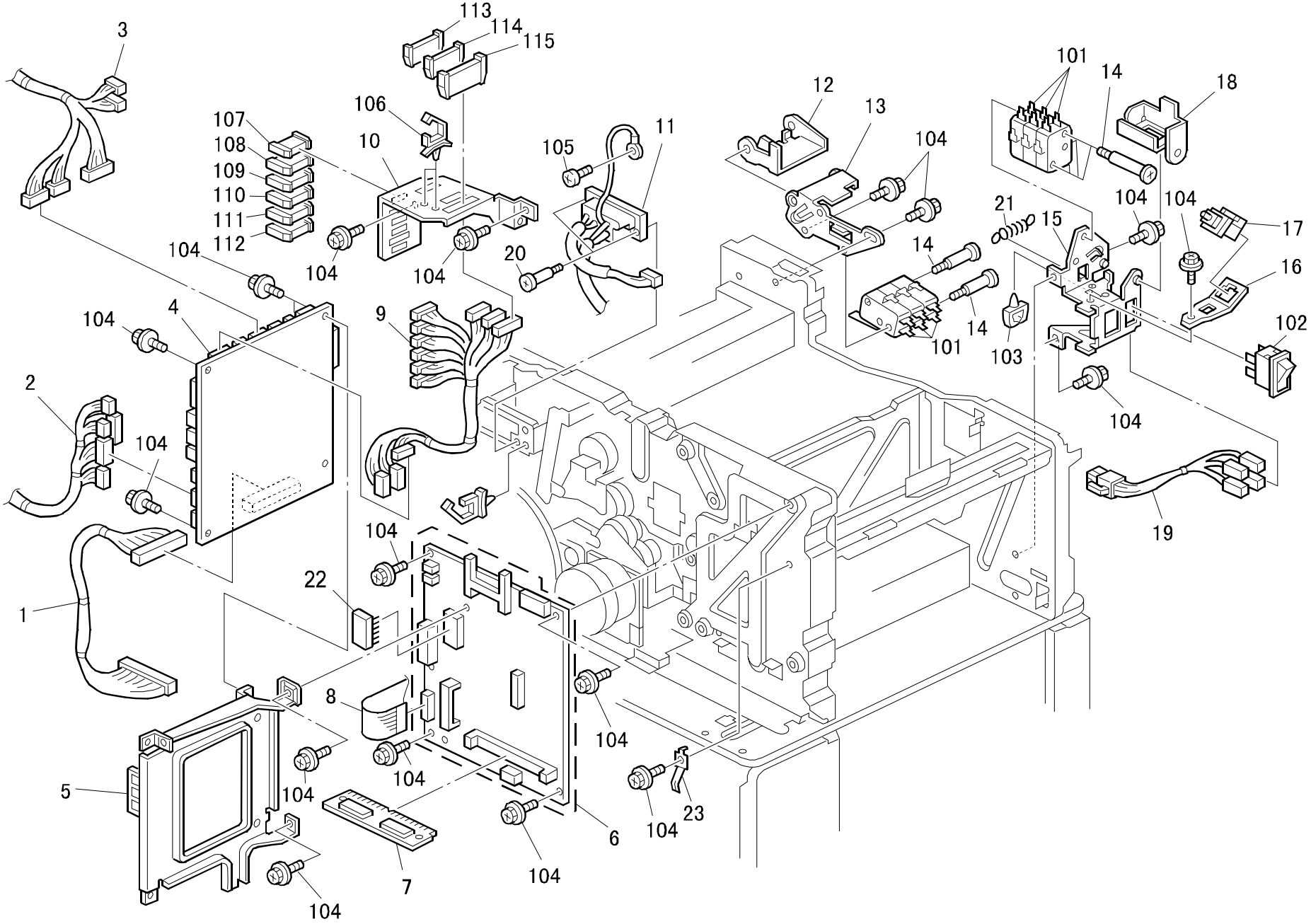

28.ELECTRICAL SECTION 2 (A230/A231/A232)

Index No.	Part No.	Description	Q'ty Per Assembly
1	A232 5403	Harness - IOB / PFB	1
2	A232 5401	DC Main Harness - Lower	1
3	A232 5402	DC Harness - Front Upper	1
4	A232 5125	IOB Board	1
5	A232 5831	Bracket - IOB	1
6	A232 5051	BICU Board (115V)	1
6	A232 5052	BICU Board (230V)	1
6	A232 5053	BICU Board (Asia)	1
7	G022 5906	Simm Memory 8MB (Option - A230)	1
8	A232 5441	Harness - LDDR	1
9	A232 5400	DC Main Haraness - Upper	1
10	A232 5825	Connector Bracket	1
11	A232 5431	Main Harness - Fusing Unit (115V)	1
11	A232 7755	Main Harness - Fusing Unit (230V)	1
12	A232 5861	Lever - Interlock Switch	1
13	A232 5860	Braket - Interlock Switch	1
14	AA14 3512	Stepped Screw - M2.5	4
15	A232 5866	Bracket - Push Switch	1
16	A232 5867	Angle Bracket Push Switch	1
17	AW50 0022	Push Switch	1
18	A232 5865	Lever - Push Switch	1
19	A232 5515	Harness - AC Switch	1
20	AA14 3301	Stepped Screw - M3X4	2
21	AA06 0713	Tension Spring	1
22	A230 9099	NVRAM - Minus Counter	1
23	A232 5838	Spring Plate - BICU	1

Index No.	Part No.	Description	Q'ty Per Assembly
101	1204 2466	Micro Switch - V-16506-1C25	
102	1204 2468	Switch - AC250/16A	
103	1105 0229	Clamp	
104	0451 3006B	Tapping Screw - M3x6	
105	0950 4006M	Philips Screw With Flat Washer - M4x6	
106	1105 0310	Harness Clamp - LWS-1S	
107	1102 6261	Relay Connector - 4P	
108	1102 6249	Reray Connector - 6p	
109	1102 6246	Relay Connector - 4P	
110	1102 6260	Relay Connector - 3P	
111	1102 6247	Connector - 4P	
112	1102 6245	Relay Connector - 2P	
113	1102 6943	Relay Connector -10p	
114	1102 6266	Relay Connector - 9P	
115	1102 6256	Relay Connector - 13P	

29.FRAME SECTION 1 (A230/A231/A232)

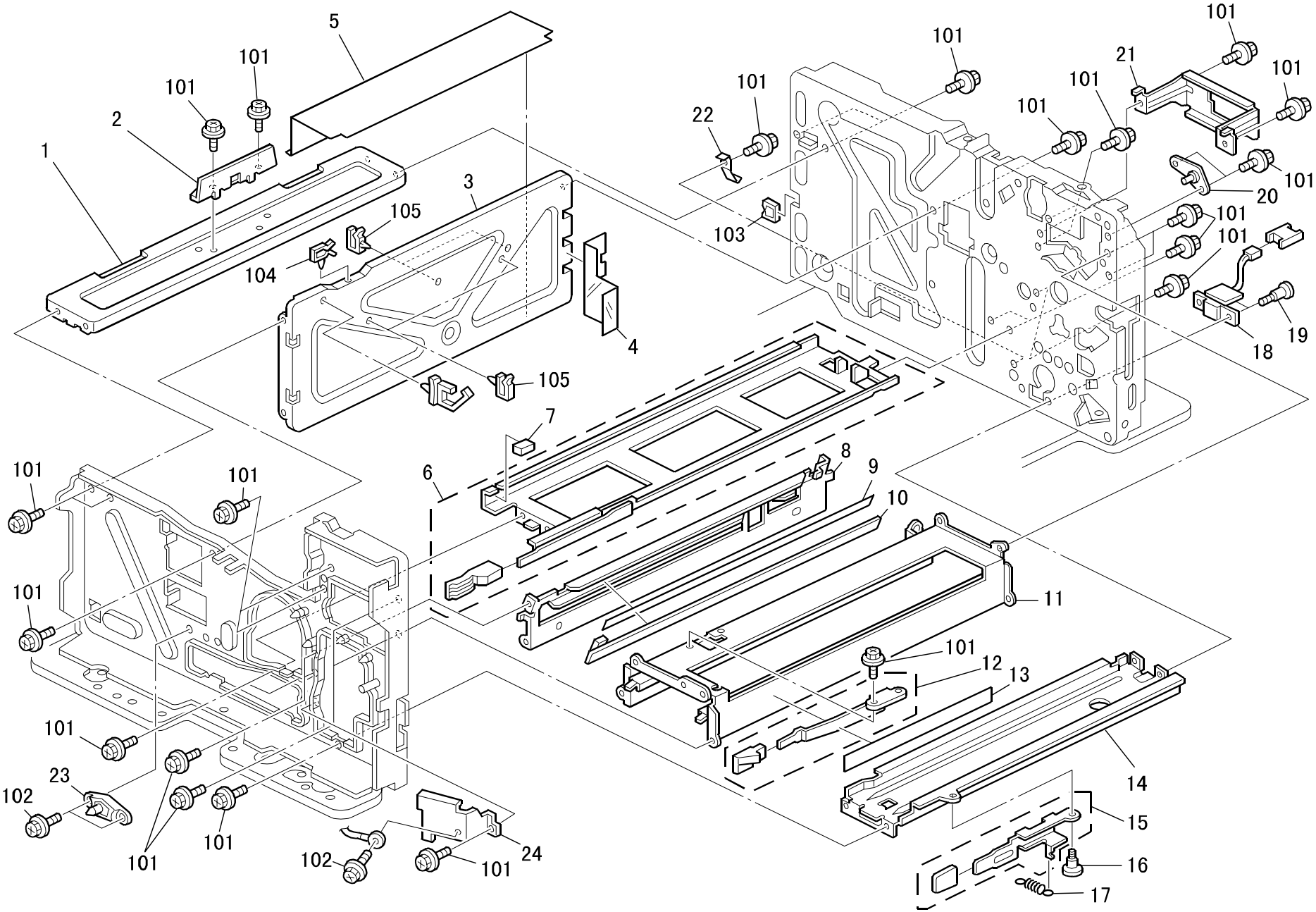

29.FRAME SECTION 1 (A230/A231/A232)

Index No.	Part No.	Description	Q'ty Per Assembly
1	A232 1082	Left Stay - Paper Exit	1
2	A232 1083	Bracket - Bridge Unit	1
3	A232 1081	Center Frame	1
4	AA15 0684	Shield Plate	1
5	A232 1089	Upper Plate - Laser Unit	1
6	A232 3210	Guide - Toner Supply Unit	1
7	A232 3264	Stopper - Slide Rail	1
8	A232 2362	Stay - PCU	1
9	A232 2373	Magnet - Quenching Lamp	1
10	AX50 0046	Quenching Lamp	1
11	A232 1075	Guide Rail - Fusing Unit	1
12	A232 4201	Stopper - Fusing Unit	1
13	A190 4476	Decal - High Temperature	1
14	A232 1071	Guide Rail - Development Unit	1
15	A232 3160	Lock Lever - Development Unit	1
16	AA14 3285	Stepped Screw	1
17	AA06 0714	Spring	1
18	A232 5425	Development I/T Board	1
19	AA14 3432	Stepped Screw - M3	2
20	A232 4780	Pin - Stopper	1
21	A232 1088	Bracket- Fusing Connector	1
22	A232 1936	Holder - Laser Unit Ass'y	1
23	A232 1937	Positing Pin - Laser Unit Ass'y	1
24	A232 1970	Shield Plate - LDDR	1

Index No.	Part No.	Description	Q'ty Per Assembly
101	0451 3006B	Tapping Screw - M3x6	
102	0451 3008B	Tapping Screw - M3x8	
103	1105 0349	Edge Saddle	
104	1105 0267	Harness Clamp - YMC-10-0	
105	1105 0290	Harness Clamp - HORIZONTAL	

30.FRAME SECTION 2 (A230/A231/A232)

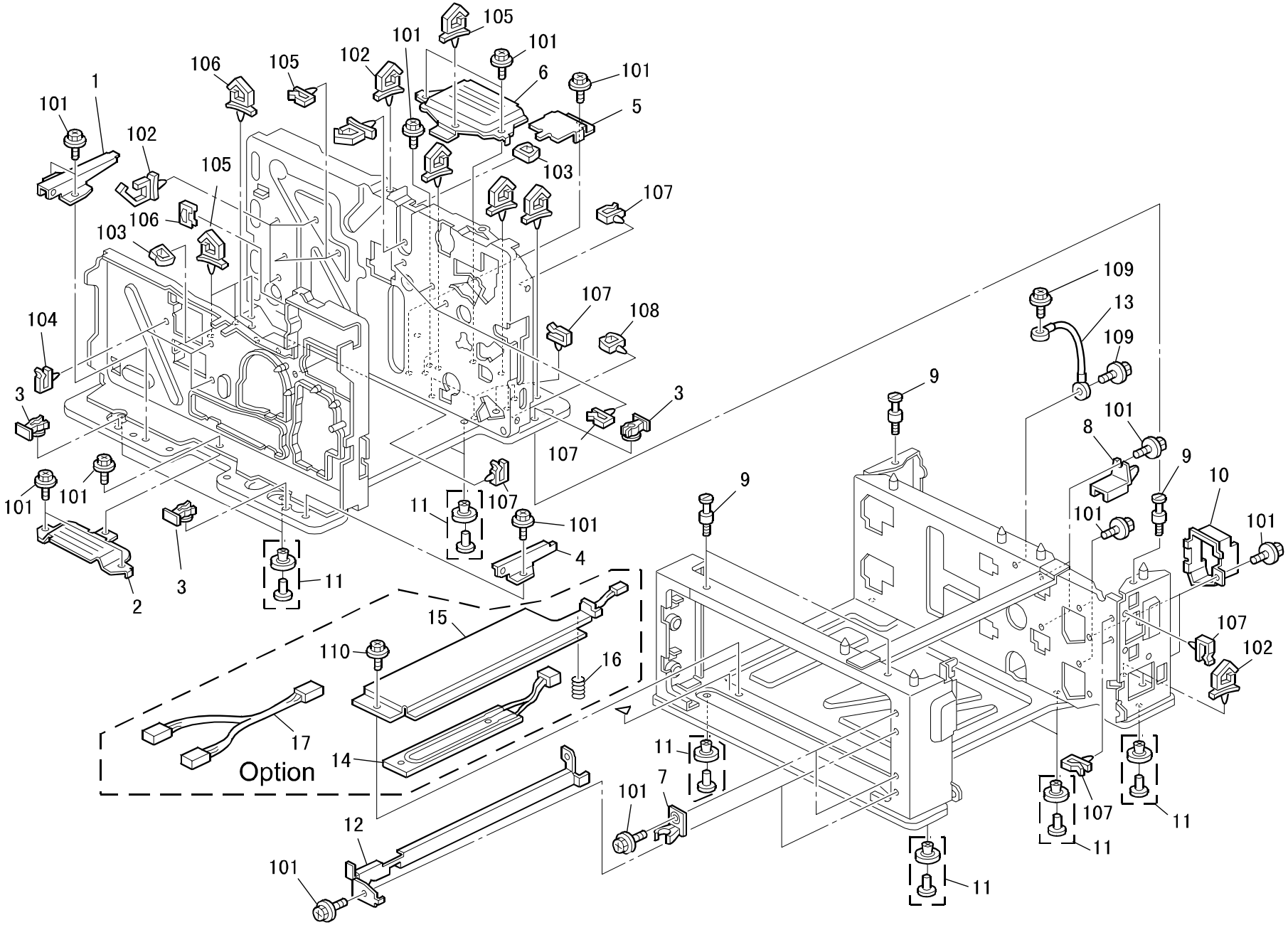

30.FRAME SECTION 2 (A230/A231/A232)

Index No.	Part No.	Description	Q'ty Per Assembly
1	A232 1266	Left Hinge - Front Cover	1
2	A232 1052	Front Grip Plate	1
3	A232 1054	Joint Stopper	4
4	A232 1267	Right Hinge - Front Cover	1
5	G020 1053	Guard Bracket	1
6	A232 1053	Rear Grip Plate	1
7	A232 2995	Front Positioning Guide	2
8	A232 2996	Rear Positioning Guide	1
9	AA14 3502	Bin Joint Guide	4
10	A232 2692	Cover - Paper Drive	2
11	AH01 0009	Rubber Pad - H5	9
12	A232 2990	Guide Rail - Paper Tray	2
13	A230 5516	Ground Wire Harness	1
14	AX40 0109	Heater - 120V 9W	1
14	AX40 0110	Heater - 230V 9W	1
15	A230 2520	Heat Sink - Heater	1
16	A230 2525	Stopper - Heater	1
17	A230 5518	AC Harness - Connector	1

Index No.	Part No.	Description	Q'ty Per Assembly
101	0451 3006B	Tapping Screw - M3x6	
102	1105 0310	Harness Clamp - LWS-1S	
103	1105 0349	Edge Saddle	
104	1105 0290	Harness Clamp - HORIZONTAL	
105	1105 0291	Harness Clamp - LWS-3S	
106	1105 0329	Clamp - ES-0510	
107	1105 0267	Harness Clamp - YMC-10-0	
108	1105 0229	Clamp	
109	0801 0149	Philips Pan Head Screw - M4x6	
110	0451 4006B	Tapping Scrw - 4X6	

31.OPTION HDD UNIT (A691)

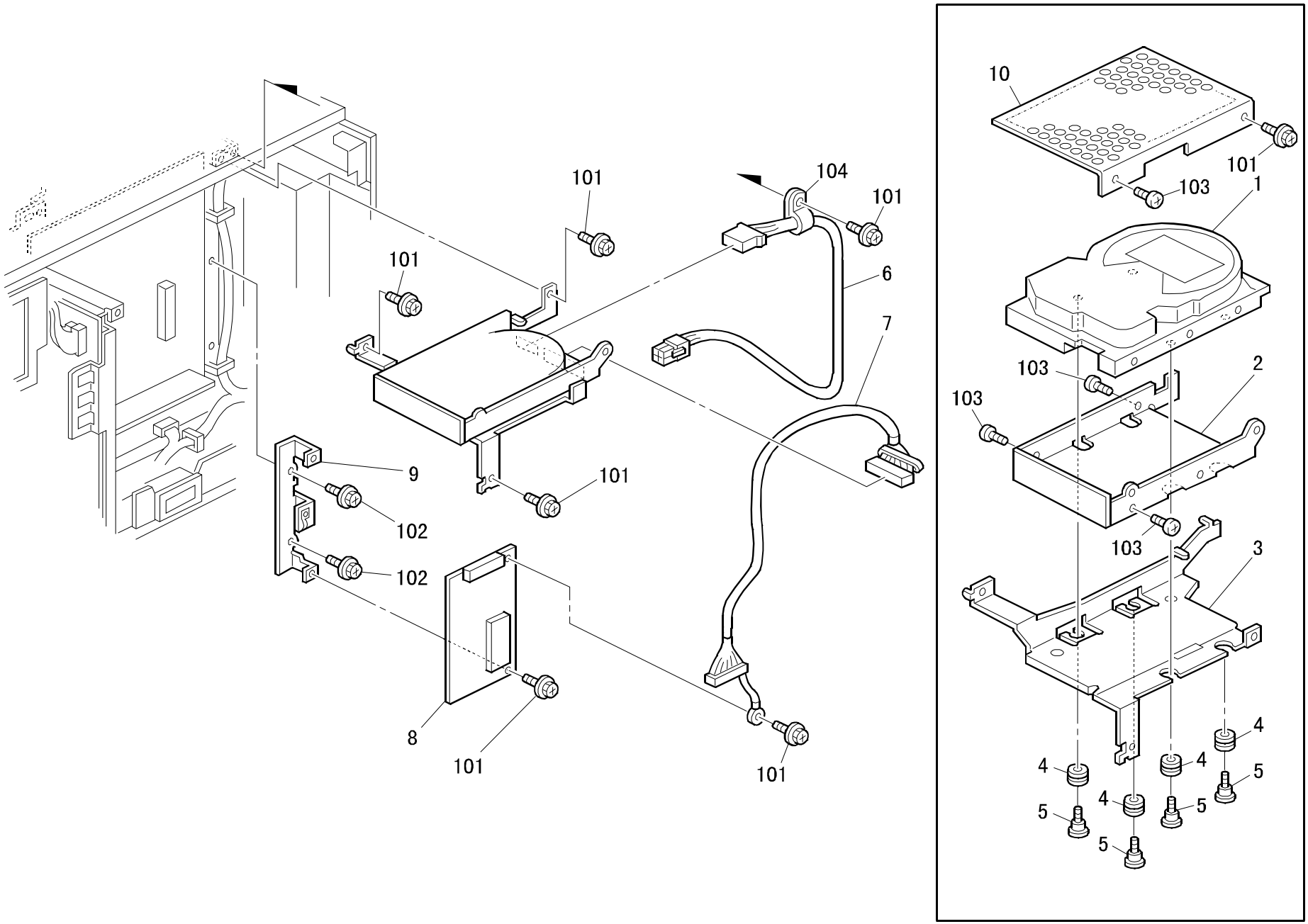

31.OPTION HDD UNIT (A691)

Index No.	Part No.	Description	Q'ty Per Assembly
1	A691 5871	1.6G Byte HDD	1
2	A691 5872	HDD Lower Cover	1
3	A691 5892	HDD Bracket	1
4	AA16 1125	Grometto	4
5	AA14 3499	Stepped Screw	4
6	A691 5881	DC Power Harness	1
7	A691 5883	Interface Harness	1
8	A691 5100	MSU Board	1
9	A691 5895	MSU Board Bracket	1
10	A691 5875	HDD Upper Cover	1

Index No.	Part No.	Description	Q'ty Per Assembly
101	0451 3006B	Tapping Screw - M3x6	
102	0801 0149	Philips Pan Head Screw - M4X6	
103	0801 0153	UNC Bind Screw - 6-32	
104	1105 0484	Clamp	

32.OPTION EXIT TRAY (A825)

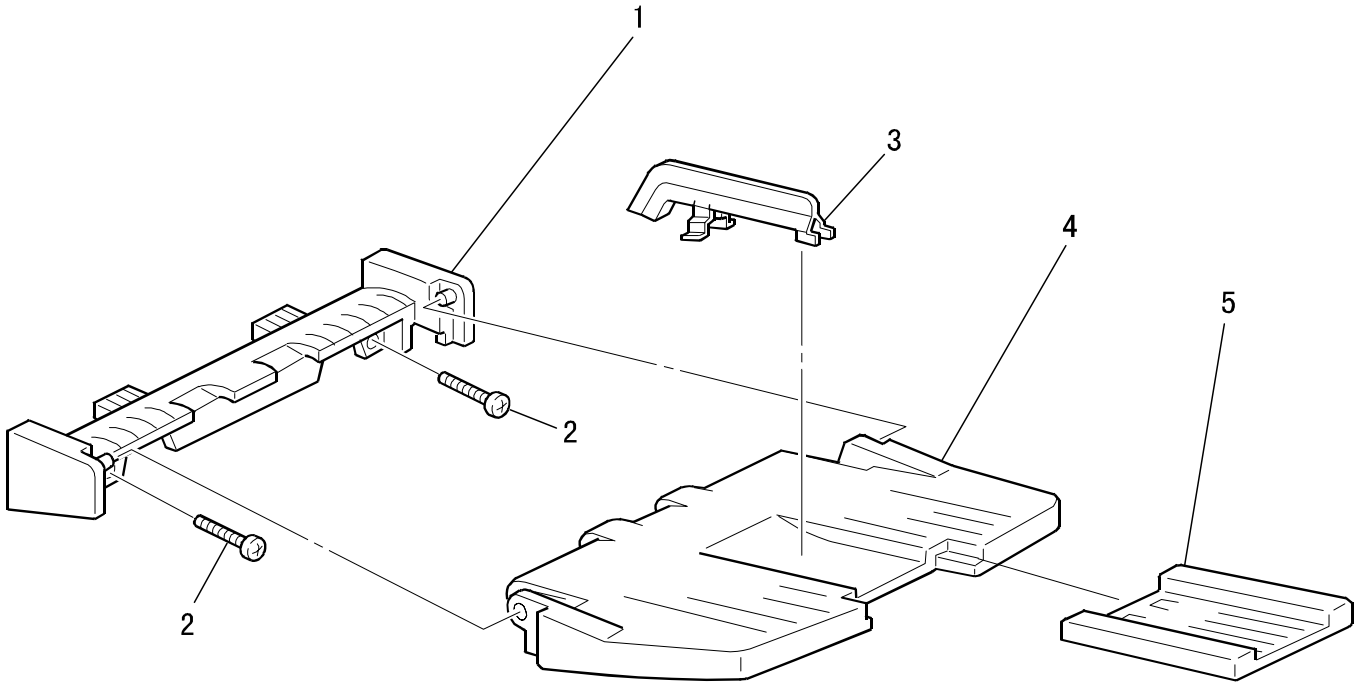

32.OPTION EXIT TRAY (A825)

Index No.	Part No.	Description	Q'ty Per Assembly
1	A680 4331	Exit Tray Holder	1
2	A680 4351	Screw - M4x17mm	2
3	A680 4332	Original Guide	1
4	A680 4321	Exit Tray	1
5	A666 2421	SUB - Shift Tray	1

Index No.	Part No.	Description	Q'ty Per Assembly

33.KEY COUNTER UNIT (A674)

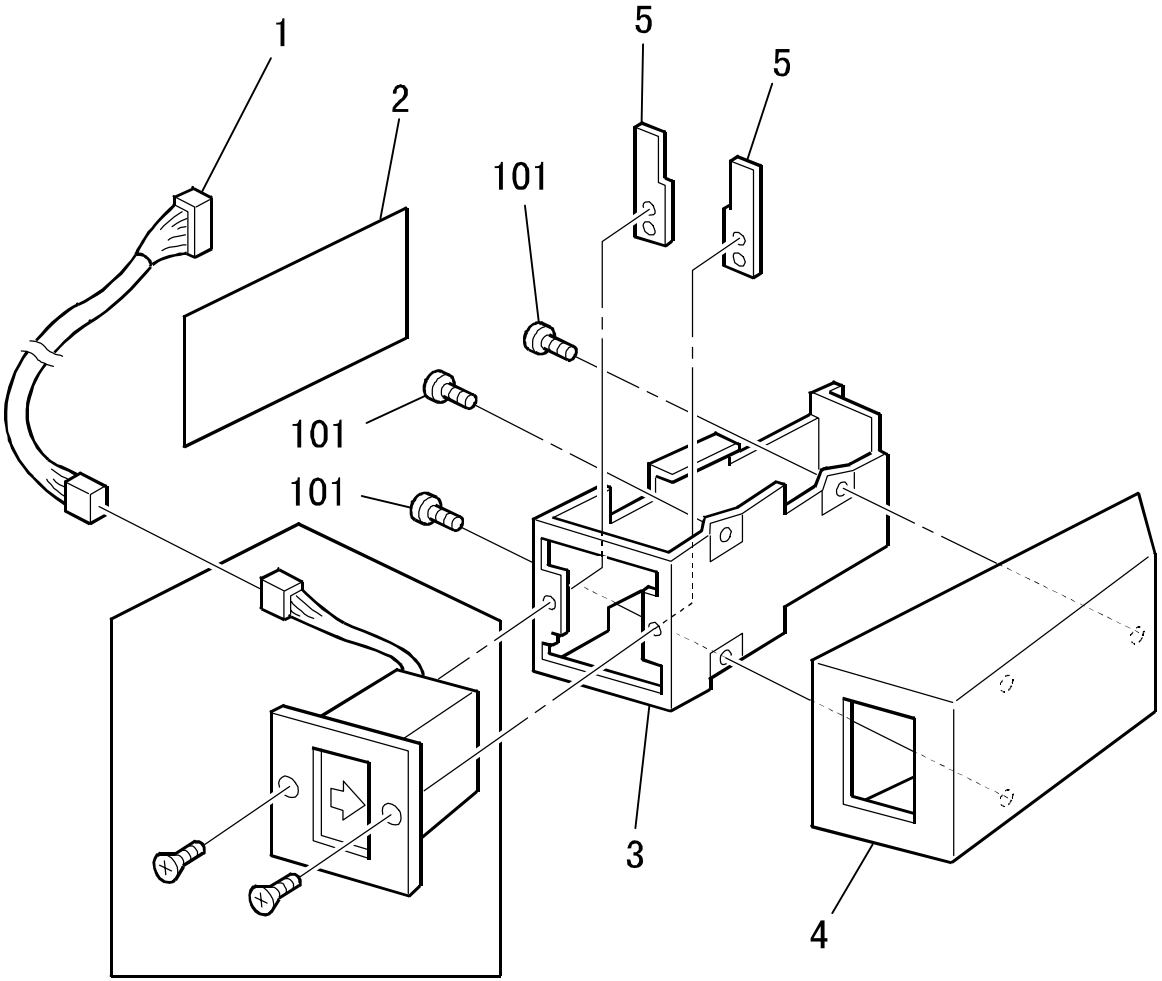

33.KEY COUNTER UNIT (A674)

Index No.	Part No.	Description	Q'ty Per Assembly
1	A674 5401	Key Counter Harness	1
2	A674 5810	Duplex Tape	1
3	A509 1055	Key Counter Bracket Ass'y	1
4	A598 1260	Key Counter Cover	1
5	A509 1063	Plate Nut	2

Index No.	Part No.	Description	Q'ty Per Assembly
101	0452 4008B	Tapping Screw - 3x8	

34.EXPANSION BOX (A692)

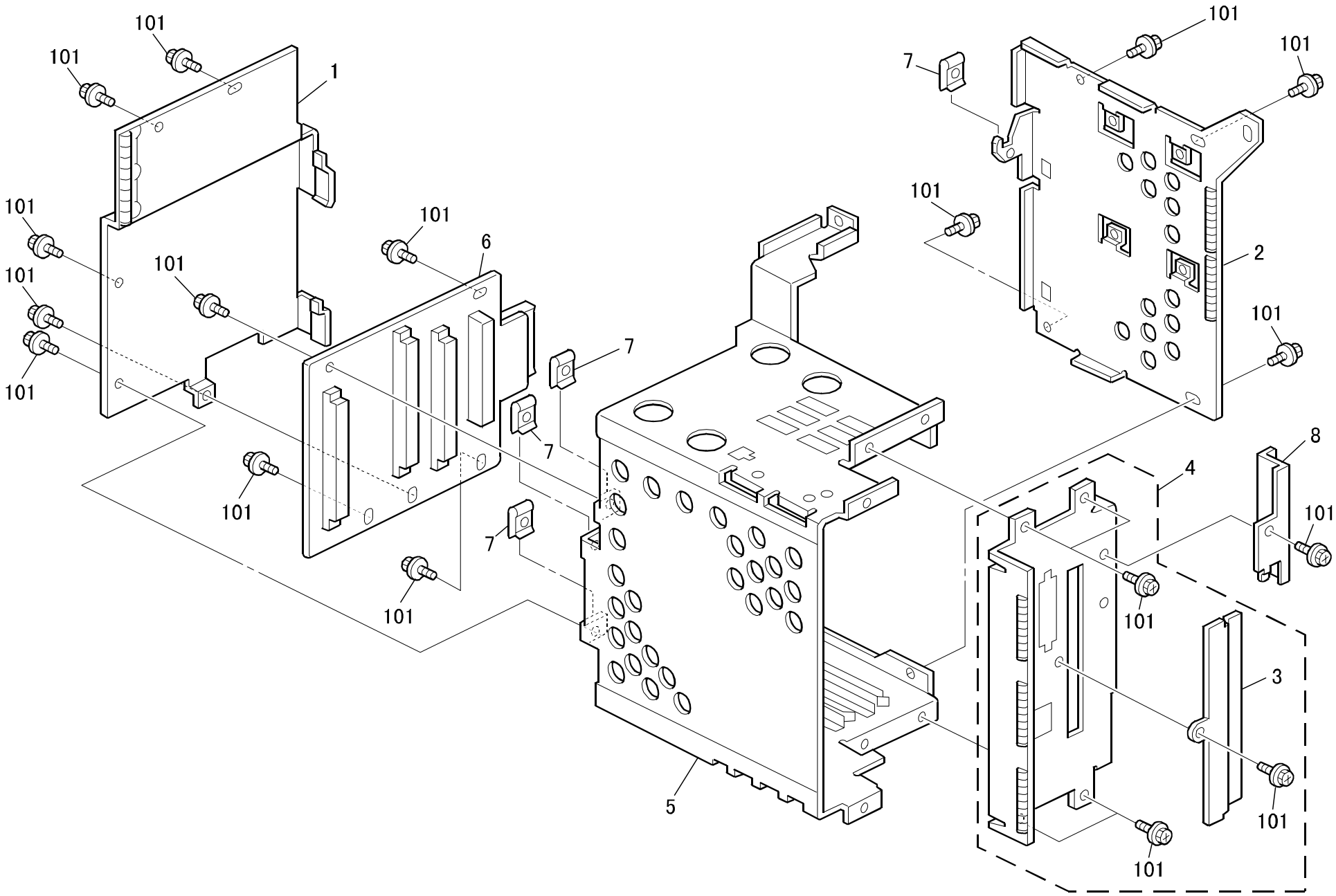

34.EXPANSION BOX (A692)

Index No.	Part No.	Description	Q'ty Per Assembly
1	A233 5865	Rear Cover	1
2	A233 5860	Front Stay	1
3	A233 5892	Fax Control Cover	1
4	A233 5890	Panel Rack Ass'y	1
5	A233 5871	Extention Rack	1
6	A233 5155	Extention Board	1
7	A232 1284	Spring holder	4
8	A233 5868	Grounding Plate	1

Index No.	Part No.	Description	Q'ty Per Assembly
101	0451 3006B	Tapping Screw - M3x6	

35.IOB BOARD(A230/A231/A232)

CAPACITOR

SYMBOL NO.	INDEX NO.
-----	----
-----	----
C103	190
C104	190
-----	----
-----	----
-----	----
C108	190
-----	----
C110	191

SYMBOL NO.	INDEX NO.
C111	190
C112	187
C113	190
-----	----
C115	187
C116	189
C117	189
C118	189
C119	190
C120	179

SYMBOL NO.	INDEX NO.
C121	181
C122	181
C123	180
-----	----
C125	190
C126	190
C127	190
C128	190
C129	190
C130	190

SYMBOL NO.	INDEX NO.
C131	190
C132	190
C133	190
C134	190
C135	190
C136	190
C137	190
C138	190
C139	190
C140	190

SYMBOL NO.	INDEX NO.
C141	190
C142	190
C143	190
C144	190
C145	190
C146	190
C147	190
C148	190
C149	191
C150	190

SYMBOL NO.	INDEX NO.
C151	191
-----	----
C153	190
C154	190
C155	190
C156	190
C157	190
C158	191
C159	190
C160	190

SYMBOL NO.	INDEX NO.
C161	190
C162	190
C163	190
C164	190
C165	190
C166	191
C167	190
C168	184
C169	191
C170	190

CAPACITOR

SYMBOL NO.	INDEX NO.
C171	190
C172	191
C173	190
C174	190
C175	190
C176	190
C177	184
C178	190
C179	190
C180	190

SYMBOL NO.	INDEX NO.
C181	190
C182	190
C183	190
C184	190
C185	190
C186	190
C187	187
C188	186
C189	187
-----	----

SYMBOL NO.	INDEX NO.
C191	191
C192	191
C193	191
C194	191
C195	191
C196	191
C197	191
C198	187
-----	----
-----	----

SYMBOL NO.	INDEX NO.
C201	190
-----	----
C203	187
C204	191
C205	191
-----	----
-----	----
-----	----
C209	187
C210	187

SYMBOL NO.	INDEX NO.
C211	191
C212	191
C213	191
C214	191
C215	191
C216	146
C217	190
C218	191
C219	190
C220	191

SYMBOL NO.	INDEX NO.
C221	191
-----	----
-----	----
C224	191
C225	190
C226	190

SYMBOL NO.	INDEX NO.
-----	----
-----	----
-----	----
C254	182
C255	182
C256	182
C257	182
C258	182
C259	182
-----	----

CAPACITOR

SYMBOL NO.	INDEX NO.
C261	183
-----	----
C263	188
C264	188
C265	188
C266	188
C267	182
C268	182
C269	185
C270	185

SYMBOL NO.	INDEX NO.
C271	190
C272	183

CONNECTOR

SYMBOL NO.	INDEX NO.
CN201	105
CN202	112
CN203	117
CN204	106
CN205	107
CN206	111
CN207	116
CN208	119
CN209	118
CN210	103

SYMBOL NO.	INDEX NO.
CN211	110
CN212	114
CN213	120
CN214	104
CN215	104
CN216	104
CN217	108
CN218	109
CN219	115
CN220	113

DA

SYMBOL NO.	INDEX NO.
DA101	128
DA102	128
DA103	125
DA104	125
DA105	125
DA106	128

DIODE

SYMBOL NO.	INDEX NO.
D102	126
D103	126
D104	126

FILTER

SYMBOL NO.	INDEX NO.
FIL101	147
FIL102	147
FIL103	147

IC

SYMBOL NO.	INDEX NO.
IC105	133
IC106	133
IC107	135
IC108	133
IC109	133
IC110	140
IC111	132
IC113	136
IC114	137
IC115	141

SYMBOL NO.	INDEX NO.
IC116	141
IC117	133
IC118	132
IC119	3
IC120	1
IC121	138
IC122	139

JP

SYMBOL NO.	INDEX NO.
JP101	170
JP102	168
JP103	152

OSC

SYMBOL NO.	INDEX NO.
OSC101	142
OSC102	142

Q

SYMBOL NO.	INDEX NO.
Q102	131
Q103	134
Q104	134
Q105	134
Q106	123
Q107	124
Q108	134

RESISTOR

SYMBOL NO.	INDEX NO.
-----	----
-----	----
-----	----
-----	----
-----	----
R116	152
R117	149
R118	152
R119	143
-----	----

SYMBOL NO.	INDEX NO.
R121	149
R122	152
R123	149
R124	176
R125	149
R126	153
R127	153
R128	178
R129	149
R130	165

SYMBOL NO.	INDEX NO.
R131	152
R132	149
R133	160
R134	149
R135	176
R136	149
R137	165
-----	----
R139	157
R140	167

35.IOB BOARD(A230/A231/A232)

RESISTOR

SYMBOL NO.	INDEX NO.
R141	152
-----	----
R143	152
R144	152
R145	159
R146	164
R147	172
R148	173
R149	153
R150	172

SYMBOL NO.	INDEX NO.
R151	172
-----	----
R153	152
R154	153
-----	----
R156	152
R157	172
R158	172
R159	152
-----	----

SYMBOL NO.	INDEX NO.
R161	166
R162	159
R163	152
R164	173
-----	----
R166	165
R167	167
R168	157
R169	152
R170	152

SYMBOL NO.	INDEX NO.
R171	153
R172	153
R173	150
R174	152
-----	----
R176	152
-----	----
R178	152
-----	----
R180	153

SYMBOL NO.	INDEX NO.
R181	154
-----	----
-----	----
-----	----
R185	173
R186	152
R187	162
R188	152
R189	159
R190	151

SYMBOL NO.	INDEX NO.
R191	152
-----	----
R193	153
R194	174
R195	174
R196	152
R197	175
R198	177
R199	167
R200	158

SYMBOL NO.	INDEX NO.
R201	153
R202	158
R203	157
R204	165
R205	171
R206	165
R207	152
R208	151
R209	151
R210	164

RESISTOR

SYMBOL NO.	INDEX NO.
R211	159
R212	152
R213	159
-----	----
R215	152
R216	169
R217	156
R218	148
R219	169
R220	152

SYMBOL NO.	INDEX NO.
R221	156
R222	152
R223	153
R224	165
R225	165
R226	153
R227	153
R228	152
R229	153
R230	153

SYMBOL NO.	INDEX NO.
R231	152
R232	152
R233	153
R234	165
-----	----
-----	----
-----	----
R238	156
R239	152
-----	----

SYMBOL NO.	INDEX NO.
R241	156
R242	152
R243	152
R244	152
-----	----
-----	----
-----	----
-----	----
R249	152
-----	----

SYMBOL NO.	INDEX NO.
R251	165
R252	165
R253	163
R254	155
R255	162
R256	153
R257	153
R258	163
R259	162
R260	155

SYMBOL NO.	INDEX NO.
R261	155
R262	163
R263	162
R264	153
R265	143
R266	153
-----	----
R268	161
R269	161

RN

SYMBOL NO.	INDEX NO.
-----	----
-----	----
RN103	145
RN104	145
RN105	145
RN106	145
RN107	145
RN108	145
RN109	144
RN110	144

35.IOB BOARD(A230/A231/A232)

RN

SYMBOL NO.	INDEX NO.
RN111	144
RN112	144
-----	----
-----	----
-----	----
RN116	145
RN117	144
RN118	144
RN119	145
RN120	144

SYMBOL NO.	INDEX NO.
-----	----
RN122	145
RN123	145
RN124	145
RN125	145
RN126	144
-----	----
RN128	145
RN129	145
RN130	144

SYMBOL NO.	INDEX NO.
RN131	145
RN132	144
RN133	144
RN134	144
RN135	145
RN136	144
RN137	145
RN138	145
RN139	145
RN140	145

SYMBOL NO.	INDEX NO.
-----	----
RN142	144
-----	----
RN144	144
RN145	144
RN146	145
RN147	145
RN148	145
RN149	144

SW

SYMBOL NO.	INDEX NO.
SW101	122

TB

SYMBOL NO.	INDEX NO.
TB101	102
TB101	121

TP

SYMBOL NO.	INDEX NO.
TP103	101
TP104	101
TP136	101
TP154	101
TP156	101
TP158	101
TP159	101

V

SYMBOL NO.	INDEX NO.
V101	130
V102	130

ZD

SYMBOL NO.	INDEX NO.
ZD101	127
ZD103	127
ZD104	127
ZD105	129
ZD106	127

35.IOB BOARD(A230/A231/A232)

Index No.	Part No.	Description	Q'ty Per Assembly
*	A232 5125	IOB Board	1
1	A232 5355	IC GATEX	1
2	A232 5370	MPU CSS ROM	1
3	A232 5371	MPU CSS	1



Index No.	Part No.	Description	Q'ty Per Assembly
101	1101 0328	Connector Pin ContactT	
102	1102 2452	Terminal Block - 3P	
103	1102 3822	Connector - 20P	
104	1102 4872	CT Header - 6P	
105	1102 5306	Connector - 7P	
106	1102 6297	Connector - 4P	
107	1102 6299	Connector - 6P	
108	1102 6301	Connector - 8P	
109	1102 6305	Connector - 12P	
110	1102 6311	Connector - 4P	
111	1102 6334	Connector - 3P	
112	1102 6337	Connector - 6P	
113	1102 6340	Connector - 9P	
114	1102 6341	Connector - 10P	
115	1102 6342	Connector - 11P	
116	1102 6395	Connector - 1P	
117	1102 6400	Connector - 2P	
118	1102 6401	Connector - 2P	
119	1102 6896	Connector - 50P	
120	1102 7700	Connector - 50P	
121	1103 1878	Receptacle - 9067	
122	1204 1537	Dip Switch	
123	1400 0556	Transistor - DTB143EK	
124	1400 0558	Transistor - 2SD780	
125	1402 0478	Diode - 1SS226TE85L	
126	1402 0942	Diode - 1SS193	
127	1402 1037	Diode - U1ZB12	
128	1402 1122	Diode - MA159A	
129	1402 1380	Diode - PTZ6.2A	
130	1404 0238	Serge Absorber 22V 0.6J	
131	1407 1535	IC - TD62308AP	
132	1407 1596	TTLIC SN74LS14NS	
133	1407 2187	TTLIC SN74LS07NS	
134	1407 2219	IC - TD62003AP	
135	1407 3281	IC - TC74HCU04AF	

Index No.	Part No.	Description	Q'ty Per Assembly
136	1407 3290	IC - TC74HC02AF	
137	1407 3380	HS-C2MOS - TC74HCT04AF	
138	1407 4114	HS-C2MOS - TC74HCT04AF	
139	1408 0770	IC - L293D	
140	1408 0877	Comparator - LM339NS	
141	1408 0920	Opeamp - NJM2902E	
142	1503 0261	Oscillator - 9.8304MHZ	
143	1600 1178	Resistor Array - 330Ω ±5% 1W	
144	1601 7800	Resistor Array - 1KΩ ±5% 1/16W	
145	1601 7801	Resistor Array - 10KΩ ±5% 1/16W	
146	1604 2601	Condensor - 47mF ±20% 25V	
147	1607 1002	Filter - NFM60R30T222	
148	1630 1121	Resistor - 120Ω±5% 1/8W	
149	1630 1221	Resistor - 220 Ω ±5% 1/4W	
150	1630 2221	Resistor - 220 Ω	
151	1630 3100	Resistor - 10 Ω ±5% 1/10W	
152	1630 3102	Resistor - 1KΩ 1/10W ±5%	
153	1630 3103	Resistor - 10KΩ 1/10W ±5%	
154	1630 3105	Resistor - 1M Ω ±5% 1/10W	
155	1630 3152	Resistor - 1.5KΩ - 1/10W	
156	1630 3154	Resistor - 150K 0HM ±5% 1/10W	
157	1630 3161	Resistor - 160Ω 1/10W ±5%	
158	1630 3204	Resistor - 200K Ω 1/10W ±5%	
159	1630 3222	Resistor - 2.2KΩ 1/10W ±5%	
160	1630 3223	Resistor - 22KΩ - 1/10W	
161	1630 3330	Resistor - 33 Ω ±5% 1/10W	
162	1630 3332	Resistor - 3.3KΩ 1/10W ±5%	
163	1630 3362	Resistor - 3.6K Ω ±5% 1/10W	
164	1630 3471	Resistor - 470Ω - 1/10W	
165	1630 3472	Resistor - 4.7KΩ 1/10W ±5%	
166	1630 3511	Resistor - 510 Ω ±5% 1/10W	
167	1630 3562	Resistor - 5.6K Ω +5% 1/10W	
168	1630 3681	Resistor - 680 Ω ±5% 1/10W	

Index No.	Part No.	Description	Q'ty Per Assembly
169	1630 3752	Resistor - 7.5K Ω ±5% 1/10W	
170	1631 0000	Resistor - 0 Ω 1/4W	
171	1631 1000	Resistor -100 Ω ±1% 1/4W	
172	1633 1003	Resistor - 100K Ω ±1% 1/10W	
173	1633 1403	Resistor - 140K Ω ±1% 1/10W	
174	1633 2402	Resistor - 24K Ω ±1% 1/10W	
175	1633 4641	Resistor - 4.6K Ω ±1% 1/10W	
176	1633 5231	Resistor - 5.23K Ω ±1% 1/10W	
177	1633 5621	Resistor - 6.2K Ω ±1% 1/10W	
178	1633 7150	Resistor - 715 Ω ±1% 1/10W	
179	1640 2470	Capacitor - 47µF±20% 25V	
180	1640 5101	Capacitor - 100µF±20% 50V	
181	1640 5470	Capacitor - 47µF±20% 50V	
182	1660 3101	Capacitor - 100pF 50V	
183	1660 3102	Capacitor - 1000pF ±5% 50V	
184	1660 3220	Capacitor - 122pF ±5% 50V	
185	1660 3270	Capacitor - 27pF ±5% 50V	
186	1660 3331	Capacitor - 330pF ±5% 50V	
187	1660 3471	Capacitor - 470pF 50V	
188	1660 3820	Capacitor - 82pF ±5% 50V	
189	1660 5472	Capacitor - 4700pF 50V	
190	1660 7103	Capacitor - 10000pF 50V	
191	1660 7104	Capacitor - 100000pF 50V	

36.BICU BOARD(A230/A231/A232)

CAPACITOR

SYMBOL NO.	INDEX NO.	SYMBOL NO.	INDEX NO.	SYMBOL NO.	INDEX NO.	SYMBOL NO.	INDEX NO.	SYMBOL NO.	INDEX NO.	SYMBOL NO.	INDEX NO.	SYMBOL NO.	INDEX NO.
C101	181	C111	146	C121	188	C131	191	C141	190	C151	183	C161	191
C102	180	C112	146	C122	191	C132	190	C142	183	C152	191	C162	191
C103	191	C113	190	C123	190	C133	191	C143	185	C153	183	C163	191
C104	185	C114	191	C124	191	C134	191	C144	183	C154	191	C164	190
C105	185	C115	191	C125	191	C135	191	C145	185	C155	191	C165	191
C106	180	C116	190	C126	191	C136	191	C146	183	C156	191	C166	187
C107	191	C117	191	C127	190	C137	191	C147	190	C157	191	C167	191
C108	191	C118	190	C128	188	C138	190	C148	183	C158	190	C168	191
C109	179	C119	188	C129	191	C139	191	C149	183	C159	191	C169	191
C110	144	C120	190	C130	191	C140	191	C150	190	C160	191	-----	----

CAPACITOR

SYMBOL NO.	INDEX NO.	SYMBOL NO.	INDEX NO.	SYMBOL NO.	INDEX NO.	SYMBOL NO.	INDEX NO.	SYMBOL NO.	INDEX NO.	SYMBOL NO.	INDEX NO.	SYMBOL NO.	INDEX NO.
C171	191	C181	191	C191	190	-----	----	C211	183	C221	186	C231	186
C172	191	C182	190	C192	190	C202	183	C212	147	C222	186	C232	183
C173	191	C183	190	C193	183	C203	183	C213	147	C223	183	C233	183
C174	191	C184	145	C194	190	C204	183	C214	147	C224	186	C234	183
C175	188	C185	190	C195	191	C205	183	C215	147	C225	184	C235	183
C176	191	C186	191	C196	183	C206	183	C216	186	C226	184	C236	183
C177	188	C187	180	C197	183	C207	186	C217	183	C227	184	C237	183
C178	188	-----	----	C198	183	C208	186	C218	183	C228	184	C238	183
C179	190	C189	183	C199	186	C209	183	C219	183	C229	186	C239	183
C180	190	C190	183	C200	190	C210	190	C220	190	C230	186	C240	183

36.BICU BOARD(A230/A231/A232)

CAPACITOR

SYMBOL NO.	INDEX NO.
C241	183
C242	183
C243	183
C244	183
C245	183
C246	183
C247	184
C248	186
C249	186
C250	184

SYMBOL NO.	INDEX NO.
C251	184
C252	184
C253	184
C254	184
C255	184
C256	184
C257	184
C258	184
C259	184
C260	184

SYMBOL NO.	INDEX NO.
C261	184
C262	186
C263	186
C264	186
C265	186
-----	----
C267	190
C268	190
C269	184
C270	184

SYMBOL NO.	INDEX NO.
C271	184
C272	184
C273	184
C274	184
C275	184
C276	184
C277	191
C278	186
C279	182
C280	189

SYMBOL NO.	INDEX NO.
C281	189
C282	189

CONNECTOR

SYMBOL NO.	INDEX NO.
CN301	102
CN302	109
CN303	106
CN304	110
CN307	105
CN308	104
CN310	107
CN311	112
CN312	103
CN313	108

DIODE

SYMBOL NO.	INDEX NO.
D101	116
D102	116
D103	116
D104	116

FILTER

SYMBOL NO.	INDEX NO.
FIL101	149
FIL102	149
FIL103	149
FIL104	149
FIL105	149
FIL106	149
FIL107	149
FIL108	149
FIL109	149
FIL110	149

SYMBOL NO.	INDEX NO.
FIL111	149
FIL112	149
FIL113	149
FIL114	148
FIL115	148
FIL116	149
FIL117	149
FIL118	148
FIL119	148
FIL120	149

SYMBOL NO.	INDEX NO.
-----	----
FIL122	149
-----	----
FIL124	151
FIL125	149
-----	----
FIL127	154
FIL128	152
FIL129	154
FIL130	154

SYMBOL NO.	INDEX NO.
-----	----
FIL132	155
FIL133	155
-----	----
FIL135	156
-----	----
FIL137	148
FIL138	148
FIL139	153
FIL140	153

SYMBOL NO.	INDEX NO.
FIL141	156
FIL142	156
FIL143	156
FIL144	150
FIL145	150
FIL146	157

IC

SYMBOL NO.	INDEX NO.
IC101	123
IC102	121
IC103	193
IC104	121
IC105	3
IC106	193
IC107	4
IC108	192
IC109	127
IC110	127

SYMBOL NO.	INDEX NO.
IC111	111
IC112	129
-----	----
IC114	2
IC115	131
IC116	128
IC117	124
IC118	132
IC119	122
IC120	121

36.BICU BOARD(A230/A231/A232)

IC

SYMBOL NO.	INDEX NO.
IC121	124
IC122	124
IC123	124
IC124	124
IC125	125
-----	----
IC127	126
IC128	126
IC129	130

LED

SYMBOL NO.	INDEX NO.
LED101	119
LED102	120

OSC

SYMBOL NO.	INDEX NO.
OSC101	135
OSC102	134
OSC104	136

Q

SYMBOL NO.	INDEX NO.
Q101	114
Q102	113
Q103	113
Q104	113
Q105	114
Q106	115
Q107	115

REG

SYMBOL NO.	INDEX NO.
REG101	133

RESISTOR

SYMBOL NO.	INDEX NO.
-----	----
R102	170
R103	170
R104	170
R105	170
R106	170
R107	170
R108	170
R109	170
R110	170

SYMBOL NO.	INDEX NO.
R111	171
R112	171
R113	170
R114	170
R115	171
R116	170
R117	171
R118	170
R119	171
R120	170

SYMBOL NO.	INDEX NO.
-----	----
-----	----
R123	163
R124	165
R125	175
R126	163
R127	162
R128	173
R129	174
R130	162

RESISTOR

SYMBOL NO.	INDEX NO.
R131	162
R132	162
R133	162
R134	162
R135	163
R136	162
R137	170
R138	176
-----	----
R140	170

SYMBOL NO.	INDEX NO.
-----	----
-----	----
R143	170
R144	164
-----	----
R146	170
R147	162
R148	162
R149	167
R150	167

SYMBOL NO.	INDEX NO.
R151	159
R152	159
R153	162
R154	162
R155	162
R156	158
R157	162
R158	162
R159	173
R160	168

SYMBOL NO.	INDEX NO.
R161	163
R162	170
-----	----
-----	----
R165	161
-----	----
R167	163
R168	170
-----	----
R170	170

SYMBOL NO.	INDEX NO.
R171	163
R172	170
R173	170
R174	162
R175	171
R176	170
R177	159
R178	163
R179	163
R180	163

SYMBOL NO.	INDEX NO.
R181	163
R182	170
R183	162
R184	163
R185	162
R186	163
R187	159
R188	163
R189	159
-----	----

SYMBOL NO.	INDEX NO.
R191	162
R192	162
R193	162
R194	162
R195	170
R196	162
R197	162
R198	162
R199	162
R200	162

36.BICU BOARD(A230/A231/A232)

RESISTOR

SYMBOL NO.	INDEX NO.
R201	170
R202	163
R203	162
R204	170
R205	170
R206	162
R207	170
R208	171
R209	170
R210	171

SYMBOL NO.	INDEX NO.
R211	170
R212	162
R213	170
R214	170
R215	170
R216	170
R217	174
R218	173
R219	170
R220	162

SYMBOL NO.	INDEX NO.
R221	163
R222	170
R223	167
R224	172
R225	163
R226	165
R227	171
R228	173
R229	163
R230	163

SYMBOL NO.	INDEX NO.
R231	173
R232	163
R233	163
R234	170
R235	163
R236	163
R237	173
R238	176
R239	162
R240	162

SYMBOL NO.	INDEX NO.
R241	173
-----	----
R243	162
R244	163
R245	163
R246	163
R247	170
R248	163
R249	163
R250	163

SYMBOL NO.	INDEX NO.
R251	173
R252	163
R253	162
R254	163
R255	173
R256	162
R257	162
R258	163
R259	163
R260	163

SYMBOL NO.	INDEX NO.
R261	163
R262	163
R263	163
R264	163
R265	163
R266	163
R267	170
R268	163
R269	177
R270	178

RESISTOR

SYMBOL NO.	INDEX NO.
R271	161
R272	167
R273	161
R274	161
R275	163
R276	163
R277	161
R278	173
R279	173
-----	----

SYMBOL NO.	INDEX NO.
R281	170
-----	----
-----	----
R284	169
-----	----
R286	166
R287	174
-----	----
-----	----
-----	----

SYMBOL NO.	INDEX NO.
R291	170
R292	173
R293	173
R294	170
R295	170
-----	----
-----	----
-----	----
-----	----

SYMBOL NO.	INDEX NO.
R301	162
R302	162
R303	162
-----	----
R305	173
-----	----
R307	170
-----	----
R309	170
R310	173

SYMBOL NO.	INDEX NO.
R311	173
R312	170
R313	162
R314	170
R315	163
R316	163
R317	163
-----	----
R319	163
-----	----

SYMBOL NO.	INDEX NO.
R321	163
R322	163
R323	162
R324	162
R325	174
-----	----
R327	170
R328	160
R329	160
R330	160

SYMBOL NO.	INDEX NO.
R331	160

36.BICU BOARD(A230/A231/A232)

RN

SYMBOL NO.	INDEX NO.
RN101	139
RN102	141
RN103	139
RN104	141
RN105	140
RN106	140
RN107	137
RN108	140
RN109	140
RN110	143

SYMBOL NO.	INDEX NO.
RN111	140
RN112	140
-----	----
-----	----
RN115	141
RN116	140
RN117	141
RN118	140
RN119	141
RN120	140

SYMBOL NO.	INDEX NO.
RN121	141
RN122	140
RN123	140
RN124	140
RN125	139
RN126	139
RN127	139
RN128	139
RN129	143
RN130	142

SYMBOL NO.	INDEX NO.
RN131	142
RN132	142
RN133	142
RN134	138
RN135	140

TP

SYMBOL NO.	INDEX NO.
TP103	101
TP145	101

ZD

SYMBOL NO.	INDEX NO.
ZD101	118
ZD105	117
ZD106	117

36.BICU BOARD(A230/A231/A232)

Index No.	Part No.	Description	Q'ty Per Assembly
*	A232 5051	BICU Board (115V)	1
*	A232 5052	BICU Board (230V)	1
*	A232 5053	BICU Board (Asia)	1
1	A232 5100	PCB N-BICU EXP	1
2	A232 5230	IC - NIPU M66384FP	1
3	A232 5251	IC - IMAC RF5C289	1
4	A232 5350	IC - HG71C103FD	1
5	A230 9099	NVRAM - Minus Counter	1

Index No.	Part No.	Description	Q'ty Per Assembly
101	1101 0328	Connector Pin Contact	
102	1102 5304	Connector - 5P	
103	1102 6297	Connector - 4P	
104	1102 7132	Card Slot - 68p	
105	1102 7196	Connector - 50P	
106	1102 7389	Connector - FH12-50S-0.5SV	
107	1102 7456	Connector 176125-5	
108	1102 7692	Connector - WR-120S-VFH30-1	
109	1102 7701	Connector - 50P	
110	1102 7702	Connector - 60P	
111	1104 0588	Dip Socket - 28p	
112	1104 0739	Simm Socket 72p	
113	1400 0392	Transistor - DTC114EK	
114	1400 0398	Transistor - 2SC2412K	
115	1400 0459	Transistor - DTC143XKA	
116	1402 0477	Silicon Diode - 1SS187	
117	1402 1345	Diode - UDZ3.6B	
118	1402 1380	Diode - PTZ 6.2A	
119	1403 0828	Diode - SEC1901C	
120	1403 0829	Diode - SEC1201C	
121	1407 2143	TTLIC - 74F244SJ	
122	1407 2187	TTLIC - SN74LS07NS	
123	1407 2218	TTLIC - SN74LS06NS	
124	1407 3008	TTL - SN74ALS244CNS	
125	1407 3021	TTL SN74ALS139NS	
126	1407 3206	IC - TC7S32F	
127	1407 4322	IC - TD74ABT374F	
128	1407 4755	IC - MBM29F800T-12pFTN	
129	1407 4771	CPU MC68334GFC16	
130	1407 5009	CMOS TC7SET04FU	
131	1407 5031	IC - MBM29F400TA-90pFTN	
132	1408 0575	IC - M51957BFP	
133	1408 1266	Regulator - LT1086CM-3.3	
134	1503 0460	Oscillator - 32.768KHZ	
135	1503 0784	Oscillator - MA-406 19.6608M	

Index No.	Part No.	Description	Q'ty Per Assembly
136	1503 0813	Oscillator - 40MHZ	
137	1601 7724	Resistor - 680 Ω MNR14J681	
138	1601 7800	Resistor Array - 1KΩ ±5% 1/16W	
139	1601 7801	Resistor Array - 10KΩ ±5% 1/16W	
140	1601 7805	Resistor Array - 33 Ω ±5% 1/16W	
141	1601 7807	Registor Array -3.3k Ω -5% 1/16W	
142	1601 7808	Registor Array - 4.7K Ω ±5% 1/16W	
143	1601 7809	Registor Array - 2.2K Ω ±5% 1/16W	
144	1604 4333	Capacitor - 100µF±20% 10V	
145	1605 0577	Capacitor - 0.33µF+80-20%	
146	1605 0847	Capacitor - 7PF ±0.5pF 50V	
147	1605 0869	Capacitor - 820pF ±10%	
148	1607 0280	Inductor - Blm41	
149	1607 0732	Noise Filter - AEF321825-470	
150	1607 0847	Data Line Filter - ACB1608H-300	
151	1607 0927	Filter - ACF321825-220	
152	1607 1004	Filter - ACF321825-151	
153	1607 1017	Filter - MMZ1608R301A	
154	1607 1022	Filter - MMZ1608Y301B	
155	1607 1023	Filter - MZA3216Y301B	
156	1607 1031	Filter - ACB1608L-060	
157	1607 1044	Filter - MMZ1608S102A	
158	1630 3471	Resistor - 470Ω - 1/10W	
159	1630 3511	Resistor - 510 Ω ±5% 1/10W	
160	1630 4100	Resistor - 10 Ω ±5% 1/16W	
161	1630 4101	Resistor - 100 Ω ±5% 1/16W	
162	1630 4102	Resistor - 1.0KΩ ±5% 1/16W	
163	1630 4103	Resistor - 10KΩ ±5% 1/16W	
164	1630 4105	Resistor - 1.0MΩ ±5% 1/16W	
165	1630 4106	Resistor - 10M Ω ±5% 1/16W	
166	1630 4151	Registor - 150 Ω ±5% 1/16w	
167	1630 4222	Registor - 2.2k Ω - ±5%	
168	1630 4223	Registor - 22k Ω - ±5% - 1/16w	

Index No.	Part No.	Description	Q'ty Per Assembly
169	1630 4301	Resistor - 300 Ω ±5% 1/10W	
170	1630 4330	Resistor - 33 Ω ±5% 1/8W	
171	1630 4332	Resistor - 3.3K Ω ±5% 1/16W	
172	1630 4334	Resistor - 330K Ω ±5% 1/16W	
173	1630 4472	Resistor - 4.7KΩ ±5% 1/16W	
174	1630 4680	Resistor - 68 Ω ±5% 1/16W	
175	1630 4681	Resistor - 680 Ω ±5% 1/16W	
176	1630 4751	Resistor - 750 Ω ±5.00% 1/16W	
177	1634 1002	Resistor - 10 Ω ±5% 1/16W	
178	1634 3921	Resistor - 3.92KΩ ±1% 1/1	
179	1644 0100	Capacitor - 10µF±20% 10V	
180	1644 0470	Capacitor - 47µF±20% 10V	
181	1644 5100	Capacitor - 10µF±20% 50V	
182	1660 0100	Capacitor - 10PF ±0.5pF 50V	
183	1660 2101	Capacitor - 100pF - ±10% - 50V	
184	1660 2150	Capacitor - 15pF ±5% 50V	
185	1660 2220	Capacitor - 22pF ±20% 35V	
186	1660 2330	Capacitor - 33pF - ±5% - 50V	
187	1660 2470	Capacitor - 47pF ±5% 50V	
188	1660 4102	Capacitor - 1000pF ±10% 50V	
189	1660 4222	Capacitor - 2200pF - ±10% - 50V	
190	1660 6103	Capacitor - 10000pF - +80%-20%, 50V	
191	1660 8104	Capacitor - 0.1µF+80-20% 25V	
192	1901 0022	IC - Dram - 4M - 256X16 - 70NS	
193	1903 0014	IC - 16M 1MX16 60NS G2	

37.DECAL AND DOCUMENT (A230/A231/A232)

1



2



3

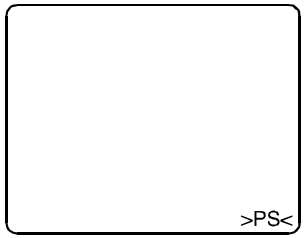

4



5

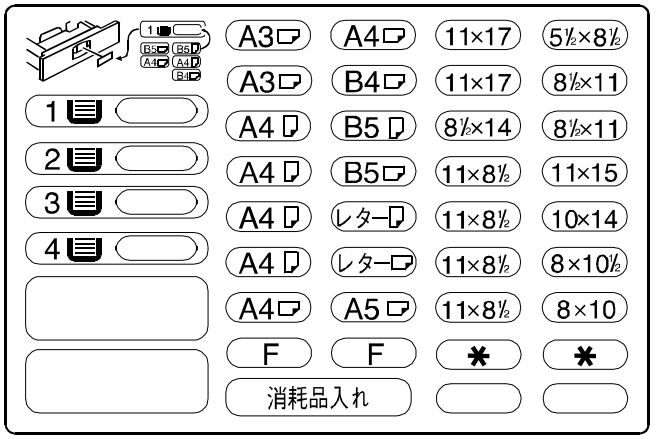

6

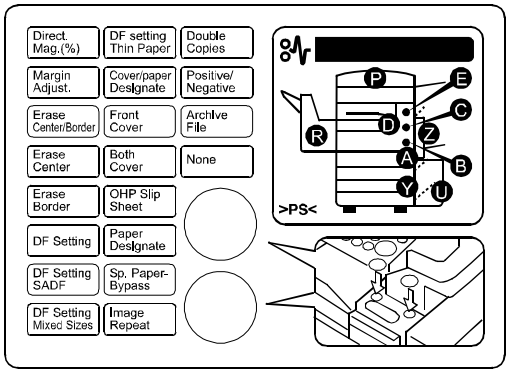

7

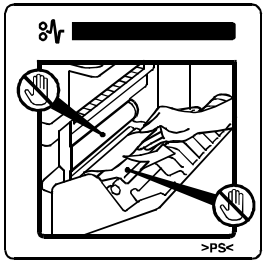

8

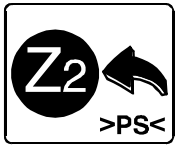

9

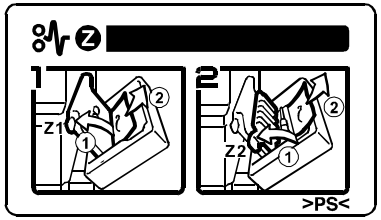

10

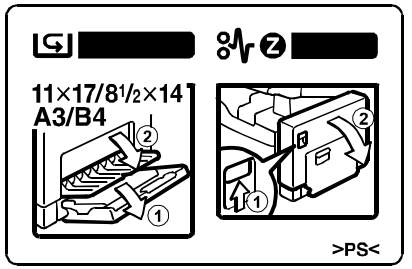

11



12

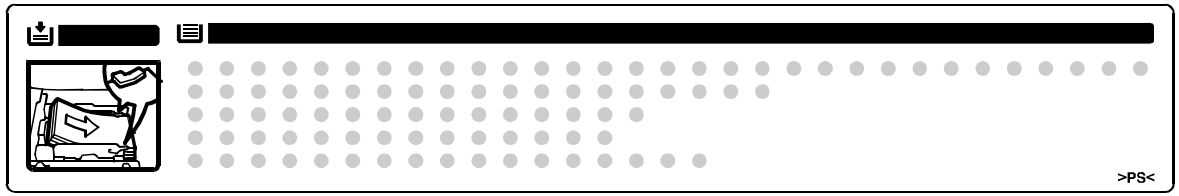

13



16

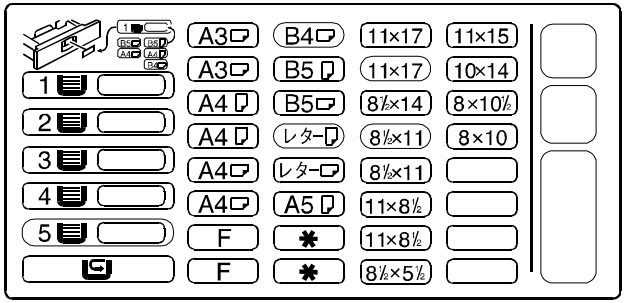

14



15

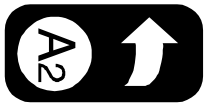

17

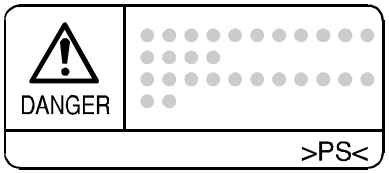

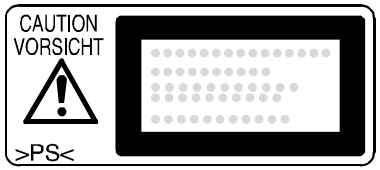

37.DECAL AND DOCUMENT (A230/A231/A232)

Index No.	Part No.	Description	Q'ty Per Assembly
1	A190 4476	Decal - High Temperature	1
2	A193 7425	Decal - High Temperature	1
3	A232 1381	Decal - Total Counter	1
4	A232 1383	Decal - Right Scanner Cover	1
5	A232 1385	Decal - Indication	1
6	A232 7380	Option Decal - Sub-unit LT	1
6	A232 7780	Option Decal - Sub-unit A4	1
7	A232 3991	Decal - Shield Cover	1
8	A232 4851	Decal - Jam Removal	1
9	A232 4852	Jam Removal Decal - Duplex	1
10	A232 4853	Upper Decal - Duplex Unit	1
11	A232 6073	Decal - By-pass Feed	1
12	AA00 3002	Decal - Add Paper	1
13	AA00 0204	Decal - Right Lower Cover	1
14	AA00 1392	Decal - A1	1
15	AA00 1393	Decal - A2	1
16	AA00 2209	Decal - Paper Size	1
17	G020 1917	Decal - LD (230V)	1
17	G020 1920	Decal - Laser Diode (115V)	1
18	A230 8607	Systeminstructions Guide - English (LT)	1
18	A230 8608	Systeminstructions Guide - English (Asia)	1
18	A230 8690	Systeminstructions Guide - English (A4)(NRG)	1
18	A230 8697	Systeminstructions Guide - English (LT)(GES)	1
19	A231 8607	Copy Instruction Guide (A4)	1
19	A231 8608	Copy Instruction Guide (Asia)	1
19	A231 8690	Copy Instruction Guide (A4)(NRG)	1
19	A231 8697	Copy Instruction Guide (LT)(GES)	1
20	A232 8607	Quick Guide - LT English	1
20	A232 8608	Quick Guide - EU English (Asia)	1
20	A232 8690	Quick Guide - EU English (NRG)	1

Index No.	Part No.	Description	Q'ty Per Assembly

38.SPECIAL TOOLS (A230/A231/A232)

1 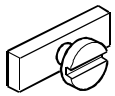	2 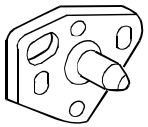	3 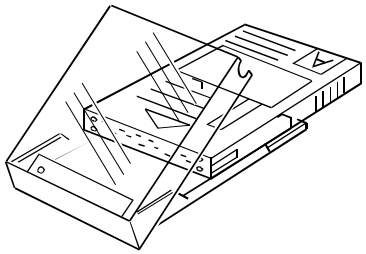	4 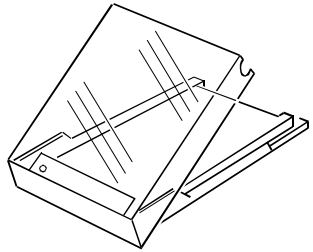	5 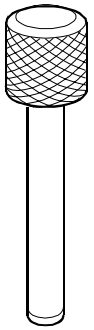
6 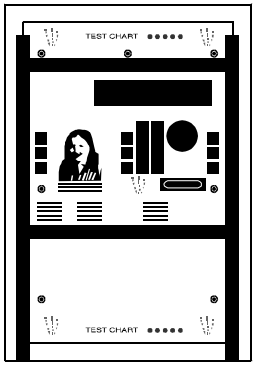	7 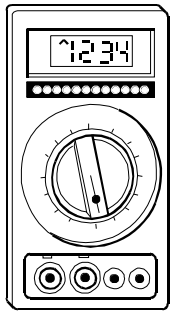	8 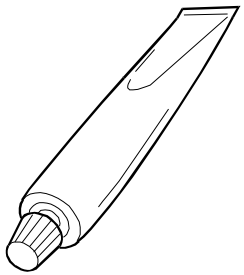	9 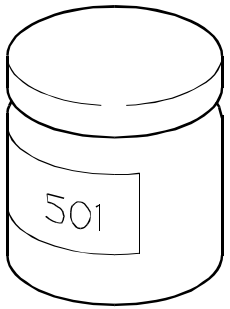	

38.SPECIAL TOOLS (A230/A231/A232)

Index No.	Part No.	Description	Q'ty Per Assembly
1	A230 9004	Positioning Pin Laser Unit	1
2	A230 9003	Adjusting Cam - Laser Unit	1
3	A230 9352	Flash Memory Card - 4MB	1
4	A230 9351	Case - Flash Memory Card	1
5	A006 9104	Adjusting Scanner Pin (4pcs/set)	1
6	5420 9516	Test Chart - OS - A3 (10pcs/set)	1
7	A029 9387	Digital Multimeter - FLUKE87	1
8	A028 9300	Grease Barrierta JFE 55/2	1
9	5203 9501	Grease 501	1

Index No.	Part No.	Description	Q'ty Per Assembly

PARTS INDEX

PM Parts Index

Section Name	Part No.	Description in Service Manual	Description in Parts Catalog	Q'ty Per Assembly	Page and Index No
BY-PASS FEED UNIT 2 (A689)	AF03 0036	Pick Up Roller (By-pass)	Pick Up Roller	1	27- 22
	AF03 1036	Feed Roller (By-pass)	Feed Roller	1	27- 40
	AF03 2036	Separation Roller (By-pass)	Separation Roller	1	27- 2
PAPER FEED SECTION	AF03 0035	Pick-up Roller (Paper Tray)	Pick-up Roller	1	29- 1
(A230/A231/A232)	AF03 1035	Feed Roller (Paper Tray)	Feed Roller	1	29- 6
	AF03 2035	Separation Roller (Paper Tray)	Separation Roller	1	29- 36
PCU UNIT 2 (A230/A231/A232)	A232 2301	Cleaning Pad - Charge Roller	Cleaning Pad	1	39- 13
	A232 2353	Drum Cleaning Blade	Cleaning Blade Ass'y	1	39- 22
	AD02 5021	Pick-off Pawl	Pick-off Pawl	2	39- 3
	AD02 7006	Charge Roller	Charge Roller	1	39- 26
TRANSFER UNIT 1 (A230/A231/A232)	A232 3880	Transfer Belt	Transfer Belt	1	41- 23
	A232 3930	Transfer Belt Cleaning Blade	Cleaning Blade - Transfer Belt	1	41- 21
DEVELOPMENT UNIT (A230/A231/A232)	AA01 2102	Development Filter	Development Filter	1	45- 15
FUSING UNIT (A230/A231/A232)	AE01 1041	Hot Roller	Hot Roller	1	47- 17
	AE02 0074	Pressure Roller	Pressure Roller - M30	1	47- 22
	AE04 4022	Hot Roller Strippers	Hot Roller Strippers	2	47- 6

Part No.	Description	Page and Index No.
A230 1272	Right Rear Cover (A230)	11- 26
A230 1891	LD Unit (A230/A231)	23- 26
A230 2520	Heat Sink - Heater	67- 15
A230 2525	Stopper - Heater	67- 16
A230 2857	Cover - Vertical Transport (A230)	11- 21
A230 5516	Ground Wire Harness	67- 13
A230 5518	AC Harness - Connector	67- 17
A230 8607	Systeminstructions Guide - English (LT)	87- 18
A230 8608	Systeminstructions Guide - English (Asia)	87- 18
A230 8690	Systeminstructions Guide - English (A4)(NRG)	87- 18
A230 8697	Systeminstructions Guide - English (LT)(GES)	87- 18
A230 9003	Adjusting Cam - Laser Unit	89- 2
A230 9004	Positioning Pin Laser Unit	89- 1
A230 9099	NVRAM - Minus Counter	63- 22
A230 9099	NVRAM - Minus Counter	85- 5
A230 9351	Case - Flash Memory Card	89- 4
A230 9352	Flash Memory Card - 4MB	89- 3
A230 9510	OPC Drum	39- 29
A231 8607	Copy Instruction Guide (A4)	87- 19
A231 8608	Copy Instruction Guide (Asia)	87- 19
A231 8690	Copy Instruction Guide (A4)(NRG)	87- 19
A231 8697	Copy Instruction Guide (LT)(GES)	87- 19
A232 1052	Front Grip Plate	67- 2
A232 1053	Rear Grip Plate	67- 6
A232 1054	Joint Stopper	67- 3
A232 1071	Guide Rail - Development Unit	65- 14
A232 1072	Lower Stay - PCU	31- 6
A232 1075	Guide Rail - Fusing Unit	65- 11
A232 1081	Center Frame	65- 3
A232 1082	Left Stay - Paper Exit	65- 1
A232 1083	Bracket - Bridge Unit	65- 2
A232 1086	Suppoert Plate - Scanner Arm	61- 7
A232 1088	Bracket- Fusing Connector	65- 21
A232 1089	Upper Plate - Laser Unit	65- 5
A232 1090	Scanner Unit Plate	9- 10

Part No.	Description	Page and Index No
A232 1092	Spacer - Scanner Unit (Basic Model)	13- 14
A232 1093	Spacer (Duplex Model)	13- 14
A232 1094	Nut	13- 15
A232 1096	Scanner Arm Unit	13- 25
A232 1097	Guide Plate - Scanner Unit	13- 27
A232 1098	Support Plate - Scanner Arm	13- 26
A232 1115	Fusing Relay Gear Ass'y	57- 16
A232 1124	Bracket - Gear	57- 14
A232 1136	Bracket - Belt Stopper	57- 6
A232 1138	Belt Holder	57- 1
A232 1149	Support Bracket - Drum Drive	57- 32
A232 1151	Link Plate - Drum Drive	57- 34
A232 1160	Bracket - Switch Lever	43- 24
A232 1161	Lever - Interlock Switch	43- 27
A232 1170	Left Duct	61- 3
A232 1171	Right Duct	61- 4
A232 1172	Duct - Cooling Fan	61- 2
A232 1173	Sheet - Duct	13- 20
A232 1252	Duct - Upper Cover	13- 7
A232 1257	Cap - Upper Cover	13- 29
A232 1258	Cap - IC Card	13- 5
A232 1261	Front Cover (RIC/INF/LAN)	11- 8
A232 1266	Left Hinge - Front Cover	67- 1
A232 1267	Right Hinge - Front Cover	67- 4
A232 1268	Upper Cover - Paper Feed	11- 6
A232 1272	Right Rear Cover (A231/A232)	11- 26
A232 1282	Cap - Switch	11- 3
A232 1283	Left Cover - Paper Feed Sub-unit	11- 5
A232 1284	Spring Holder	11- 4
A232 1284	Spring holder	75- 7
A232 1284	Spring Holder	31- 4
A232 1284	Spring Holder	37- 31
A232 1284	Spring Holder	13- 22
A232 1286	Stopper - Plate	11- 36
A232 1291	Rear Cover	13- 19

Part No.	Description	Page and Index No.
A232 1297	Upper Cap - Rear Cover	13- 18
A232 1298	Lower Cap - Rear Cover	13- 17
A232 1341	Rear Cover - Scanner Harness	13- 23
A232 1342	Front Cover - Scanner Harness	13- 21
A232 1349	Harness Rear Cover	61- 16
A232 1350	Upper Rear Cover - Scanner	9- 6
A232 1356	Right Cover - Scanner	9- 7
A232 1357	Left Cover - Scanner	9- 3
A232 1358	Lower Cover - Op Panel	9- 14
A232 1359	Seal - Lower Operation Cover	9- 18
A232 1371	Inner Cover - Right Upper	13- 13
A232 1373	Right Inner Cover	43- 10
A232 1375	Left Inner Cover	13- 12
A232 1380	Jam Removal Sheet	11- 10
A232 1381	Decal - Total Counter	87- 3
A232 1381	Decal - Total Counter	13- 10
A232 1383	Decal - Right Scanner Cover	9- 8
A232 1383	Decal - Right Scanner Cover	87- 4
A232 1385	Decal - Indication	87- 5
A232 1502	Key Top - 10 Key (230V)(TWN)	17- 2
A232 1503	Key Top - Start	17- 3
A232 1504	Key Top - Clear	17- 4
A232 1505	Key Top - Inerrupt	17- 6
A232 1507	Key Top - Program	17- 7
A232 1508	Key Top - Switch	17- 8
A232 1510	Key Top - Arrow	17- 9
A232 1515	Cover - Basic	17- 10
A232 1520	Cover - Copy/Fax	17- 11
A232 1522	Key Top - Image Edit	17- 12
A232 1532	Panel Case - Basic	17- 13
A232 1663	Cusion - Scanner Unit Plate	9- 11
A232 1672	Left Scale	9- 1
A232 1675	Bracket - Left Scale	19- 1
A232 1677	Rear Scale	9- 5
A232 1681	Cushion - Lens Block	19- 4

Part No.	Description	Page and Index No
A232 1682	Right Stay - Scanner Unit	19- 12
A232 1683	Spacer - Inner Cover	19- 5
A232 1710	Idler Pulley	21- 33
A232 1712	Front Tension Plate - Scanner Wire	21- 38
A232 1713	Lens Block Supporter	21- 35
A232 1722	Rear Tension Plate - Scanner Wire	21- 24
A232 1726	Spring Plate - Scanner Base	19- 21
A232 1728	Rail Supporter	21- 16
A232 1731	Scanner Rail	21- 27
A232 1732	Rail Bracket	21- 34
A232 1735	Front Scanner Frame	21- 39
A232 1736	Rear Scanner Frame	21- 17
A232 1737	Rear Scanner Base	21- 21
A232 1738	Hinge Bracket	19- 7
A232 1739	Shiled Plate - Sib	21- 40
A232 1751	Scanner Motor - DC 7W	19- 20
A232 1771	Scaner Drive Shaft	21- 28
A232 1782	1st Scanner Ass'y	21- 10
A232 1788	Reflector	21- 12
A232 1789	1st Mirror Holder	21- 14
A232 1791	Front Wire Holder	21- 9
A232 1792	Rear Wire Holder	21- 11
A232 1798	2nd Scanner Ass'y	21- 6
A232 1799	2nd Mirror	21- 4
A232 1808	Harness Guide	21- 5
A232 1811	Lens Block Ass'y (A232)	19- 6
A232 1831	Scanner Control Board (A232)	19- 18
A232 1836	Brancket - ADF I/F Harness	19- 9
A232 1839	Bracket - Sensor	21- 20
A232 1846	Spacer - Scanner Unit Plate	9- 13
A232 1891	LD Unit (A232)	23- 26
A232 1900	Housing - Laser Unit	23- 29
A232 1903	Laser Unit Cover	23- 1
A232 1904	Cap - Laser Unit Cover (A230/A231)	23- 4
A232 1917	Heatsink Laser Unit	23- 5

Part No.	Description	Page and Index No.
A232 1918	Heatsink - Polygon Motor	23- 10
A232 1920	Decal - Heatsink	23- 11
A232 1921	Front Holder - F Theta Mirror	23- 20
A232 1922	Rear Holder - F Thera Mirror	23- 21
A232 1923	Front Holder - BTL	23- 17
A232 1924	Rear Holder - BTL	23- 18
A232 1925	Middle Mirror Holder	23- 15
A232 1926	Mirror Holder	23- 14
A232 1927	Cylindrical Lens Holder	23- 13
A232 1928	Holder - Sync. Detector Mirror	23- 23
A232 1936	Holder - Laser Unit Ass'y	61- 8
A232 1936	Holder - Laser Unit Ass'y	65- 22
A232 1937	Positing Pin - Laser Unit Ass'y	65- 23
A232 1970	Shield Plate - LDDR	65- 24
A232 1971	Support Cover - Imaging Unit	23- 30
A232 2280	Tape - Entrance Seal	39- 7
A232 2281	Cover - Cleaning Unit	37- 2
A232 2288	Shaft - Toner Collection Mylar	37- 9
A232 2289	Front Bushing - Collection Mylar	37- 8
A232 2290	Bushing - Collection Mylar	37- 11
A232 2292	Bushing - Toner Collection Coil	37- 6
A232 2293	Handle - PCU	37- 1
A232 2294	Idler Bracket	37- 13
A232 2298	Bracket - Charge Cleaning	39- 10
A232 2300	Roller - Cleaning	39- 12
A232 2301	Cleaning Pad	39- 13
A232 2303	Front Arm - Charge Unit	39- 15
A232 2305	Rear Arm - Charge Unit	39- 23
A232 2308	Rear Terminal - Charge Roller	39- 24
A232 2310	Bracket - Cleaning Blade	39- 20
A232 2315	Front Bushing - Cleaning Bracket	39- 17
A232 2316	Stud - Cleaning Bracket	39- 1
A232 2318	Collar - Cleaning	39- 21
A232 2321	Shutter - Toner Supply	37- 28
A232 2322	Shield - Shutter - Toner Supply	37- 16

Part No.	Description	Page and Index No
A232 2323	Front Cover - PCU	37- 21
A232 2328	Cap - Toner Supply	37- 20
A232 2329	Stopper - PCU	37- 18
A232 2339	Spur	39- 6
A232 2340	Holder - Pick-off Pawl	39- 4
A232 2353	Cleaning Blade Ass'y	39- 22
A232 2354	Front Terminal - Charge Roller	39- 27
A232 2356	Stepped Screw - M6	39- 9
A232 2362	Stay - PCU	65- 8
A232 2365	Guide Rail - PCU	31- 1
A232 2366	Holder - ID Sensor	31- 3
A232 2367	ID Sensor	31- 5
A232 2372	Lock Lever - Transfer Unit	57- 7
A232 2373	Magnet - Quenching Lamp	65- 9
A232 2374	Spur	31- 2
A232 2379	Transfer Unit Clutch	57- 9
A232 2380	Termal Plate - Change Roller	57- 30
A232 2381	Harness - Charge Roller	57- 27
A232 2382	Terminal Plate - Development Bias	57- 28
A232 2383	Harness - Development Bias	57- 26
A232 2403	Receptacle - Charge Roller	37- 17
A232 2406	Lower Frame - OPC	39- 2
A232 2408	Spring Plate	37- 19
A232 2412	Seal - 2x7x14.5	37- 26
A232 2413	Seal - Front Lower	37- 23
A232 2414	Seal - 2x20x45	37- 24
A232 2416	Seal - 1x3x80	37- 25
A232 2417	Seal - 1x7x12.5	37- 22
A232 2418	Seal - Shutter	37- 29
A232 2419	Left Seal - Cleaning Cover	37- 4
A232 2420	Right Seal - Cleaning Cover	37- 3
A232 2421	Bushing - 6x10x3	39- 25
A232 2422	Guide PCU	39- 30
A232 2574	Upper Entrance Guide	31- 9
A232 2578	Stopper - Guide Plate	31- 25

Part No.	Description	Page and Index No.
A232 2583	Lower Entrance Guide	31- 15
A232 2594	Bracket - Registration Sensor	31- 14
A232 2596	Link Lever	31- 12
A232 2692	Cover - Paper Drive	67- 10
A232 2700	Arm - Gear	59- 6
A232 2702	Pulley Bracket	59- 31
A232 2703	Tightener	59- 33
A232 2705	Tightener - Paper Feed	59- 12
A232 2707	Support Bracket	59- 27
A232 2709	Spacer - By-pass Feed	59- 15
A232 2710	Upper Holder Plate	59- 25
A232 2711	Lower Holder Plate	59- 24
A232 2720	Gear Bracket	11- 30
A232 2722	Knob	11- 32
A232 2723	Support Plate - Knob	11- 34
A232 2724	Knob Cover	11- 29
A232 2750	Paper Feed Unit Ass'y	29- 38
A232 2760	Housing - Paper Feed Unit	29- 9
A232 2762	Paper End Peeler	29- 13
A232 2763	Pick-up Arm	29- 2
A232 2764	Rear Grounding Plate	29- 27
A232 2765	Front Grounding Plate	29- 10
A232 2766	Feed Mylar	29- 40
A232 2770	Stay - Paper Separation	29- 18
A232 2774	Pressure Lever	29- 21
A232 2775	Link Lever	29- 22
A232 2776	Release Lever	29- 15
A232 2777	Shaft - Paper Separation	29- 12
A232 2780	Stay - Paper Feed	29- 33
A232 2781	Sensor Bracket	29- 34
A232 2782	Rear Feed Mylar	29- 14
A232 2783	Terque Limiter	27- 3
A232 2783	Torque Limiter	29- 11
A232 2785	Vertical Guide	29- 24
A232 2857	Cover - Vertical Transport (A231/A232)	11- 21

Part No.	Description	Page and Index No
A232 2858	Upper Support Plate	11- 25
A232 2859	Lower Support Plate	11- 18
A232 2860	Entrance Seal	11- 24
A232 2862	Driven Roller	11- 16
A232 2863	Stopper Band	11- 13
A232 2864	Seal - By-pass Feed	11- 17
A232 2866	Cap - 44x26	11- 23
A232 2867	Cap - 68x28	11- 22
A232 2876	Lower Cover - Vertical Transport	11- 11
A232 2882	Bracket - Micro Switch	59- 26
A232 2969	Tray Cushion	33- 18
A232 2972	Bottom Lift Shaft	33- 12
A232 2975	Bottom Lift Plate	33- 10
A232 2976	Grounding Plate - Paper Tray	33- 13
A232 2977	Bottom Plate	33- 1
A232 2978	Left Shoe	33- 17
A232 2979	Front Side Fence	33- 3
A232 2983	Rear Side Fence	33- 14
A232 2986	Screw - M4X8	33- 2
A232 2987	Roller - Paper Tray	33- 11
A232 2988	Handle - Paper Tray	33- 8
A232 2989	Screw Holder	33- 15
A232 2990	Guide Rail - Paper Tray	67- 12
A232 2995	Front Positioning Guide	67- 7
A232 2996	Rear Positioning Guide	67- 8
A232 2997	Right Stopper - Paper Tray	33- 9
A232 2999	Right Spacer	33- 16
A232 3056	Lower Development Case	45- 23
A232 3065	TD Sensor	45- 18
A232 3067	Tape - TD Sensor	45- 17
A232 3068	Front Bias Terminal - Dev.unit	45- 19
A232 3069	Rear Bias Terminal - Dev.unit	45- 20
A232 3081	Flange - Paddle	45- 22
A232 3091	Flange - Side Plate	45- 21
A232 3100	Development Roller Ass'y	45- 9

Part No.	Description	Page and Index No.
A232 3131	Front Shield - Development Sleeve	45- 10
A232 3132	Rear Shield - Development Sleeve	45- 8
A232 3150	Entrance Seal Ass'y	45- 14
A232 3155	Front Cover - Development Unit	45- 2
A232 3160	Lock Lever - Development Unit	65- 15
A232 3170	Development Drive Unit Ass'y	57- 33
A232 3198	Mylar - Regist Guide Plate	31- 34
A232 3210	Guide - Toner Supply Unit	65- 6
A232 3230	Case - Toner Supply Ass'y	35- 6
A232 3251	Chuck Shaft	35- 9
A232 3252	Slider Ass'y	35- 10
A232 3261	Handle - Toner Supply	35- 5
A232 3262	Slide Rail - Toner Supply	35- 3
A232 3263	Spring Plate - Toner Bottle	35- 7
A232 3264	Stopper - Slide Rail	65- 7
A232 3266	Seal - Slide Rail	35- 2
A232 3552	Ball Bearing - 8x22x7	57- 24
A232 3552	Ball Bearing - 8x22x7	59- 29
A232 3553	Ball Bearing - 8x16x5	39- 28
A232 3559	Ball Bearing - 30x42x7	47- 16
A232 3560	Ball Bearing - 8x22x7	47- 21
A232 3566	Ball Bearing - 8x16x5	21- 29
A232 3880	Transfer Belt	41- 23
A232 3882	Frange - Transfer Unit	41- 35
A232 3883	Spring Plate - Transfer Unit	41- 30
A232 3885	Driven Roller - Transfer Unit	41- 29
A232 3887	Rear Terminal - Transfer Belt	41- 31
A232 3889	Bias Roller	41- 28
A232 3891	Bias Terminal	41- 33
A232 3893	Arm - Transfer Belt	41- 25
A232 3894	Drive Roller - Transfer Belt	41- 24
A232 3900	Case - Transfer Unit	41- 1
A232 3903	Tape - Entrance Mylar	41- 17
A232 3904	Entrance Mylar - Transfer Unit	41- 37
A232 3905	Seal - Shield Plate	41- 18

Part No.	Description	Page and Index No
A232 3906	Seal - Rear Transfer Exit	41- 36
A232 3907	Seal - Transfer Exit	41- 19
A232 3908	Seal - Rear Case	41- 15
A232 3909	Seal - Front Case	41- 22
A232 3911	Rear Lever - Transfer Belt	41- 5
A232 3912	Front Lever - Transfer Belt	41- 6
A232 3913	Bin - Release Lever	41- 16
A232 3916	Pressure Lever - Transfer Belt	41- 4
A232 3917	Release Lever - Transfer Belt	41- 14
A232 3921	Spring Anchor	41- 7
A232 3923	Bracket - Cleaning Blade	41- 20
A232 3924	Rear Bushing - Cleaning Holder	41- 13
A232 3925	Front Bushing - Cleaning Holder	41- 2
A232 3926	Transfer Belt Roller	41- 38
A232 3930	Cleaning Blade - Transfer Belt	41- 21
A232 3935	Shaft - Transfer Unit Stopper	41- 3
A232 3940	Right Cover	43- 4
A232 3941	Fulcrum Pin - Right Cover	43- 1
A232 3942	Stopper - Rightcover	43- 2
A232 3945	Front Hook - Right Cover	43- 7
A232 3948	Rear Hook - Right Cover	43- 13
A232 3950	Hook Lever	43- 30
A232 3962	Spring Plate - Band Stopper	43- 23
A232 3963	Band Stopper	43- 22
A232 3977	Shield Cover	43- 6
A232 3985	Link - Cover	31- 30
A232 3991	Decal - Shield Cover	43- 5
A232 3991	Decal - Shield Cover	87- 7
A232 3995	Relay Harness-toner Overflow Sensor	43- 34
A232 3998	Upper Entrance Guide	43- 15
A232 3999	Lower Entrance Guide	43- 14
A232 4051	Frame - Fusing Unit	47- 28
A232 4053	Fusing Loer Shield	47- 27
A232 4055	Stay - Fusing Unit	47- 13
A232 4056	Pressure Lever	47- 25

Part No.	Description	Page and Index No.
A232 4057	Front Collar - Pressure Lever	47- 24
A232 4058	Rear Collar - Pressure Lever	47- 30
A232 4059	Positioning Plate - Pressure Lever	47- 23
A232 4064	C Riung - Hot Roller	47- 15
A232 4071	Spring - Hot Roller Knob	47- 20
A232 4081	Upper Frame - Fusing Unit	47- 10
A232 4092	Bracket - Fusing Connector	47- 32
A232 4094	Harness - Fusing Unit (115V)	47- 33
A232 4095	Terminal Plate - Fusing Unit	47- 31
A232 4100	Thermofuse	47- 8
A232 4105	Terminal Plate - Thermofuse	47- 12
A232 4111	Front Bracket - Fusing Lamp	47- 5
A232 4115	Rear Bracket - Fusing Lamp	47- 9
A232 4123	Upper Fusing Entrance Guide	47- 38
A232 4127	Lower Fusing Entance Guide	47- 39
A232 4131	Fusing Cover	47- 3
A232 4151	Harness - Fusing Unit (230V)	47- 33
A232 4201	Stopper - Fusing Unit	65- 12
A232 4460	Left Frame - Paper Exit	49- 9
A232 4463	Roller Holder	49- 13
A232 4465	Upper Guide Plate - Paper Exit	49- 3
A232 4467	Entrance Junction Gate	49- 12
A232 4468	Lever - Entrance Junction Gate	49- 15
A232 4470	Right Frame - Paper Exit	49- 28
A232 4473	Exit Junction Gate	49- 20
A232 4474	Bracket - Idle Gear	49- 29
A232 4477	Guide - Junction Gate	49- 19
A232 4479	Support Plate - Right Frame	49- 26
A232 4481	Solenoid- Entrance Gate	49- 24
A232 4484	Solenoid - Exit Gate	49- 27
A232 4488	Harness Guide	49- 6
A232 4491	Guide Plate - Fusing Exit	43- 18
A232 4493	Roller Holder	43- 17
A232 4496	Sub Copy Tray	13- 3
A232 4497	End Fence - Copy Tray	13- 1

Part No.	Description	Page and Index No
A232 4498	Copy Tray Guide	13- 2
A232 4499	Copy Tray Mylar	13- 32
A232 4622	Guide Plate - Right Lower	55- 5
A232 4630	Lower Stay - Duplex	55- 7
A232 4634	Inverter Guide	53- 8
A232 4638	Front Side Plate	53- 25
A232 4642	Rear Side Plate	53- 26
A232 4645	Middle Guide Plate	51- 4
A232 4648	Guide Plate - Driven Roller	51- 13
A232 4653	Presuure Plate - Guide Plate	51- 9
A232 4657	Inverter Roller	53- 13
A232 4665	DC Motor - 17W	55- 14
A232 4665	DC Motor - 17W	53- 22
A232 4668	Bracket - Inverter Motor	53- 21
A232 4678	Bracket - Feed Motor	55- 12
A232 4684	Handle - Unit Release	53- 2
A232 4685	Hook - Unit Release	53- 5
A232 4692	Link Solenoid Ass'y	53- 24
A232 4697	Bracket - Micro Switch	55- 18
A232 4700	Duplex Cover	51- 18
A232 4709	Support Tray - Duplex Unit	51- 11
A232 4720	Inner Cover - Duplex Unit	51- 1
A232 4730	Rear Inner Cover	51- 6
A232 4751	Sensor Bracket	55- 16
A232 4757	Bracket - Feed Sensor	55- 8
A232 4763	Bracket - Entrance Sensor	53- 6
A232 4780	Pin - Stopper	65- 20
A232 4790	Link - Duplex Unit	55- 20
A232 4793	Bracket - Link Lever	51- 8
A232 4800	Bracket - Duplex Drive Board	53- 14
A232 4810	Harness Cover - Duplex Unit	51- 7
A232 4851	Decal - Jam Removal	51- 3
A232 4851	Decal - Jam Removal	87- 8
A232 4852	Jam Removal Decal - Duplex	51- 2
A232 4852	Jam Removal Decal - Duplex	87- 9

Part No.	Description	Page and Index No.
A232 4853	Upper Decal - Duplex Unit	51- 12
A232 4853	Upper Decal - Duplex Unit	87- 10
A232 5051	BICU Board (115V)	85- *
A232 5051	BICU Board (115V)	63- 6
A232 5052	BICU Board (230V)	63- 6
A232 5052	BICU Board (230V)	85- *
A232 5053	BICU Board (Asia)	63- 6
A232 5053	BICU Board (Asia)	85- *
A232 5100	PCB N-BICU EXP	85- 1
A232 5125	IOB Board	63- 4
A232 5125	IOB Board	79- *
A232 5130	PFB Board	59- 20
A232 5140	Duplex Drive Board	53- 15
A232 5190	Scanner I/F Board	19- 17
A232 5230	IC - NIPU M66384FP	85- 2
A232 5251	IC - IMAC RF5C289	85- 3
A232 5310	Laser Sync. Detector	23- 25
A232 5350	IC - HG71C103FD	85- 4
A232 5355	IC GATEX	79- 1
A232 5370	MPU CSS ROM	79- 2
A232 5371	MPU CSS	79- 3
A232 5400	DC Main Haraness - Upper	63- 9
A232 5401	DC Main Harness - Lower	63- 2
A232 5402	DC Harness - Front Upper	63- 3
A232 5403	Harness - IOB / PFB	63- 1
A232 5405	Main Harness - Paper Feed	59- 22
A232 5406	Harness - Paper Tray Set	59- 8
A232 5410	Connector - Finisher	61- 17
A232 5420	Harness - Registration Sensor	31- 16
A232 5421	Harness - Toner Overflow Sensor	43- 28
A232 5422	Harness - Exit Sensor	49- 2
A232 5423	Harness - Exit Gate Solenoid	49- 23
A232 5425	Development I/T Board	65- 18
A232 5427	Harness By-pass Feed	27- 28
A232 5428	Harness - Paper Feed Unit	29- 30

Part No.	Description	Page and Index No
A232 5431	Main Harness - Fusing Unit (115V)	63- 11
A232 5432	Harness - Duplex Unit	53- 16
A232 5433	Harness - Duplex Sensor	53- 17
A232 5437	Relay Harness - Charge Contact Sensor	57- 11
A232 5441	Harness - LDDR	61- 15
A232 5441	Harness - LDDR	63- 8
A232 5444	Harness - Laser Unit (A232)	23- 27
A232 5445	Harness - Laser Unit (A230/A231)	23- 27
A232 5482	Scanner Rear Harness	19- 14
A232 5485	Harness - Scanner/ADF	19- 10
A232 5491	SBU Harness	19- 19
A232 5492	Scanner Relay Harness	19- 16
A232 5495	Exposure Lamp Harness	21- 15
A232 5515	Harness - AC Switch	63- 19
A232 5520	Harness - DC Supply	61- 11
A232 5522	Harness - Interlock Switch	59- 36
A232 5523	Harness - Scanner Unit	61- 12
A232 5715	AC Connector Harness (Option)	21- 42
A232 5811	Bracket High Voltage Supply	61- 6
A232 5825	Connector Bracket	63- 10
A232 5831	Bracket - IOB	63- 5
A232 5835	Spring - Scanner Unit Plate	9- 17
A232 5836	Front Grounding Plate	13- 34
A232 5837	Rear Grounding Plate	13- 35
A232 5838	Spring Plate - BICU	63- 23
A232 5839	Sheet - DC Motor	57- 36
A232 5860	Braket - Interlock Switch	63- 13
A232 5861	Lever - Interlock Switch	63- 12
A232 5865	Lever - Push Switch	63- 18
A232 5866	Bracket - Push Switch	63- 15
A232 5867	Angle Bracket Push Switch	63- 16
A232 5874	Bracket - Power Supply Cord	61- 9
A232 6009	By-pass Feed Table Ass'y	25- 24
A232 6022	Housing - By-pass Feed	27- 13
A232 6023	Grounding Plate - Reverse	27- 15

Part No.	Description	Page and Index No.
A232 6028	Guide Plate Paper Separator	27- 10
A232 6033	Shaft Driven Roller	27- 4
A232 6035	Shaft - Drive Roller	27- 9
A232 6038	Gear Cover	27- 11
A232 6043	Arm Paper Pick Up	27- 20
A232 6044	Support Plate	27- 24
A232 6046	Grounding Plate - Feed	27- 25
A232 6049	Solenoid Bracket	27- 37
A232 6051	Pickup Solenoid	27- 27
A232 6055	Paper End Feeler	27- 16
A232 6057	Bracket-by-pass Feed Drive	27- 41
A232 6059	Arm Tightener	27- 33
A232 6061	Tightener Bracket	27- 38
A232 6065	Rail - By-pass Feed	27- 39
A232 6067	By - Pass Feed Table	25- 10
A232 6068	Cover By-pass Table	25- 11
A232 6069	Front Side Fence	25- 21
A232 6070	Rear Side Fence	25- 19
A232 6071	Sub - Front Fence	25- 22
A232 6072	Sub - Rear Fence	25- 20
A232 6073	Decal - By-pass Feed	25- 16
A232 6073	Decal - By-pass Feed	87- 11
A232 6080	Paper Size Detector	25- 15
A232 6082	Front Rack	25- 12
A232 6083	Rear Rack	25- 14
A232 6085	Guide By - Pass Table	25- 17
A232 6090	Bracket Positioning Pin	25- 6
A232 6091	Positioning Pin	25- 7
A232 6092	Roller - Holder	25- 18
A232 6095	Frame By-pass Unit Holder	25- 2
A232 6106	Middle Lower Cover	25- 1
A232 6107	Middle Upper Cover	25- 5
A232 6108	Rear Cover - By-pass Unit	25- 4
A232 6109	Front Cover - By-pass Unit	25- 3
A232 7021	Front Cover (GES/SVN)	11- 8

Part No.	Description	Page and Index No
A232 7071	Model Name Plate (GES)	11- 37
A232 7072	Model Name Plate (SVN)	11- 37
A232 7210	Drum Holder	57- 25
A232 7219	Lower Rear Cover	13- 16
A232 7222	Left Cover (LT)	11- 1
A232 7232	Operation Panel Ass'y (LT)	9- 15
A232 7232	Operation Panel Ass'y (LT)	17- *
A232 7233	Operation Panel Case (LT)(Asia)	17- 15
A232 7234	Sheet - Switch (LT)(Asia)	17- 16
A232 7235	Sheet - LCD (LT)(Asia)	17- 17
A232 7236	Sheet - Option (LT)(Asia)	17- 18
A232 7237	Sheet - Image Edit (LT)(Asia)	17- 1
A232 7238	Key Top - Clear Modes	17- 14
A232 7239	Key Top - 10 Key (115V)	17- 2
A232 7252	Cover - Lens Block	19- 3
A232 7260	Development Unit	45- 1
A232 7263	Cover - Toner Supply Unit (RIC NA)	35- 1
A232 7320	Fusing Unit Ass'y (115V)	47- 1
A232 7355	Scanner Front Harness	19- 15
A232 7365	Upper Frame - PCU	37- 30
A232 7380	Option Decal - Sub-unit LT	87- 6
A232 7463	Cover - Toner Supply Unit (OEM)	35- 1
A232 7571	Model Name Plate (NST)	11- 37
A232 7572	Model Name Plate (REX)	11- 37
A232 7622	Left Cover (A4)	11- 1
A232 7624	Upper Cover	13- 4
A232 7632	Operation Panel Ass'y (A4)(TWN)	9- 15
A232 7632	Operation Panel Ass'y (A4)(TWN)	17- *
A232 7633	Operation Panel Case (A4)(TWN)	17- 15
A232 7634	Sheet - Switch (A4)(TWN)	17- 16
A232 7635	Sheet - LCD (A4)(TWN)	17- 17
A232 7636	Sheet - Option (A4)(TWN)	17- 18
A232 7637	Sheet - Image Edit (A4)(TWN)	17- 1
A232 7639	Operatin Panel Board	17- 20
A232 7663	Cover - Toner Supply Unit (RIC EU)	35- 1

Part No.	Description	Page and Index No.
A232 7720	Fusing Unit Ass'y (230V)	47- 1
A232 7755	Main Harness - Fusing Unit (230V)	63- 11
A232 7756	Harness - Circuit Breaker (230V)	61- 19
A232 7757	Bracket - Circuit Breaker (230V)	61- 18
A232 7758	Harness - Heater	61- 10
A232 7780	Option Decal - Sub-unit A4	87- 6
A232 7831	Support Cover (INF)	11- 9
A232 7932	Operation Panel Ass'y (Asia)	17- *
A232 7932	Operation Panel Ass'y (Asia)	9- 15
A232 7933	Key Top - 10 Key (Asia)	17- 2
A232 8607	Quick Guide - LT English	87- 20
A232 8608	Quick Guide - EU English (Asia)	87- 20
A232 8690	Quick Guide - EU English (NRG)	87- 20

Part No.	Description	Page and Index No
AA00 0204	Decal - Right Lower Cover	87- 13
AA00 0204	Decal - Right Lower Cover	11- 28
AA00 1392	Decal - A1	87- 14
AA00 1392	Decal - A1	11- 19
AA00 1393	Decal - A2	87- 15
AA00 1393	Decal - A2	31- 32
AA00 2209	Decal - Paper Size	87- 16
AA00 3002	Decal - Add Paper	87- 12
AA00 3002	Decal - Add Paper	33- 7
AA01 2102	Development Filter	45- 15
AA02 1030	Magnet Catch	51- 19
AA04 3416	Timing Belt - 40S3M192	11- 31
AA04 3439	Timing Belt - S2M-224	21- 32
AA04 3441	Timing Belt - S2M	57- 22
AA04 3442	Timing Belt - S3M-264	57- 3
AA04 3443	Timing Belt - S2M 140	55- 10
AA04 3443	Timing Belt - S2M 140	53- 20
AA04 3444	Timing Belt - S2M 350	55- 1
AA04 3445	Timing Belt - S3M-360	59- 4
AA04 3446	Timing Belt - S3M-312	59- 11
AA04 3447	Timing Belt - S2M 210	49- 25
AA05 0103	Scanner Drive Wire	21- 25
AA05 1027	Wire - Fusing Drive	43- 25
AA06 0687	Pressure Spring	47- 26
AA06 0689	Tension Spring	43- 26
AA06 0690	Spring	57- 15
AA06 0691	Tension Spring	29- 4
AA06 0692	Tension Spring	29- 23
AA06 0693	Tension Spring	29- 37
AA06 0694	Tension Spring	59- 13
AA06 0695	Tension Spring	59- 34
AA06 0696	Tension Spring	57- 8
AA06 0697	Tension Spring	49- 16
AA06 0701	Tension Spring	47- 7
AA06 0702	Tension Spring	19- 11

Part No.	Description	Page and Index No.
AA06 0703	Tension Spring	21- 26
AA06 0708	Pressure Spring	53- 11
AA06 0709	Tension Spring	51- 15
AA06 0711	Pressure Spring	41- 10
AA06 0712	Torsion Spring	41- 27
AA06 0713	Tension Spring	63- 21
AA06 0714	Spring	65- 17
AA06 0716	Tension Spring	49- 17
AA06 2299	Pressure Spring	39- 18
AA06 2300	Tension Spring	39- 19
AA06 2301	Tension Spring	39- 11
AA06 2302	Pressure Spring	39- 5
AA06 2303	Tension Spring	37- 27
AA06 2304	Pressure Spring	31- 23
AA06 2305	Tension Spring	31- 10
AA06 3303	Pressure Spring	51- 16
AA06 3304	Terminal Spring	31- 19
AA06 3305	Torsion Spring	41- 8
AA06 3306	Tension Spring	43- 19
AA06 3371	Spring	57- 29
AA06 3499	Pressure Spring	27- 5
AA06 3561	Pressure Spring	39- 16
AA06 3563	Spring	11- 35
AA06 3564	Tension Spring	11- 14
AA06 3566	Pressure Spring	35- 8
AA06 3567	Tensior Spring	27- 29
AA06 3568	Pressure Spring	27- 26
AA06 3569	Spring	27- 36
AA06 3570	Tension Spring	47- 37
AA06 6152	Tension Spring	53- 4
AA06 6292	Tension Spring	59- 7
AA06 6293	Torsion Spring	55- 17
AA06 6574	Torsion Spring	25- 9
AA06 6575	Torsion Spring	43- 8
AA06 6576	Torsion Spring	43- 12

Part No.	Description	Page and Index No
AA06 6577	Torsion Spring	31- 29
AA08 0034	Bushing - 4x5x7	51- 10
AA08 0227	Bushing - M4	53- 10
AA08 0228	Bushing - M4	11- 15
AA08 0229	Front Busing - M6	31- 26
AA08 0230	Rear Busing - M6	31- 22
AA08 0231	Bushing - Bias Roller	41- 26
AA08 0232	Bushing - M4	43- 20
AA08 0234	Bushing - 12x18x6	45- 30
AA08 2054	Bushing - M4	41- 32
AA08 2070	Bushing - 8x16x7	29- 8
AA08 2070	Bushing - 8x16x7	25- 8
AA08 2072	Bushing - M6	29- 26
AA08 2073	Roller Busing	47- 36
AA08 2074	Bushing - M8	53- 1
AA08 2075	Bushing - M6	55- 3
AA08 2079	Bushing - 6x8x5.8	43- 3
AA08 2080	Bushing - M8	31- 20
AA08 3010	Clutch Roller - 6x14x10	27- 30
AA08 3014	One-way Clutch	29- 29
AA10 0006	Nut - M3.6	9- 16
AA12 0089	Antistatic Brush	49- 8
AA13 2174	Spacer - M8	21- 2
AA14 0140	Screw - M3X4.5	47- 34
AA14 0655	Shaft - Paper Feed	29- 28
AA14 0656	Shaft - Gear	29- 20
AA14 0660	Feed Shaft	27- 21
AA14 0666	Shaft - Hook	43- 9
AA14 3285	Stepped Screw	65- 16
AA14 3301	Stepped Screw - M3X4	63- 20
AA14 3307	Stepped Screw - M3	45- 7
AA14 3432	Stepped Screw - M3	65- 19
AA14 3461	Stepped Screw - M2.5	55- 19
AA14 3485	Pin - 5mm	13- 31
AA14 3499	Stepped Screw	69- 5

Part No.	Description	Page and Index No.
AA14 3500	Stepped Screw - M6	9- 12
AA14 3501	Stepped Screw - M8	13- 24
AA14 3502	Bin Joint Guide	67- 9
AA14 3512	Stepped Screw - M2.5	63- 14
AA14 5260	Gear Shaft	59- 30
AA14 5810	Slide Shaft	35- 4
AA14 8447	Guide Pin - Platen Cover	15- 11
AA14 9291	Pin - Link	31- 11
AA15 0401	Seal - 70x20	41- 9
AA15 0667	Seal - 50.5x60	21- 7
AA15 0668	Sheet - 100x21	21- 22
AA15 0669	Sheet - 250x21	21- 23
AA15 0684	Shield Plate	65- 4
AA15 0685	Seal - 215x10	13- 30
AA15 2283	Ring - M12	45- 25
AA15 2403	Sponge - Laser Unit Cover	23- 7
AA15 2405	Decal - Heatsink (A232)	23- 4
AA15 3052	Entrance Seal - Toner Supply	45- 6
AA15 3053	Sponge - 317x5x5	45- 28
AA15 3054	Sponge - 17x7x5	45- 27
AA15 3059	Sponge - 8x8x1	45- 29
AA15 3062	Sponge - M46	45- 26
AA15 3070	Dehumidifier Sheet	13- 28
AA15 3390	Sponge - 202x3.5x4	13- 8
AA15 3391	Frame Seal - Rear Vertical	43- 33
AA15 3392	Sponge - 24x6x5	43- 11
AA15 3393	Frame Seal - Rear Vertical	43- 29
AA16 1125	Grometto	69- 4
AA16 1127	Cushion - 16x6x4	49- 4
AA16 1128	Cushion - 12x8x2	49- 18
AA16 1133	Cushion - 4x15x1	21- 18
AA16 2046	Cushion - 347x10x5	53- 7
AA16 2067	Platen Cover Pad	15- 2
AB01 0106	Gear - 24Z	29- 19
AB01 0107	Gear - 23Z	29- 17

Part No.	Description	Page and Index No
AB01 1088	Gear - 30Z	55- 13
AB01 1188	Gear - 21Z	29- 3
AB01 1189	Gear - 18Z	29- 7
AB01 1190	Gear - 25Z	41- 34
AB01 1377	Gear - 14Z	37- 7
AB01 1378	Gear - 19Z	37- 12
AB01 1379	Gear - 19Z	37- 15
AB01 1380	Cam - Cleaning Blade	37- 14
AB01 1383	Jooint Gear - 45z	45- 16
AB01 1384	Gear - 29Z	45- 11
AB01 1386	Development Sleeve Gear	45- 12
AB01 1387	Gear - 23Z	27- 23
AB01 1388	Gear - Z16	27- 8
AB01 1389	Gear - 20Z	27- 7
AB01 1390	Gear - 27Z	27- 34
AB01 3485	Gear - 20Z	31- 33
AB01 3882	Gear - 40Z	47- 18
AB01 4036	Gear - 27Z	59- 5
AB01 4037	Gear - 24Z	59- 2
AB01 4038	Gear - 22Z	59- 9
AB01 4039	Gear - 31Z	59- 21
AB01 4040	Gear - 29Z	59- 23
AB01 4041	Gear - 37Z	57- 17
AB01 4042	Gear - 37Z	57- 18
AB01 4043	Gear - 39Z	57- 13
AB01 4045	Gear - 33Z	57- 12
AB01 4046	Gear - 25Z	47- 29
AB01 4047	Gear - 29Z	31- 24
AB01 4048	Gear - 30Z	57- 2
AB01 4049	Gear - 24Z	49- 10
AB01 4051	Gear - 16Z	31- 27
AB01 4053	Gear - 30Z	53- 23
AB01 4060	Gear - 21Z	45- 4
AB01 4061	Gear - 13Z	45- 3
AB01 4062	Gear - 17Z/25Z	45- 5

Part No.	Description	Page and Index No.
AB01 4090	Gear - 18Z	29- 39
AB01 7429	Gear - 27Z	41- 12
AB01 7454	Gear - 24Z/30Z	27- 32
AB01 7455	Gear - 21Z/35Z	53- 18
AB01 7456	Gear - 20Z	53- 19
AB01 7457	Gear Pulley - 20Z/40T	55- 11
AB01 7458	Gear Pulley - 18Z/22T	49- 30
AB01 7460	Gear - Pully - 30Z/24T	57- 4
AB01 7461	Gear Pulley - 30Z/20T	57- 5
AB03 0474	Pulley - 24T	55- 2
AB03 0561	Timing Pulley - 31Z/20T	59- 17
AB03 0562	Timing Pulley - 31Z/20T	59- 14
AB03 0564	Pulley - M17	59- 16
AB03 0564	Pulley - M17	11- 33
AB03 0565	Timing Pulley - 20T	59- 3
AB03 0566	Timing Pulley - 20T	59- 32
AB03 0567	Timiing Pulley - 18t	59- 35
AB03 0568	Pulley - 23T	49- 22
AB03 0572	Timing Pulley - Z61	21- 31
AB03 0574	Timing Pulley - 79T	57- 21
AB03 0584	Timing Pulley - 15T	11- 27
AB03 0590	Pulley - M17	59- 28
AB03 2060	Pulley - M22	21- 1
AB03 2061	Front Scanner Pulley	21- 37
AB03 2062	Rear Scanner Pulley	21- 30
AC00 1060	Platen Cover Ass'y	15- 9
AC01 2064	Exposure Glass	9- 4
AC01 5024	Shield Glass - Polygon Motor	23- 28
AC01 5025	Shield Glass	23- 8
AC03 0110	Scanner Mirror	21- 13
AC03 0115	Mirror	23- 16
AD01 5020	Drum Shaft	57- 31
AD02 1127	Receptacle	31- 18
AD02 5021	Pick-off Pawl	39- 3
AD02 7006	Charge Roller	39- 26

Part No.	Description	Page and Index No
AD03 8078	Paddle	45- 24
AD04 3050	Toner Collection Coil	37- 5
AD04 4000	Toner Collection Mylar	37- 10
AD04 7023	Cleaning Entrance Seal	39- 8
AE01 1041	Hot Roller	47- 17
AE02 0074	Pressure Roller - M30	47- 22
AE04 2029	Fusing Cleaningroller	47- 35
AE04 4022	Hot Roller Stripper	47- 6
AE04 4024	Pressure Roller Stripper	47- 4
AF00 2005	Paper Tray	33- 4
AF01 3014	Bottom Plate Pad	33- 5
AF01 3016	Bottom Plate Pad	27- 6
AF01 7020	End Fence	33- 6
AF02 0404	Transport Roller	29- 32
AF02 0406	Transport Roller	49- 5
AF02 0407	Transport Roller	49- 21
AF02 0408	Driven Roller - M16	43- 21
AF02 0410	Registration Roller	31- 7
AF02 0411	Driven Roller	53- 9
AF02 0412	Driven Roller	51- 17
AF02 0413	Driven Roller	53- 12
AF02 0414	Transport Roller	55- 4
AF02 0415	Transport Roller	55- 6
AF02 1059	Driven Registration Roller	31- 8
AF02 5036	Duplex Junction Gate	51- 14
AF03 0035	Pick-up Roller	29- 1
AF03 0036	Pick Up Roller	27- 22
AF03 1035	Feed Roller	29- 6
AF03 1036	Feed Roller	27- 40
AF03 2035	Separation Roller	29- 36
AF03 2036	Separation Roller	27- 2
AF04 0031	Driven Roller	27- 18
AF04 0557	Roller - M16	49- 7
AF04 0559	Driven Roller - M9	43- 16
AF04 0559	Driven Roller - M9	25- 23

Part No.	Description	Page and Index No.
AF04 0560	Driven Roller	49- 14
AG05 0085	Registration Roller Knob	31- 28
AG05 0086	Knob - Hot Roller	47- 19
AG05 1137	Handle Lever	43- 32
AG07 0014	Magnet Catch	11- 20
AG07 1010	Magnet Catch	13- 9
AH01 0009	Rubber Pad - H5	67- 11
AH01 0009	Rubber Pad - H5	21- 36
AW01 0048	Photo Sensor - GP2A28N1	53- 3
AW01 0048	Photo Sensor - Gp2a28n1	31- 17
AW01 0052	Original Sensor - H=2-62	19- 2
AW01 0053	Original Sensor - H=62	19- 22
AW02 0056	Photointerruptor - EE-SX4235A-P1	27- 19
AW02 0056	Photointerruptor - EE-SX4235A-P1	29- 31
AW02 0056	Photointerruptor - EE-SX4235A-P1	55- 15
AW02 0056	Photointerruptor - EE-SX4235A-P1	21- 19
AW02 0096	Photointerruptor	29- 35
AW02 0097	Photointerruptor	57- 10
AW02 0098	Photosensor	49- 1
AW02 0100	Photointerruptor - P1CH2MM	19- 8
AW02 0102	Photointerruptor	55- 9
AW10 0042	Thermistor	47- 11
AW31 0006	Toner Overflow Sensor	41- 11
AW50 0022	Push Switch	59- 10
AW50 0022	Push Switch	63- 17
AX04 0078	DC Motor - 3W	59- 18
AX05 0117	DC Motor - 2.4W	57- 23
AX06 0141	Polygon Mirror Motor (A230/A231)	23- 9
AX06 0143	Polygon Mirror Motor (A232)	23- 9
AX06 0145	DC Motor - 48W (A232)	57- 35
AX06 0146	DC Motor - 38W (A230/A231)	57- 35
AX20 0138	Electrical Clutch	31- 21
AX20 0138	Electrical Clutch	59- 19
AX20 0140	Electrical Cluthc	27- 31
AX20 0153	Electrical Clutch	59- 1

Part No.	Description	Page and Index No
AX40 0109	Heater - 120V 9W	67- 14
AX40 0110	Heater - 230V 9W	67- 14
AX40 0117	Heater - 120V 15W	21- 41
AX40 0118	Heater - 240V 15W	21- 41
AX44 0107	Fusing Lamp - 120v 860w	47- 14
AX44 0108	Fusing Lamp - 230v 430w	47- 14
AX50 0046	Quenching Lamp	65- 10
AX50 0061	Exposure Lamp	21- 8
AX64 0080	Fan Motor - DC 2.88W	61- 1
AZ00 0041	Power Supply Cord - 115V	61- 13
AZ00 0042	Power Supply Cord - 230V	61- 13
AZ23 0076	Power Supply Unit - 230V	61- 14
AZ23 0077	Power Supply Unit-115V	61- 14
AZ32 0086	High Voltage Supply - CBT	61- 5
AZ50 0052	Lamp Stabilizer	19- 13
C225 2866	Decal - Key top Cover (REX)	9- 19
C225 2867	Decal - Cover - Panel - Nashua	9- 19
G010 3039	Knob - Entrance Guide	31- 31
G011 3305	Gear - 16T	25- 13
G020 1053	Guard Bracket	67- 5
G020 1184	Flange - Fly Wheel	57- 20
G020 1189	Fly Wheel (A230/A231)	57- 19
G020 1189	Fly Wheel (A232)	57- 19
G020 1332	Hinge - Front Cover	11- 7
G020 1917	Decal - LD (230V)	87- 17
G020 1917	Decal - LD	23- 3
G020 1918	Decal - Laser Diode (A4)	23- 2
G020 1920	Decal - Laser Diode (115V)	87- 17
G020 1920	Decal - Laser Diode (LT)	23- 2
G020 1966	Cylindrical Lens	23- 12
G020 1968	F Theta Mirror	23- 22
G020 1969	BTL Lens	23- 19
G022 5906	Simm Memory 8MB (Option - A230)	63- 7
G404 2810	Spring Plate - Mirror - Second	21- 3
GA08 0002	Bushing - 6mm	27- 35

Part No.	Description	Page and Index No.
GC03 0020	Sync. Detector Mirror	23- 24
N601 4576	Coil - SK12M4	61- 20
N607 6527	Fan Motor - DC 0.96W	61- 21

Part No.	Description	Page and Index No
A006 9104	Adjusting Scanner Pin (4pcs/set)	89- 5
A028 9300	Grease Barrierta JFE 55/2	89- 8
A029 9387	Digital Multimeter - FLUKE87	89- 7
A053 1957	Flex Hinge - Platen Cover	15- 4
A096 6554	Side Fence Pad	33- 19
A134 1383	Emblem (RIC/LAN)	11- 9
A134 1394	Front Platen Cover	15- 3
A134 1395	Rear Platen Cover	15- 5
A134 1396	Original Holder	15- 6
A134 2661	Feeler Roller	27- 17
A134 2843	Spacer - 6x30x1.5	27- 12
A134 3180	Bottle Chuck	35- 11
A153 1370	Platen Cover Hinge	15- 8
A153 1380	Platen Cover Bracket	15- 10
A153 1383	Platen Cover Feeler	15- 7
A153 6409	Decal - Key top Cover (NRG)	9- 19
A176 1317	Cap - 34x55	13- 6
A176 1365	Cap - 38x77	11- 2
A190 4476	Decal - High Temperature	65- 13
A190 4476	Decal - High Temperature	87- 1
A193 7425	Decal - High Temperature	87- 2
A193 7425	Decal - High Temperature	23- 6
A217 1340	Knob Screw - M4x10	9- 9
A233 1812	Lens Block Ass'y (A230/A231)	19- 6
A233 1843	Scanner Control Board (A230/A231)	19- 18
A233 5155	Extention Board	75- 6
A233 5860	Front Stay	75- 2
A233 5865	Rear Cover	75- 1
A233 5868	Grounding Plate	75- 8
A233 5871	Extention Rack	75- 5
A233 5890	Panel Rack Ass'y	75- 4
A233 5892	Fax Control Cover	75- 3
A233 7345	Decal - TEL/Line	13- 11
A509 1055	Key Counter Bracket Ass'y	73- 3
A509 1063	Plate Nut	73- 5

Part No.	Description	Page and Index No.
A598 1260	Key Counter Cover	73- 4
A666 2421	SUB - Shift Tray	71- 5
A674 5401	Key Counter Harness	73- 1
A674 5810	Duplex Tape	73- 2
A680 4321	Exit Tray	71- 4
A680 4331	Exit Tray Holder	71- 1
A680 4332	Original Guide	71- 3
A680 4351	Screw - M4x17mm	71- 2
A691 5100	MSU Board	69- 8
A691 5871	1.6G Byte HDD	69- 1
A691 5872	HDD Lower Cover	69- 2
A691 5875	HDD Upper Cover	69- 10
A691 5881	DC Power Harness	69- 6
A691 5883	Interface Harness	69- 7
A691 5892	HDD Bracket	69- 3
A691 5895	MSU Board Bracket	69- 9
A693 1292	CSS Rear Cover	13- 33
A693 1292	Rear Cover - CSS	13- 19

Part No.	Description	Page and Index No
5203 9501	Grease 501	89- 9
5206 2684	Shoulder Screw - M3	17- 19
5206 2684	Shoulder Screw - M3	47- 2
5206 2684	Shoulder Screw - M3	9- 2
5206 2686	Snap Ring	29- 16
5206 2686	Snap Ring	45- 13
5206 2686	Snap Ring	11- 12
5206 2686	Snap Ring	31- 13
5216 4198	Stepped Screw - Guide Plate	27- 14
5420 9516	Test Chart - OS - A3 (10pcs/set)	89- 6
5447 2681	Snap Ring	27- 1
5447 2681	Snap Ring	29- 5
5447 2681	Snap Ring	39- 14
5447 2681	Snap Ring	43- 31
5447 2681	Snap Ring	49- 11
5447 2681	Snap Ring	51- 5
5448 2804	Platen Cover Sheet	15- 1

Part No.	Description	Page and Index No.
0313 0040B	Philips Pan Head Screw - M3x4	53-109
0313 0060B	Philips Pan Head Screw - M3x6	31-108
0313 0060B	Philips Pan Head Screw - M3x6	53-103
0314 0060B	Philips Pan Head Screw - M4x6	21-111
0314 0120B	Philips Pan Head Screw - M4x12	19-102
0353 0040B	Screw - M3X4	27-105
0353 0060B	Philips Pan Head Screw - M3x6	33-102
0353 0060B	Philips Pan Head Screw - M3x6	31-102
0353 0060B	Philips Pan Head Screw - M3x6	19-103
0354 0080B	Screw - M4X8	13-102
0414 0142B	Binding Self Tapping Screw - M4x4	15-101
0450 3006B	Tapping Screw - M3x6	39-103
0450 3006B	Tapping Screw - M3x6	13-105
0450 3008B	Tapping Screw - M3x8	21-105
0450 3008B	Tapping Screw - M3x8	39-101
0450 3008B	Tapping Screw - M3x8	23-103
0450 3008B	Tapping Screw - M3x8	49-102
0450 3008B	Tapping Screw - M3x8	45-105
0450 3008B	Tapping Screw - M3x8	27-106
0450 3008B	Tapping Screw - M3x8	43-102
0450 3008B	Tapping Screw - M3x8	41-103
0450 3008B	Tapping Screw - M3x8	31-106
0450 3008B	Tapping Screw - M3x8	35-102
0450 3008B	Tapping Screw - M3x8	37-101
0450 3008B	Tapping Screw - M3x8	11-105
0450 3010B	Tapping Screw - M3x10	45-101
0450 3010B	Tapping Screw - M3x10	23-104
0450 3010B	Tapping Screw - M3x10	45-106
0450 3012B	Tapping Screw -3X12	11-106
0450 4008B	Tapping Screw - 4x8	39-104
0450 4035B	Philips Tapping Screw - M4x35	61-109
0451 3006B	Tapping Screw - M3x6	51-102
0451 3006B	Tapping Screw - M3x6	41-101
0451 3006B	Tapping Screw - M3x6	11-102
0451 3006B	Tapping Screw - M3x6	43-101

Part No.	Description	Page and Index No
0451 3006B	Tapping Screw - M3x6	39-107
0451 3006B	Tapping Screw - M3x6	31-101
0451 3006B	Tapping Screw - M3x6	9-103
0451 3006B	Tapping Screw - M3x6	53-104
0451 3006B	Tapping Screw - M3x6	59-106
0451 3006B	Tapping Screw - M3x6	75-101
0451 3006B	Tapping Screw - M3x6	19-101
0451 3006B	Tapping Screw - M3x6	61-102
0451 3006B	Tapping Screw - M3x6	69-101
0451 3006B	Tapping Screw - M3x6	47-101
0451 3006B	Tapping Screw - M3x6	55-102
0451 3006B	Tapping Screw - M3x6	49-101
0451 3006B	Tapping Screw - M3x6	67-101
0451 3006B	Tapping Screw - M3x6	57-101
0451 3006B	Tapping Screw - M3x6	65-101
0451 3006B	Tapping Screw - M3x6	21-101
0451 3006B	Tapping Screw - M3x6	63-104
0451 3008B	Tapping Screw - M3x8	27-101
0451 3008B	Tapping Screw - M3x8	39-102
0451 3008B	Tapping Screw - M3x8	65-102
0451 3008B	Tapping Screw - M3x8	57-102
0451 3008B	Tapping Screw - M3x8	19-105
0451 3008B	Tapping Screw - M3x8	61-105
0451 3008B	Tapping Screw - M3x8	59-108
0451 3008B	Tapping Screw - M3x8	47-102
0451 3008B	Tapping Screw - M3x8	29-101
0451 3008B	Tapping Screw - M3x8	25-104
0451 3008H	Tapping Screw - M3x8	9-101
0451 3008H	Tapping Screw - M3x8	25-101
0451 3008H	Tapping Screw - M3x8	43-103
0451 3008H	Tapping Screw - M3x8	11-101
0451 3008H	Tapping Screw - M3x8	51-101
0451 3008H	Tapping Screw - M3x8	13-101
0451 3010B	Tapping Screw - M3x10	23-102
0451 3010H	Tapping Screw - 3x10	13-103

Part No.	Description	Page and Index No.
0451 3014B	Tapping Screw - M3x14	59-104
0451 3014B	Tapping Screw - M3x14	57-107
0451 3014H	Tapping Screw - 3x14	13-104
0451 4006B	Tapping Scrw - 4X6	67-110
0451 4010B	Tapping Screw - 4x10	25-105
0452 3010B	Tapping Bind Screw - M3x10	35-101
0452 3010B	Tapping Bind Screw - M3x10	33-103
0452 4008B	Tapping Screw - 3x8	73-101
0453 3012B	Binding Self Tapping Screw - 3x12	47-104
0534 0050E	Headless Screw - M4 X 5	57-106
0575 0050E	Hexagon Headless Set Screw - M5x5	21-108
0720 0015E	Retaining Ring - 1.5	39-106
0720 0020E	Retaining Ring - M2	31-109
0720 0030E	Retaining Ring - M3	45-102
0720 0030E	Retaining Ring - M3	53-105
0720 0030E	Retaining Ring - M3	47-105
0720 0030E	Retaining Ring - M3	11-104
0720 0040E	Retaining Ring - M4	49-103
0720 0040E	Retaining Ring - M4	55-106
0720 0040E	Retaining Ring - M4	53-107
0720 0040E	Retaining Ring - M4	37-102
0720 0040E	Retaining Ring - M4	27-103
0720 0040E	Retaining Ring - M4	45-104
0720 0040E	Retaining Ring - M4	39-105
0720 0040E	Retaining Ring - M4	29-102
0720 0040E	Retaining Ring - M4	31-104
0720 0060E	Retaining Ring - M6	21-102
0720 0060E	Retaining Ring - M6	33-101
0720 0060E	Retaining Ring - M6	11-103
0720 0060E	Retaining Ring - M6	53-101
0720 0060E	Retaining Ring - M6	59-102
0720 0060E	Retaining Ring - M6	31-103
0720 0060E	Retaining Ring - M6	25-103
0720 0060E	Retaining Ring - M6	29-103
0720 0060E	Retaining Ring - M6	43-104

Part No.	Description	Page and Index No
0720 0080E	Retaining Ring - M8	47-106
0725 0110E	C Ring - M11	45-103
0801 0149	Philips Pan Head Screw - M4x6	67-109
0801 0149	Philips Pan Head Screw - M4x6	59-109
0801 0149	Philips Pan Head Screw - M4x6	61-107
0801 0149	Philips Pan Head Screw - M4X6	69-102
0801 0153	UNC Bind Screw - 6-32	69-103
0802 5265	Tapping Screw - M3x6	9-102
0802 5265	Tapping Screw - M3x6	53-102
0802 5265	Tapping Screw - M3x6	55-105
0805 0089	Retaining Ring - M4	29-105
0805 3480	Bushing - 6mm	55-101
0805 3480	Bushing - 6mm	27-102
0805 3480	Bushing - 6mm	29-104
0805 3480	Bushing - 6mm	49-104
0805 3480	Bushing - 6mm	59-101
0950 4006M	Philips Screw With Flat Washer - M4x6	63-105
0950 4006M	Philips Screw With Flat Washer - M4x6	47-103
0951 3005B	Philips Screw With Flat Washer - M3x5	49-106
0951 3006B	Philips Screw With Flat Washer - M3x6	21-103
0951 3006B	Philips Screw With Flat Washer - M3x6	41-102
0951 3008B	Philips Screw With Flat Washer - M3x8	23-101
0957 3006Z	Screw - M3x6	21-112
0957 3012B	Double Sems Screw - M3 X 12	47-107
1005 0728	Rivet - NRP335	21-104
1101 0328	Connector Pin Contact	85-101
1101 0328	Connector Pin ContactT	79-101
1102 2452	Terminal Block - 3P	79-102
1102 3822	Connector - 20P	79-103
1102 4872	CT Header - 6P	79-104
1102 5304	Connector - 5P	85-102
1102 5306	Connector - 7P	79-105
1102 6245	Relay Connector - 2P	49-105
1102 6245	Relay Connector - 2P	63-112
1102 6246	Relay Connector - 4P	31-107

Part No.	Description	Page and Index No.
1102 6246	Relay Connector - 4P	63-109
1102 6247	Connector - 4P	63-111
1102 6249	Reray Connector - 6p	63-108
1102 6256	Relay Connector - 13P	63-115
1102 6260	Relay Connector - 3P	63-110
1102 6261	Relay Connector - 4P	63-107
1102 6266	Relay Connector - 9P	63-114
1102 6297	Connector - 4P	85-103
1102 6297	Connector - 4P	79-106
1102 6299	Connector - 6P	79-107
1102 6301	Connector - 8P	79-108
1102 6305	Connector - 12P	79-109
1102 6311	Connector - 4P	79-110
1102 6334	Connector - 3P	79-111
1102 6337	Connector - 6P	79-112
1102 6340	Connector - 9P	79-113
1102 6341	Connector - 10P	79-114
1102 6342	Connector - 11P	79-115
1102 6395	Connector - 1P	79-116
1102 6400	Connector - 2P	79-117
1102 6401	Connector - 2P	79-118
1102 6896	Connector - 50P	79-119
1102 6943	Relay Connector -10p	63-113
1102 7132	Card Slot - 68p	85-104
1102 7196	Connector - 50P	85-105
1102 7389	Connector - FH12-50S-0.5SV	85-106
1102 7456	Connector 176125-5	85-107
1102 7672	Connector - 54111-1615	59-110
1102 7692	Connector - WR-120S-VFH30-1	85-108
1102 7700	Connector - 50P	79-120
1102 7701	Connector - 50P	85-109
1102 7702	Connector - 60P	85-110
1103 1878	Receptacle - 9067	79-121
1104 0588	Dip Socket - 28p	85-111
1104 0739	Simm Socket 72p	85-112

Part No.	Description	Page and Index No
1105 0162	Locking Support	19-104
1105 0229	Clamp	67-108
1105 0229	Clamp	53-106
1105 0229	Clamp	55-107
1105 0229	Clamp	63-103
1105 0267	Harness Clamp - YMC-10-0	65-104
1105 0267	Harness Clamp - YMC-10-0	67-107
1105 0267	Harness Clamp - YMC-10-0	59-105
1105 0267	Harness Clamp - YMC-10-0	27-104
1105 0283	Clamp	29-106
1105 0283	Clamp	31-105
1105 0290	Harness Clamp - HORIZONTAL	67-104
1105 0290	Harness Clamp - HORIZONTAL	65-105
1105 0291	Harness Clamp - LWS-3S	67-105
1105 0291	Harness Clamp - LWS-3S	55-103
1105 0291	Harness Clamp - LWS-3S	61-101
1105 0292	Wire Saddle	21-106
1105 0292	Wire Saddle	61-104
1105 0310	Harness Clamp - LWS-1S	21-107
1105 0310	Harness Clamp - LWS-1S	67-102
1105 0310	Harness Clamp - LWS-1S	59-107
1105 0310	Harness Clamp - LWS-1S	61-103
1105 0310	Harness Clamp - LWS-1S	63-106
1105 0328	Harness Clamp - ES-0505	57-103
1105 0328	Harness Clamp - ES-0505	55-104
1105 0328	Harness Clamp - ES-0505	53-108
1105 0329	Clamp - ES-0510	57-104
1105 0329	Clamp - ES-0510	67-106
1105 0349	Edge Saddle	57-105
1105 0349	Edge Saddle	67-103
1105 0349	Edge Saddle	65-103
1105 0349	Edge Saddle	25-102
1105 0409	Spacer	21-110
1105 0437	Locking Support - FGS-4S	61-108
1105 0460	Clamp	21-113

Part No.	Description	Page and Index No.
1105 0460	Clamp	21-109
1105 0484	Clamp	69-104
1107 0472	Circuit Breaker - W28XQ1A 8A 25V (230V)	61-110
1107 0906	Fuse - 4A 125V	61-112
1107 0907	Fuse - 6.3A 125V	61-111
1107 0910	Fuse - 2A 125V	61-113
1107 0919	Fuse - 8A 125V	61-114
1107 0920	Fuse - 6.3A 250V	61-111
1107 0921	Fuse - 4A 250V	61-112
1107 0922	Fuse - 2A 250V	61-113
1107 0979	Fuse - 8A 250V	61-114
1204 1537	Dip Switch	79-122
1204 2466	Micro Switch - V-16506-1C25	55-108
1204 2466	Micro Switch - V-16506-1C25	63-101
1204 2466	Micro Switch - V-16506-1c25	59-103
1204 2468	Switch - AC250/16A	63-102
1400 0392	Transistor - DTC114EK	85-113
1400 0398	Transistor - 2SC2412K	85-114
1400 0459	Transistor - DTC143XKA	85-115
1400 0556	Transistor - DTB143EK	79-123
1400 0558	Transistor - 2SD780	79-124
1402 0477	Silicon Diode - 1SS187	85-116
1402 0478	Diode - 1SS226TE85L	79-125
1402 0942	Diode - 1SS193	79-126
1402 1037	Diode - U1ZB12	79-127
1402 1122	Diode - MA159A	79-128
1402 1345	Diode - UDZ3.6B	85-117
1402 1380	Diode - PTZ6.2A	79-129
1402 1380	Diode - PTZ 6.2A	85-118
1403 0828	Diode - SEC1901C	85-119
1403 0829	Diode - SEC1201C	85-120
1404 0238	Serge Absorber 22V 0.6J	79-130
1407 1535	IC - TD62308AP	79-131
1407 1596	TTLIC SN74LS14NS	79-132
1407 2143	TTLIC - 74F244SJ	85-121

Part No.	Description	Page and Index No
1407 2187	TTLIC SN74LS07NS	79-133
1407 2187	TTLIC - SN74LS07NS	85-122
1407 2218	TTLIC - SN74LS06NS	85-123
1407 2219	IC - TD62003AP	79-134
1407 3008	TTL - SN74ALS244CNS	85-124
1407 3021	TTL SN74ALS139NS	85-125
1407 3206	IC - TC7S32F	85-126
1407 3281	IC - TC74HCU04AF	79-135
1407 3290	IC - TC74HC02AF	79-136
1407 3380	HS-C2MOS - TC74HCT04AF	79-137
1407 4114	HS-C2MOS - TC74HCT04AF	79-138
1407 4322	IC - TD74ABT374F	85-127
1407 4755	IC - MBM29F800T-12PFTN	85-128
1407 4771	CPU MC68334GFC16	85-129
1407 5009	CMOS TC7SET04FU	85-130
1407 5031	IC - MBM29F400TA-90PFTN	85-131
1408 0575	IC - M51957BFP	85-132
1408 0770	IC - L293D	79-139
1408 0877	Comparator - LM339NS	79-140
1408 0920	Opeamp - NJM2902E	79-141
1408 1266	Regulator - LT1086CM-3.3	85-133
1503 0261	Oscillator - 9.8304MHZ	79-142
1503 0460	Oscillator - 32.768KHZ	85-134
1503 0784	Oscillator - MA-406 19.6608M	85-135
1503 0813	Oscillator - 40MHZ	85-136
1600 1178	Resistor Array - 330Ω ±5% 1W	79-143
1601 7724	Resistor - 680 Ω MNR14J681	85-137
1601 7800	Resistor Array - 1KΩ ±5% 1/16W	79-144
1601 7800	Resistor Array - 1KΩ ±5% 1/16W	85-138
1601 7801	Resistor Array - 10KΩ ±5% 1/16W	79-145
1601 7801	Resistor Array - 10KΩ ±5% 1/16W	85-139
1601 7805	Resistor Array - 33 Ω ±5% 1/16W	85-140
1601 7807	Registor Array -3.3k Ω -5% 1/16W	85-141
1601 7808	Registor Array - 4.7K Ω ±5% 1/16W	85-142

Part No.	Description	Page and Index No.
1601 7809	Registor Array - 2.2K Ω ±5% 1/16W	85-143
1604 2601	Condensor - 47mF ±20% 25V	79-146
1604 4333	Capacitor - 100µF ±20% 10V	85-144
1605 0577	Capacitor - 0.33µF +80-20%	85-145
1605 0847	Capacitor - 7PF ±0.5pF 50V	85-146
1605 0869	Capacitor - 820pF ±10%	85-147
1607 0280	Inductor - Blm41	85-148
1607 0644	Ferrite Core - BCN-26	19-106
1607 0732	Noise Filter - AEF321825-470	85-149
1607 0847	Data Line Filter - ACB1608H-300	85-150
1607 0927	Filter - ACF321825-220	85-151
1607 1002	Filter - NFM60R30T222	79-147
1607 1004	Filter - ACF321825-151	85-152
1607 1017	Filter - MMZ1608R301A	85-153
1607 1022	Filter - MMZ1608Y301B	85-154
1607 1023	Filter - MZA3216Y301B	85-155
1607 1031	Filter - ACB1608L-060	85-156
1607 1044	Filter - MMZ1608S102A	85-157
1630 1121	Resistor - 120Ω±5% 1/8W	79-148
1630 1221	Resistor - 220 Ω ±5% 1/4W	79-149
1630 2221	Resistor - 220 Ω	79-150
1630 3100	Resistor - 10 Ω ±5% 1/10W	79-151
1630 3102	Resistor - 1KΩ 1/10W ±5%	79-152
1630 3103	Resistor - 10KΩ 1/10W ±5%	79-153
1630 3105	Resistor - 1M Ω ±5% 1/10W	79-154
1630 3152	Resistor - 1.5KΩ - 1/10W	79-155
1630 3154	Resistor - 150K 0HM ±5% 1/10W	79-156
1630 3161	Resistor - 160Ω 1/10W ±5%	79-157
1630 3204	Resistor - 200K Ω 1/10W ±5%	79-158
1630 3222	Resistor - 2.2KΩ 1/10W ±5%	79-159
1630 3223	Resistor - 22KΩ - 1/10W	79-160
1630 3330	Resistor - 33 Ω ±5% 1/10W	79-161
1630 3332	Resistor - 3.3KΩ 1/10W ±5%	79-162

Part No.	Description	Page and Index No
1630 3362	Resistor - 3.6K Ω ±5% 1/10W	79-163
1630 3471	Resistor - 470Ω - 1/10W	85-158
1630 3471	Resistor - 470Ω - 1/10W	79-164
1630 3472	Resistor - 4.7KΩ 1/10W ±5%	79-165
1630 3511	Resistor - 510 Ω ±5% 1/10W	85-159
1630 3511	Resistor - 510 Ω ±5% 1/10W	79-166
1630 3562	Resistor - 5.6K Ω +5% 1/10W	79-167
1630 3681	Resistor - 680 Ω ±5% 1/10W	79-168
1630 3752	Resistor - 7.5K Ω ±5% 1/10W	79-169
1630 4100	Resistor - 10 Ω ±5% 1/16W	85-160
1630 4101	Resistor - 100 Ω ±5% 1/16W	85-161
1630 4102	Resistor - 1.0KΩ ±5% 1/16W	85-162
1630 4103	Resistor - 10KΩ ±5% 1/16W	85-163
1630 4105	Resistor - 1.0MΩ ±5% 1/16W	85-164
1630 4106	Resistor - 10M Ω ±5% 1/16W	85-165
1630 4151	Registor - 150 Ω ±5% 1/16w	85-166
1630 4222	Registor - 2.2k Ω - ±5%	85-167
1630 4223	Registor - 22k Ω - ±5% - 1/16w	85-168
1630 4301	Resistor - 300 Ω ±5% 1/10W	85-169
1630 4330	Resistor - 33 Ω ±5% 1/8W	85-170
1630 4332	Resistor - 3.3K Ω ±5% 1/16W	85-171
1630 4334	Resistor - 330K Ω ±5% 1/16W	85-172
1630 4472	Resistor - 4.7KΩ ±5% 1/16W	85-173
1630 4680	Resistor - 68 Ω ±5% 1/16W	85-174
1630 4681	Resistor - 680 Ω ±5% 1/16W	85-175
1630 4751	Resistor - 750 Ω ±5.00% 1/16W	85-176
1631 0000	Resistor - 0 Ω 1/4W	79-170
1631 1000	Resistor -100 Ω ±1% 1/4W	79-171
1633 1003	Resistor - 100K Ω ±1% 1/10W	79-172
1633 1403	Resistor - 140K Ω ±1% 1/10W	79-173
1633 2402	Resistor - 24K Ω ±1% 1/10W	79-174
1633 4641	Resistor - 4.6K Ω ±1% 1/10W	79-175

Part No.	Description	Page and Index No.
1633 5231	Resistor - 5.23K Ω ±1% 1/10W	79-176
1633 5621	Resistor - 6.2K Ω ±1% 1/10W	79-177
1633 7150	Resistor - 715 Ω ±1% 1/10W	79-178
1634 1002	Resistor - 10 Ω ±5% 1/16W	85-177
1634 3921	Resistor - 3.92KΩ ±1% 1/1	85-178
1640 2470	Capacitor - 47µF ±20% 25V	79-179
1640 5101	Capacitor - 100µF ±20% 50V	79-180
1640 5470	Capacitor - 47µF ±20% 50V	79-181
1644 0100	Capacitor - 10µF ±20% 10V	85-179
1644 0470	Capacitor - 47µF ±20% 10V	85-180
1644 5100	Capacitor - 10µF ±20% 50V	85-181
1660 0100	Capacitor - 10PF ±0.5pF 50V	85-182
1660 2101	Capacitor - 100pF - ±10% - 50V	85-183
1660 2150	Capacitor - 15pF ±5% 50V	85-184
1660 2220	Capacitor - 22pF ±20% 35V	85-185
1660 2330	Capacitor - 33pF - ±5% - 50V	85-186
1660 2470	Capacitor - 47pF ±5% 50V	85-187
1660 3101	Capacitor - 100pF 50V	79-182
1660 3102	Capacitor - 1000pF ±5% 50V	79-183
1660 3220	Capacitor - 122pF ±5% 50V	79-184
1660 3270	Capacitor - 27pF ±5% 50V	79-185
1660 3331	Capacitor - 330pF ±5% 50V	79-186
1660 3471	Capacitor - 470pF 50V	79-187
1660 3820	Capacitor - 82pF ±5% 50V	79-188
1660 4102	Capacitor - 1000pF ±10% 50V	85-188
1660 4222	Capacitor - 2200pF - ±10% - 50V	85-189
1660 5472	Capacitor - 4700pF 50V	79-189
1660 6103	Capacitor - 10000pF - +80%-20%, 50V	85-190
1660 7103	Capacitor - 10000pF 50V	79-190
1660 7104	Capacitor - 100000pF 50V	79-191
1660 8104	Capacitor - 0.1µF +80-20% 25V	85-191
1901 0022	IC - Dram - 4M - 256X16 - 70NS	85-192
1903 0014	IC - 16M 1MX16 60NS G2	85-193

Part No.	Description	Page and Index No